JURALCO

JURALCO VIKING® BALUSTRADE SYSTEM

ISSUE 10-26 v1

Juralco Viking® Balustrade showing Full Height glass with Handrail and Bottom Rail

Juralco Viking® Balustrade showing Full Height glass
with Handrail and Bottom Rail

Juralco Viking® Balustrade showing Baluster type

Juralco Viking® Balustrade showing Full Height glass
with Handrail and Bottom Rail

All pages © Copyright Juralco Aluminium Building Products Ltd, 2024

Complies With AS/NZS 1170:2002, NZS 4223.3.2016, NZ Building Code B1, B2, F2 ,F4 and F9

Viking® Balustrade is for Occupancy types A, A Other and C3 only
Occupancy Types as per AS/NZ 1170.1.2002.

Code	Type of Occupancy for part of the building or structure	Specific Uses	Glass
A	Domestic and Residential activities	All areas within or serving exclusively one dwelling including stairs, landings etc, but excluding external balconies and edges of roofs.	6mm and 10mm Toughened Glass
A Other, C3	Areas without obstacles for moving people and not susceptible to over crowding	Stairs, landings, external balconies, edges of roofs etc.	

Note 1	**All for 6mm and 10mm, Toughened Glass. Glass must have a minimum strength of 100MPa. All edges polished**
Note 2	**Juralco Balustrade Systems building code compliance documentation requires all balustrade installations are to be completed in accordance with the requirements of our authorised installer certification.**
Note 3	**All Semi Frameless glass Balustrades must have a Top or Side mounted handrail to conform to NZS 4223.3.2016.**

masterspec partner
Section 4852JB

Index

Heading	Pages	Description.
Specifications	4	Juralco standard Specification sheet and Powder coating recommendations
Configurations	5 - 7	Shows typical Glass and Baluster Balustrade layouts
Materials	8 - 13	Shows all Extrusions and components
Viking Gates	14 - 16	Shows Gate Components and Glass, Baluster layouts
Interlinking Rail	17	Shows the Interlinking Rail mounter to a JEC29 Bracket
Design Guide	18 - 19	Balustrade Height and Post Spacing for differing Building Areas
Constructions	20 - 21	Shows Typical Joints
Assemblies	22 - 25	Shows Typical Assemblies
Post Mount Types	26	Shows the Three Post mount types
Mountings	27 - 46	Shows Mounting details - For Timber (p27-31), Steel (p28-37) and Concrete (p38-46)
	47 - 52	Shows Mounting details. Older Timber structures pre NZS3604:2011
Post to Rail	53	Shows Post to Rail connections
Setouts. Glass and Baluster	54 - 71	Setouts for 6mm Glass (p54-59), 10mm Glass (p60-65), 17mm Baluster (p66-71)
Corners. Glass and Baluster	72 - 73	Setouts for 6mm and 10mm Glass (p72), 17mm Baluster (p73)
Surface Care	74 - 75	Instructions for the care of Powder coated and Glass surfaces

Juralco Aluminium Building Products Ltd (JABP)

Specifications for Juralco Viking® Balustrade System

1.Scope

- This specification details the documents the Juralco Viking® Balustrade System refers to in relation to the New Zealand Building Code, the manufacturer's documents, products used in the System, requirements in relation to fixing and surface finishings.

2. NZBC Compliance

- The Juralco Viking® Balustrade System has been reviewed by Lautrec Technology Group Ltd, to demonstrate compliance with the structural requirements of the New Zealand Building Code and AS/NZS 1170 : 2002 occupancy A, A Other and C3. NZS 3604 Wind Zones, up to and including Low, Medium, High, Very High and Extra High.
- The Structural Engineering design includes the requirements of B1 Structure, B2 Durability, F2 Hazardous Materials and F4 Safety from falling, from the Building Code.
- Verification Method B1 / VM1, B2/AS1, F4 / AS1
- All glass used in the Juralco Viking® Balustrade System must conform to AS/NZS 2208.
- Complies with NZS 4223.3.2016

3. Manufacturer's Documents

- The Juralco Viking® Balustrade System manual details all extrusions and components used for the fabrication and installation/fixing of the system.
- A Producer Statement 1(Design) is available.
  Copies of the above documents are available from:
  Juralco Aluminium Building Products Ltd
  48 Bruce McLaren Rd, Henderson, Auckland
  Phone 09 478 8018 Fax 09 478 7883 Email specify@juralco.co.nz
- Any deviation from the standard fabrication or installation/fixing must be accompanied by a site specific PS1 with site specific calculations and drawings

4. Products

- Only extrusions, components and hardware supplied by or specified by JABP may be used in the Juralco Viking® System
- Aluminium extrusions, components and hardware – unless specified are manufactured to 6060 T5 or T6 specifications
- Stainless Steel components, hardware, fixings – all components to 316 grade
- Glass - all glass used in the Juralco Viking® Balustrade System must conform to the specifications as listed in the Juralco Viking® manual with each panel conforming to AS/NZS 2208 as confirmed by the Safety Stamp detailing the manufacturer's description and licence number.

5.Surface Finishing

- Juralco Aluminium Building Products Ltd is a Dulux Registered Applicator site, registration number 2101. JABP uses only Dulux branded powder coating materials
- Dulux Duralloy® powder coating systems are suitable for properties greater than 100m from high tide level AAMA 2603 performance. Residential buildings, 3 levels max. Warranty 10 yrs
- Dulux Duralloy Plus® powder coating systems are suitable for properties greater than 10m from high tide level. AAMA 2603 performance. Residential and Light commercial buildings, 3 levels max Warranty 15 yrs
- Dulux Duratec® powder coating systems are suitable for properties greater than 10m from high tide level AAMA2603 and 2604 performance. All Residential and Commercial buildings. Warranty 25 yrs

6. Installation and Fixing

- The Juralco Viking® Balustrade System must only be installed in accordance with the Juralco Viking® Balustrade System manual
- Any deviation from that specified in the Juralco Viking manual must only be in accordance with the site specific PS1 with site specific calculations and drawings listing the non standard details
- The Juralco Viking® Balustrade System must only be fabricated/installed by a Juralco approved fabricator
- Upon completion of the installation the fabricator must supply the owner with a PS3 (Construction)

Important information - Powder Coating systems.

Powdercoat Systems The new standard Dulux powder coating system used by Juralco is Duralloy Plus®. Also Duralloy® and Duratec®. All as per specs above. Juralco Powder coated prices are for Duralloy Plus® and Duralloy® (same pricing). Duratec® prices on application.

Attachment to structures A PVC Tape or similar material spacer must be used to separate powder coated aluminium items from all concrete and steel structures. Failure to do so can lead to the chemicals in the structure affecting the powder coating, leading to corrosion.

Swimming Pools The chlorinated water in swimming pools can cause the deterioration of powder coated surfaces, leading to corrosion of the underlying surface. It is recommended that Powder coated surfaces be 1200mm min from a pool.

Care The Dulux powder coating warranty period is conditional upon the surface being maintained in accordance with the Dulux 'Care and Maintenance Instructions'. Download from Dulux or refer to the back page of this manual.

For 6mm Toughened Glass

6mm Glass - Full Height. Handrail + Split Rails.
Balustrade Height, 1000mm **min,** above FFL

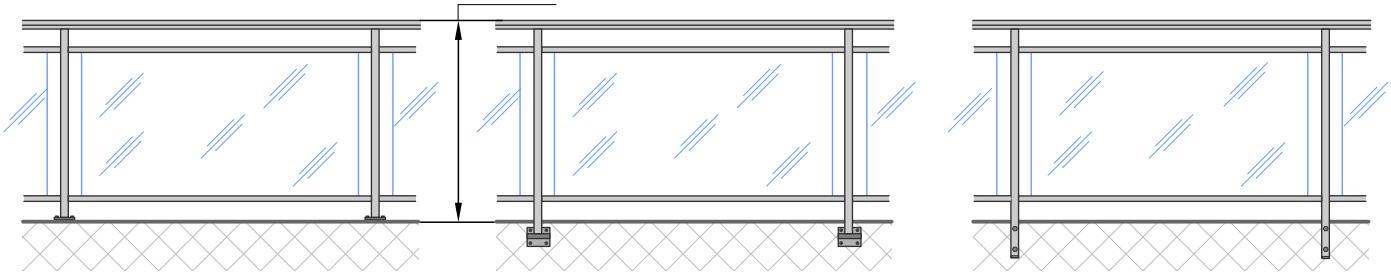

Top Mount | **Gutter Brkt Face Fix** | **Face Fix**

6mm Glass - Full Height. Handrail
Balustrade Height, 1000mm **min,** above FFL

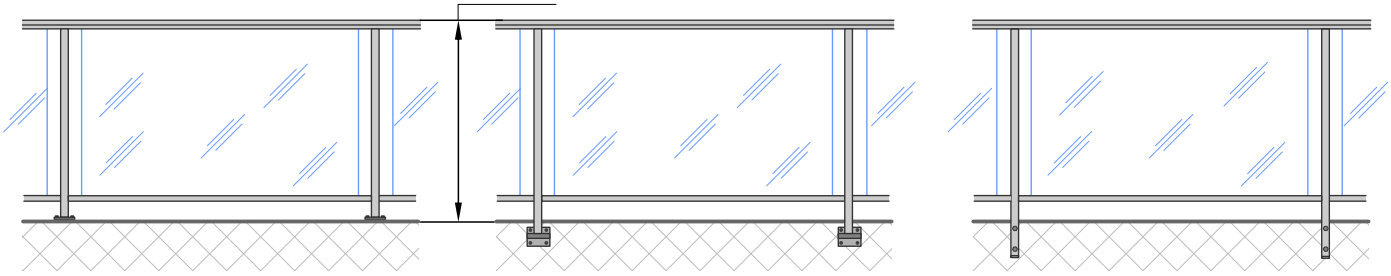

Top Mount | **Gutter Brkt Face Fix** | **Face Fix**

For 10mm Toughened Glass

10mm Toughened Glass - Semi Frameless.w Handrail

Balustrade Height, 1000mm **min,** above FFL

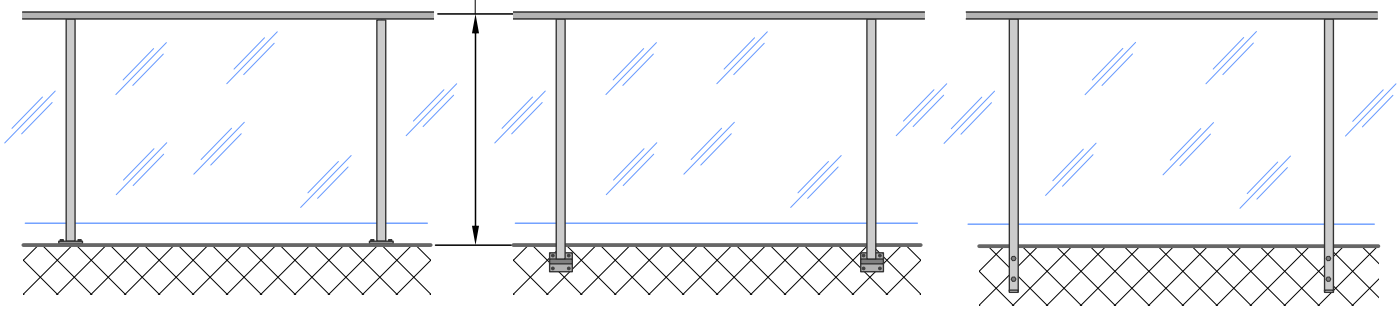

Top Mount
A Corner Post is available for Top Mount only

Gutter Brkt Face Fix

Face Fix

10mm Toughened Glass - Semi Frameless - JEB 222 Interlinking Rail + JEC29 Brackets, Deck side.

Balustrade Height, 1000mm **min,** above FFL

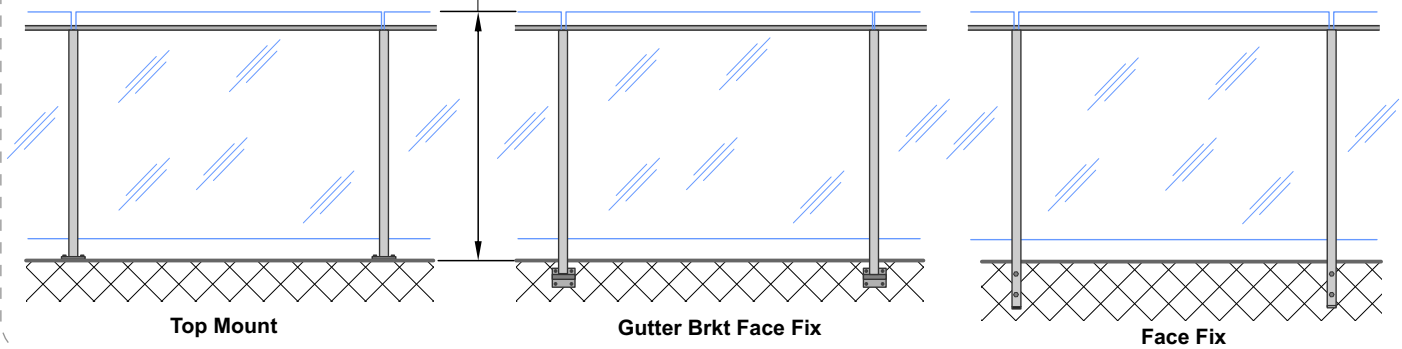

Top Mount | **Gutter Brkt Face Fix** | **Face Fix**

For 17mm Baluster

17mm Baluster - Split Rail. Handrail + Top and Bottom Rail.

Balustrade Height, 1000mm min,1275mm max above FFL.

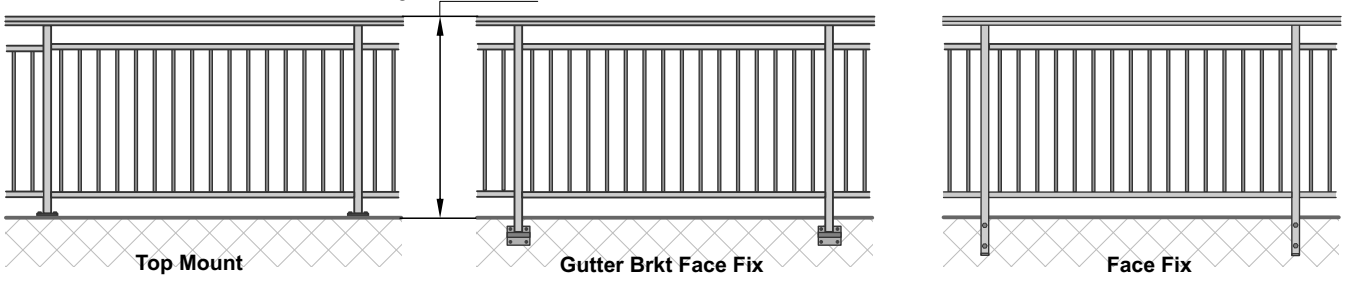

17mm Baluster - Full Height. Handrail + Bottom Rail.

Balustrade Height, 1000mm min,1275mm max above FFL.

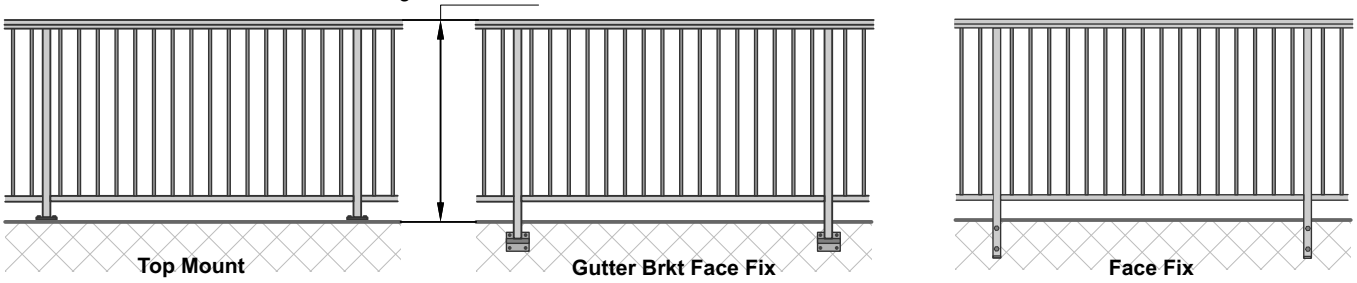

For JA/160 50mm dia Aluminium Tube + wall Brackets

Handrail Bracket JVB116
(Curved, Side Fix)

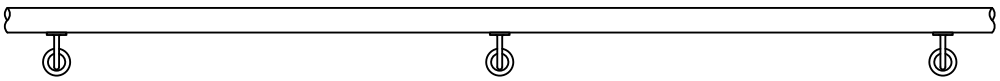

Handrail - Wall mount. Could be Horizontal or for Stairway

Handrail Bracket JVB117
(80mm Top fix)

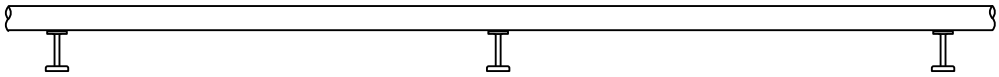

Handrail - Nib Wall mount. Could be Horizontal or for Stairway

Juralco Viking® Balustrade System Stair Setouts, Construction

Viking Balustrade
Face Fix shown

Typical Stair installation
Fixings into Single or Double Joists/Stiffeners, Concrete or Steel

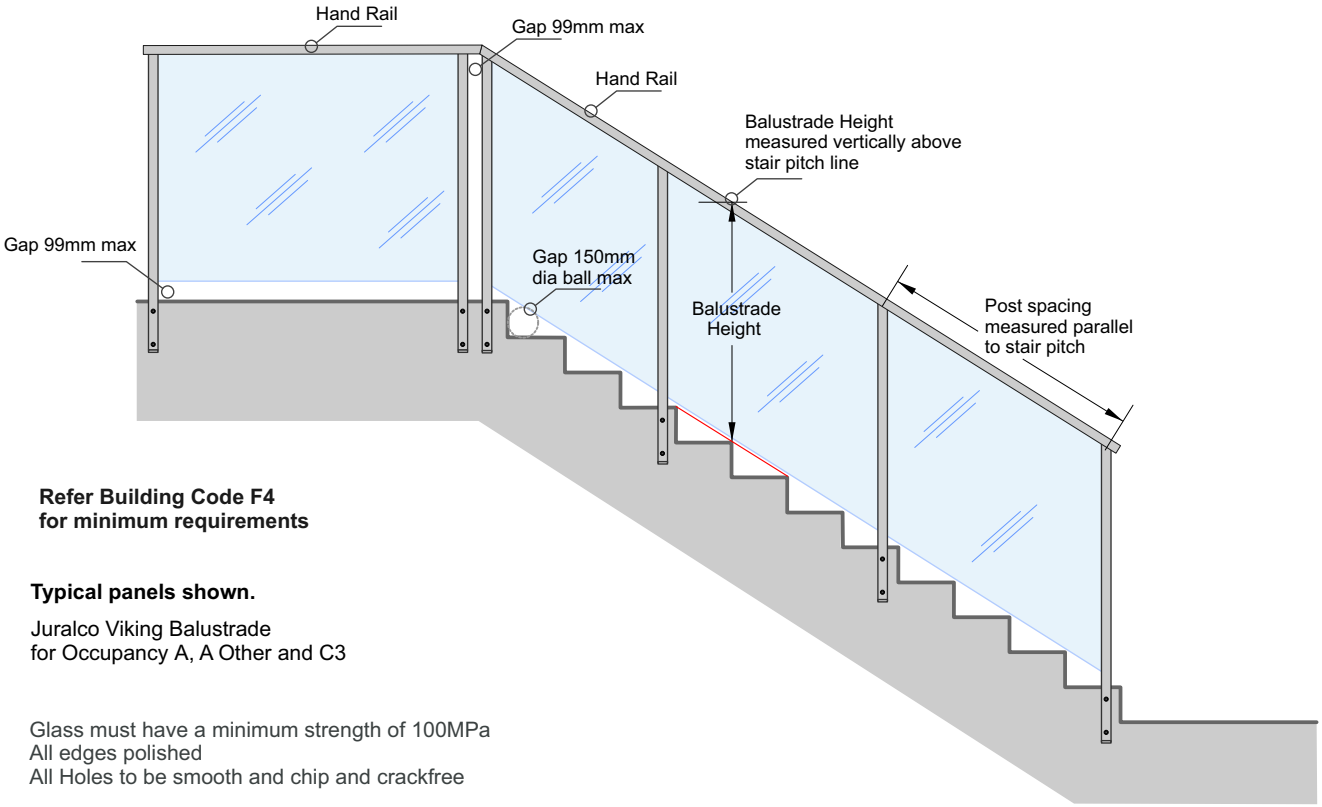

Refer Building Code F4
for minimum requirements

Typical panels shown.

Juralco Viking Balustrade
for Occupancy A, A Other and C3

Glass must have a minimum strength of 100MPa
All edges polished
All Holes to be smooth and chip and crackfree

Viking Balustrade
Stair Stringer Detail

Stair structure to be designed by others to resist Balustrade actions as per NZS1170.1 Table 3.3
Applicable to Occupancy A only unless Project Engineer ensures it can support appropriate balustrade loads

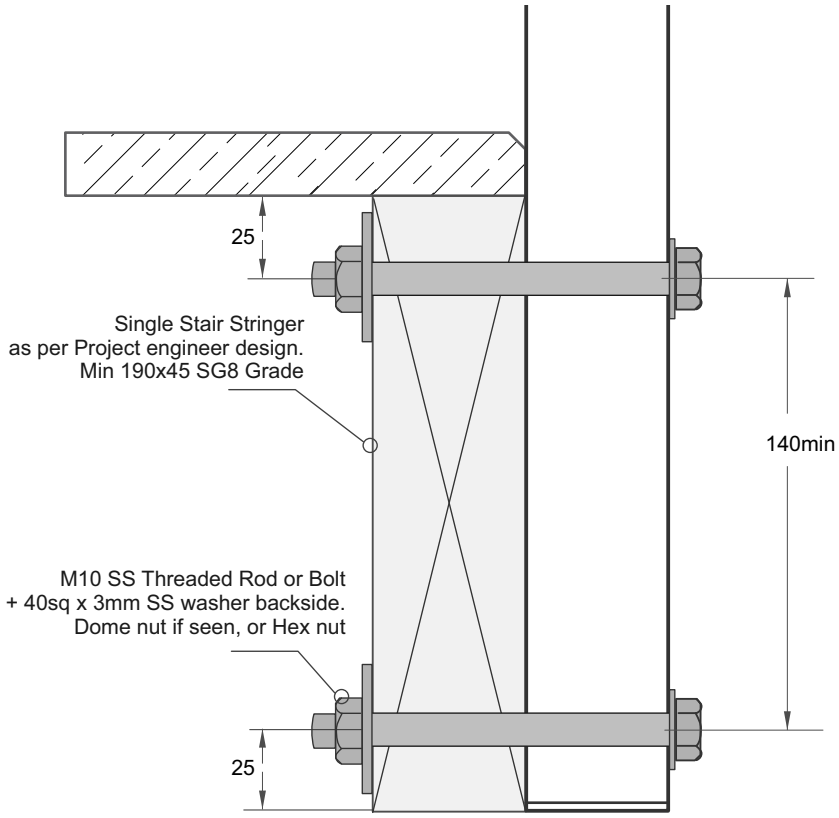

Extrusions

Handrails below suitable for Private and Common Stairways, but NOT suitable for Accessible Stairways

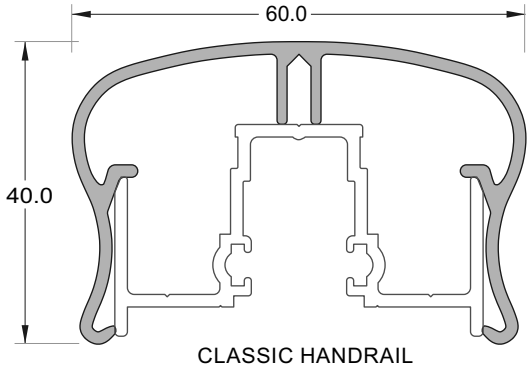

CLASSIC HANDRAIL
JVB/001/5.8

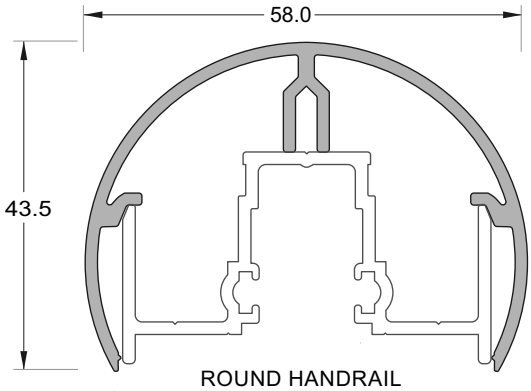

ROUND HANDRAIL
JVB/009/5.8

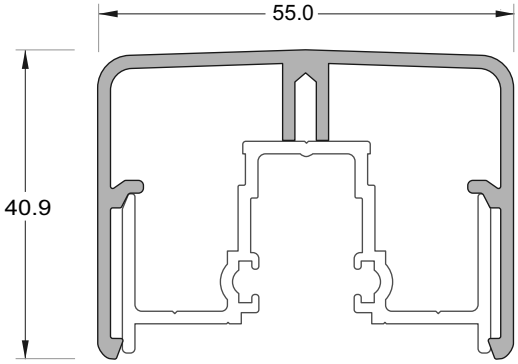

RECTANGULAR HANDRAIL
JVB/016/5.8

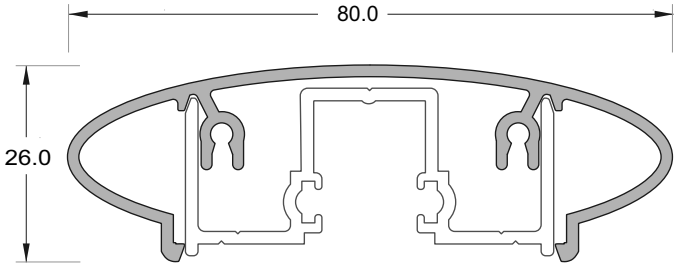

ELLIPTICAL HANDRAIL
JVB/024/5.8

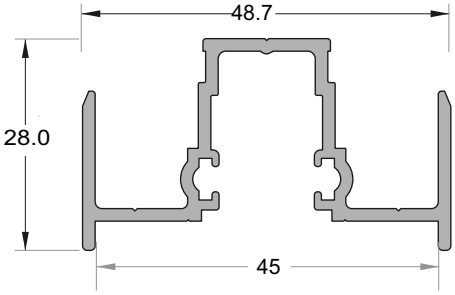

TOP RAIL
JVB/004/5.8

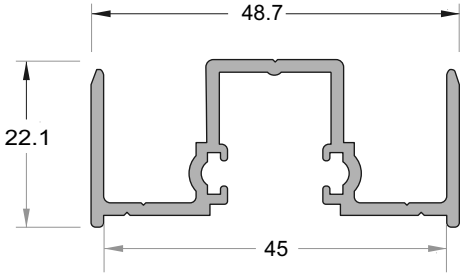

ELLIPTICAL TOP RAIL
JVB/023/5.8

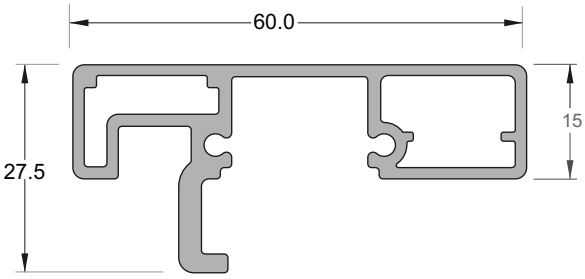

INTERLINKING RAIL
JEB/222/5.8

Note - For use with JEC 29 Handrail Bracket
- Infill clips not used with the JEB 222

Extrusions

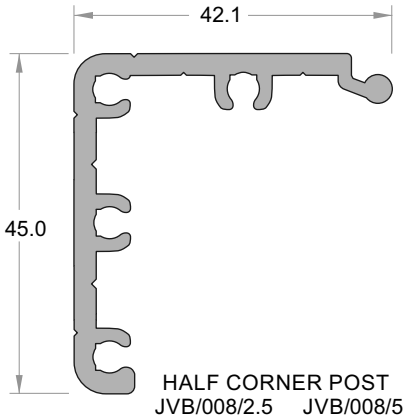

HALF CORNER POST
JVB/008/2.5 JVB/008/5

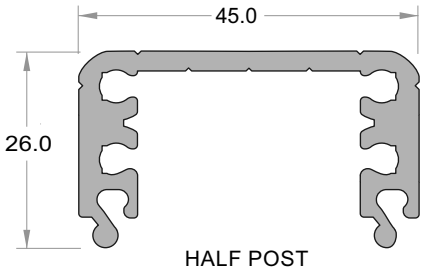

HALF POST
JVB/007/2.5 JVB/007/5

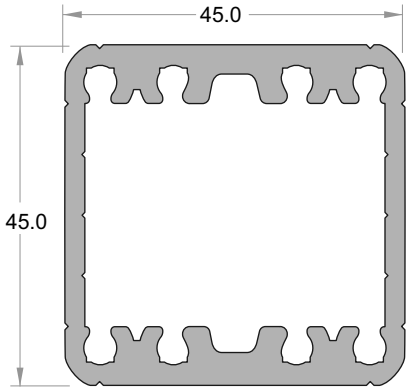

ONE PIECE POST
JVB/015/2.5 JVB/015/5

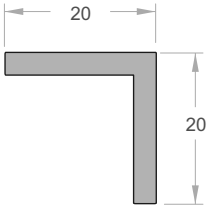

WATER DEFLECTION ANGLE
JA118/5

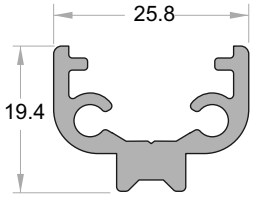

SPIGOT
JVB/017/5
(Fits Bottom Rail)

POST STIFFENER
JVB/013/5

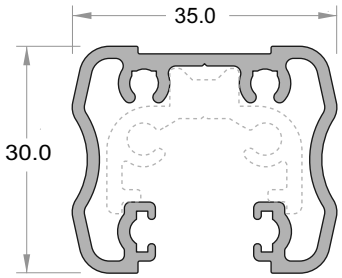

BOTTOM RAIL
JVB/002/5.8

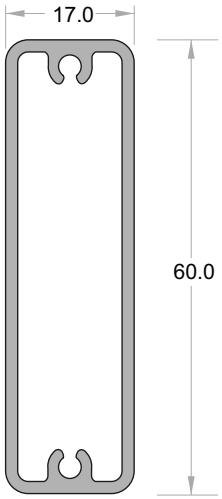

INFILL
60mm SLAT
JVB/019/5.3

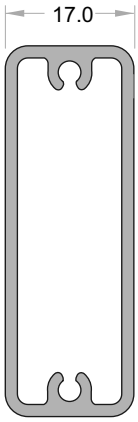

INFILL
49mm SLAT
JVB/018/5.35

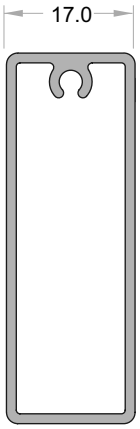

INFILL
49mm SLAT
(Single Screw)
JVB/030/5.35

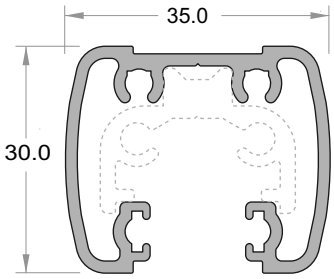

BOTTOM RAIL
JVB/022/5.8w

Extrusions

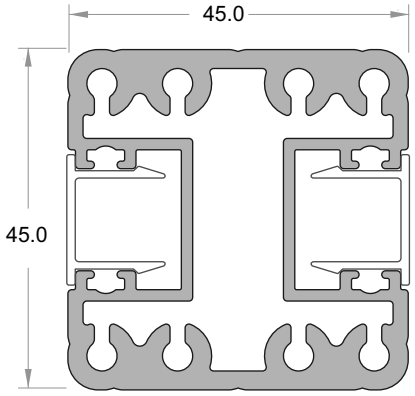

FRAMELESS POST
JVB/011/2.5 JVB/011/5

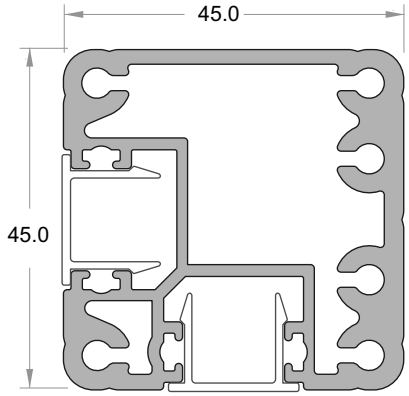

FRAMELESS CORNER POST
JVB/012/2.5 JVB/012/5

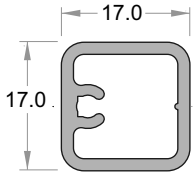

BALUSTER
JVB/005/5.35

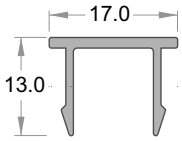

FRAMELESS POST CAP
JVB/006

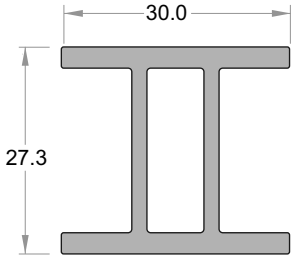

SEMI FRAMELESS
POST STIFFENER
JVB/020/5

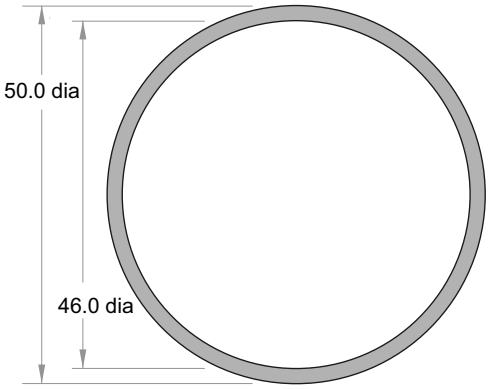

HANDRAIL
JA160/5

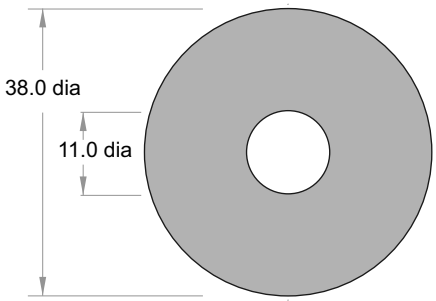

SPACER LENGTH
JVB/125/1000

Components

Base Plate JVB100

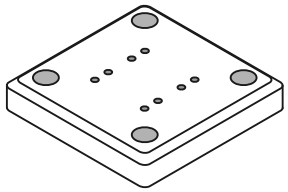

100mm x 100mm x 12mm - 4 x holes

Base Plate JVB100/Blank

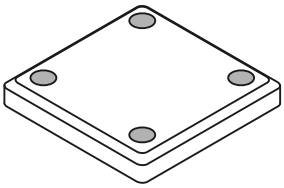

100mm x 100mm x 12mm - 4 x holes

Base Plate JVB121

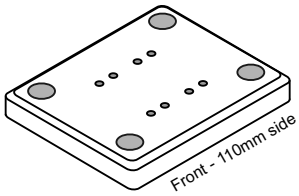

110mm x 90mm x 12mm - 4 x holes

Base Plate JVB121/Blank

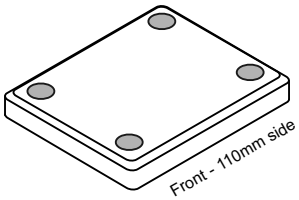

110mm x 90mm x 12mm - 4 x holes

Gutter Bracket JVB137/45

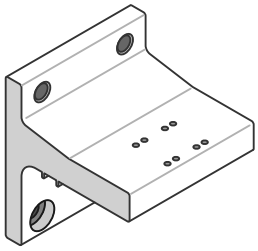

120mm wide x 135mm high

Base Plate JVB101

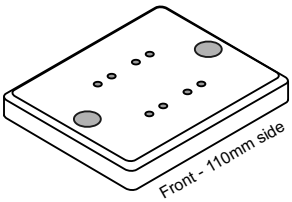

110mm x 90mm x 12mm - 2 x holes

Base Plate JVB101/Blank

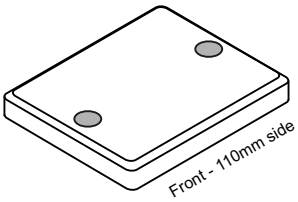

110mm x 90mm x 12mm - 2 x holes

Gutter Bracket Spacer JEC139

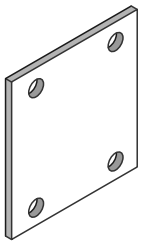

135mm x 120mm x 5mm - 4 x holes

Juralco Viking® Balustrade System

Components

Handrail Corner Joiner 90deg
JVB150

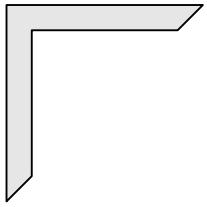

Legs 70mm long x 9mm wide
x 3mm thick

Handrail Corner Joiner 90deg
JVB151

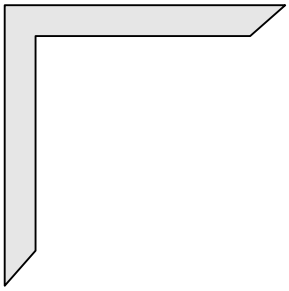

Legs 100mm long x 11mm wide
x 3mm thick

Handrail Corner Joiner 135deg
JVB152

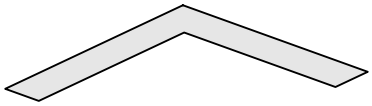

Legs 70mm long x 11mm wide
x 3mm thick

Classic End Cap
JVB105

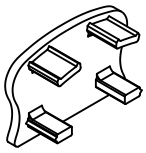

Round End Cap
JVB113

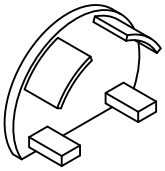

Rectangular End Cap
JVB129

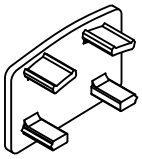

Elliptical End Cap
JVB140

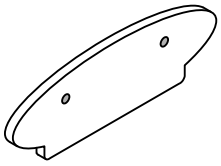

Top Rail Wall Bracket
4.5mm thick JVB103

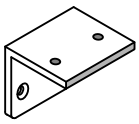

Glass Setting Angle
JVB118

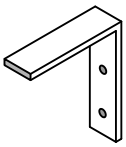

30mm x 30mm Angle x 12mm wide

Frameless Post-top Cap
JVB115

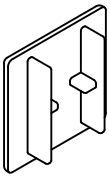

Post End Cap
JVB104

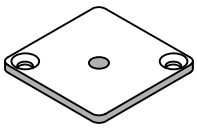

Bottom Rail Wall Bracket
3mm thick JVB102

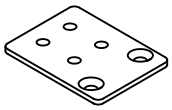

4mm Glass Setting Block
Part No JVB119

4mm x 8mm x 30mm long

Glazing Block 50mm
JVB108

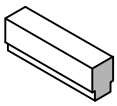

17mm x 9mm x 350mm long

Handrail Bracket JVB116
(Curved, Side Fix)

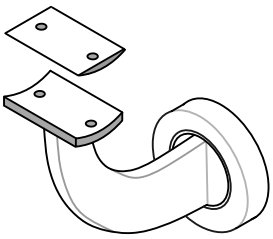

Satin or SCC finishes

Handrail Bracket JVB117
(80mm Top fix)

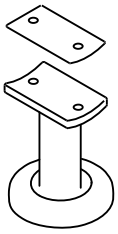

Satin or SCC finishes

50.8mm dia Handrail End Cap
JGS 132

SCC finishes

Juralco Viking® Balustrade System

Components

PK SCREW SS JVBScrew/10x6	PK SCREW SS JVBScrew/25x6	PK SCREW SS JVBScrew/38x6	PK SCREW SS JVBScrew/25x8	PK SCREW SS JVBScrew/25x10	PK SCREW SS JVBScrew/50x10
Top Rail to Handrail Pan SQ drive	Bottom Rail to Baluster Pan SQ drive	Top Rail to Baluster C/S SQ drive	Post to Bottom Rail Pan SQ drive	Top Rail to Post Pan SQ drive	Attaching Post to Base plate or Gutter Bracket C/S SQ drive. High Tensile

COACHSCREW SS JVBCoach/M10x160

COACHSCREW SS JVBCoach/M10x180

COACHSCREW SS JVBCoach/M10x200

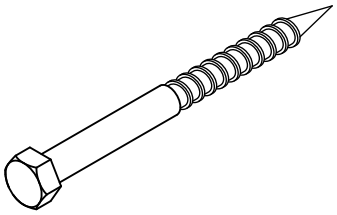

Square Washer JVBSqwsh/40x40x3

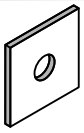

SS 40mm sq x 3mm

Round Washer JVBWasher/21x2

SS 21mmdiax11x2mm thick

All For M10 SS Coachscrews or Bolts

Face Fix Spacer JVB125/30mm	Face Fix Spacer JVB125/15mm	Face Fix Spacer JVB125/10mm	EPDM Washer JVB126	EPDM Washer JVB130
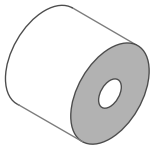	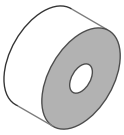			
Aluminium 38mm dia x 30mm long.	Aluminium 38mm dia x 15mm long.	Aluminium 38mm dia x 10mm long.	For M10 Fastener 38mm dia x 3mm	For M10 Fastener 20mm dia x 1.6mm

SIKA Supergrip JECSUPERGRIP30

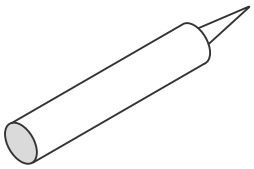

For All Coachscrews fixings

Rhodorsil V60 Clear Silicone H/RTV419098

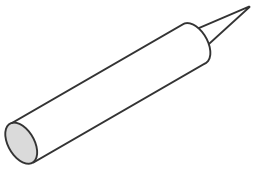

Construction Silicone

Foam Tape 100mm x 4.8mm JVB/FTAPE100

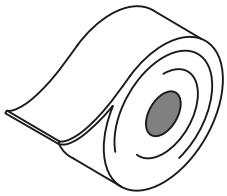

Base Plate Separator for Concrete and Steel Single sided 100mm wide x 15.2mt Roll

BULB SEAL JVB/Bulbseal

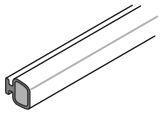

300m Roll, Black

GLAZING WEDGE JVBWedge/Brown

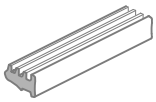

6mm Glass Wedge 75m Roll, Black

BACKING WEDGE JVB/BackWedge500

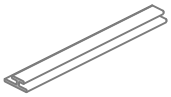

500m Roll, Black

Foam Tape 38mm x 4.8mm JVB/FTAPE38

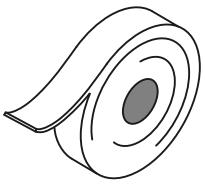

Face fix Post Separator for Concrete and Steel Single sided 38mm wide x 15.2mt Roll

HANDRAIL BRACKET KIT JEC 29/Kit

Includes 2 x grub screws (For use with Interlinking Rail Extrusion)

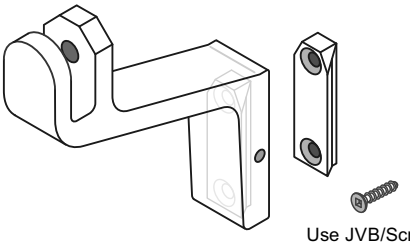

Use JVB/Screw 10gx20 C/S

Gate Components

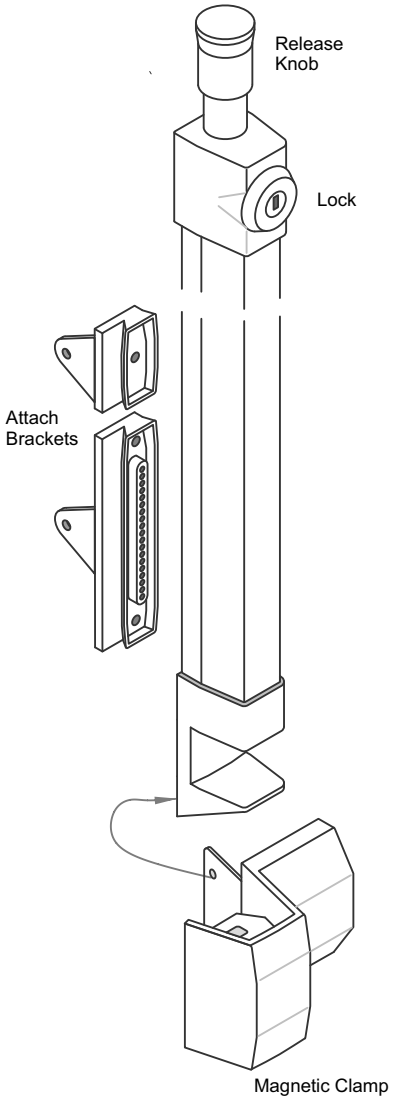

Latch - 540mm high OA

MAGNETIC POOL GATE LATCH
Nylon, Black
JEF/APL

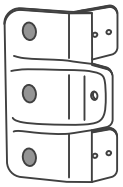

SOFT GATE STOP
Nylon, Black.
Part No JEF/GS

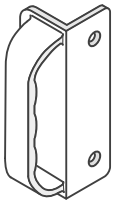

GATE HANDLE
Nylon, Black.
Part No JEF/GH

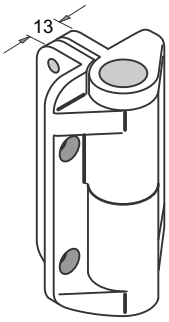

Suitable for Pool gates
Max Self Closing 45kg

ADJUSTABLE TENSION
HINGE, LEGS
JEF/AHHD (Pairs)

These Latches not suitable for Pool Gates

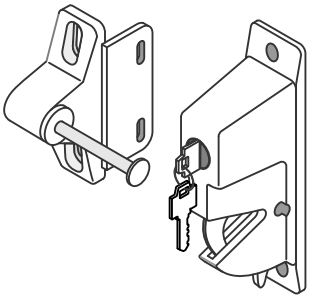

UNIVERSAL DROP LATCH
AND STRIKER
Nylon, Black
JEF/DL

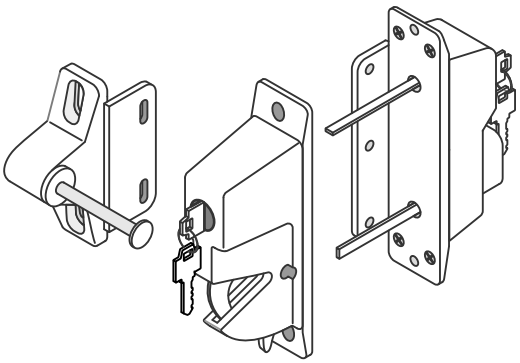

UNIVERSAL DROP LATCH
AND STRIKER
Nylon, Black. (External Access)
JEF/DLEA

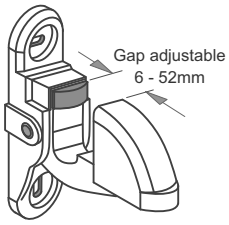

PARKING LATCH
Nylon, Black.
G21

Typical Gate Assembly - Glass

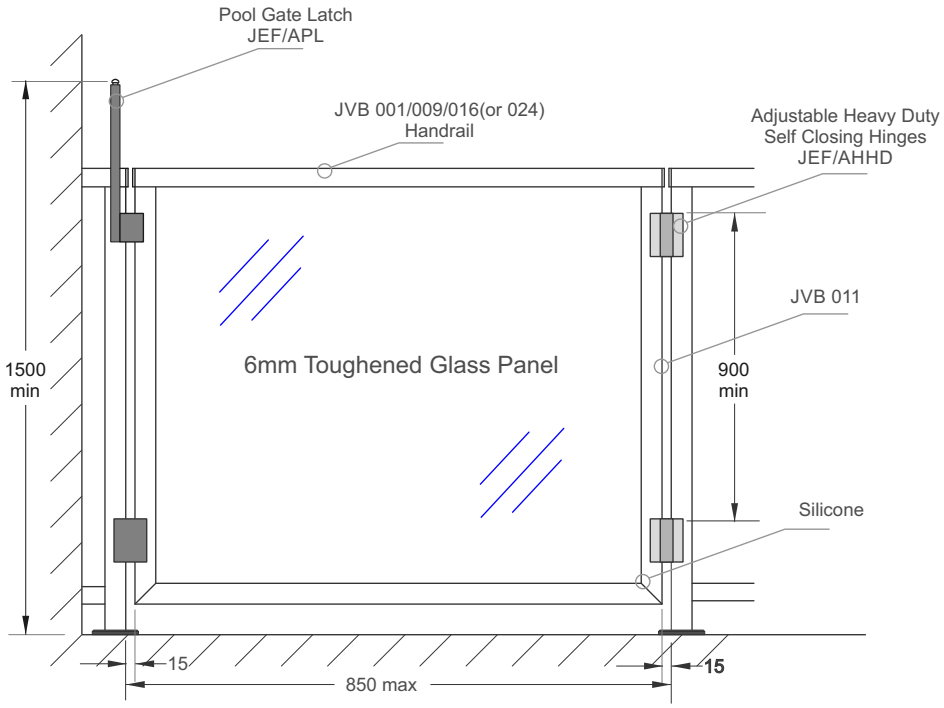

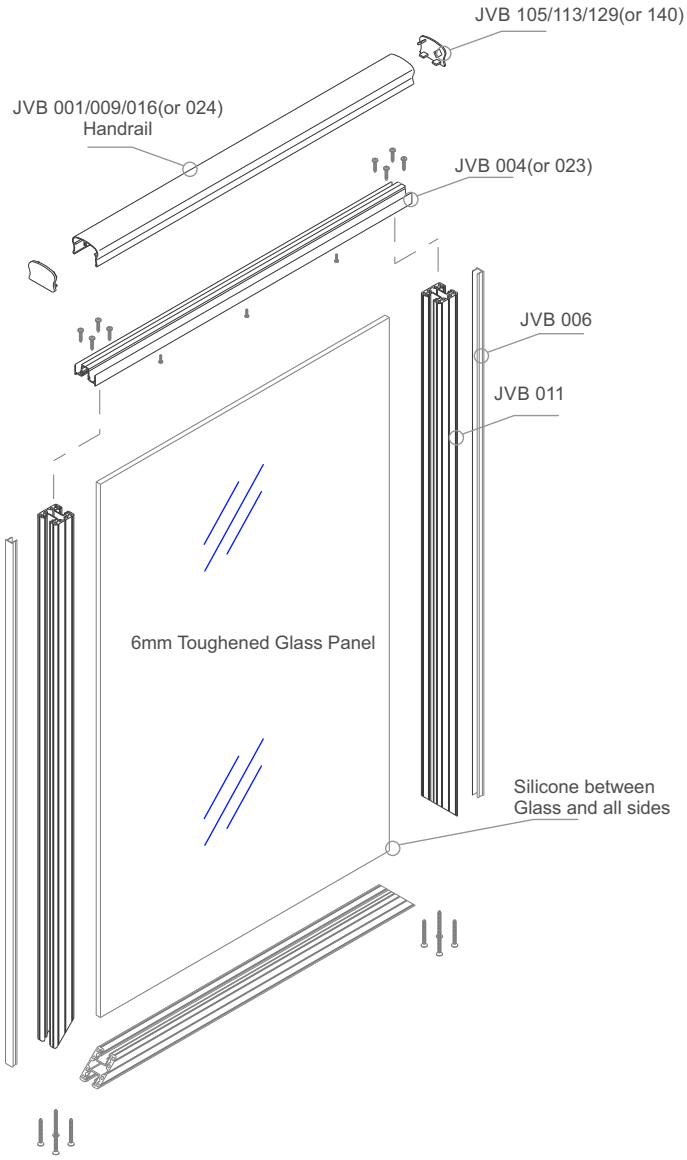

Typical Gate Assembly - Baluster

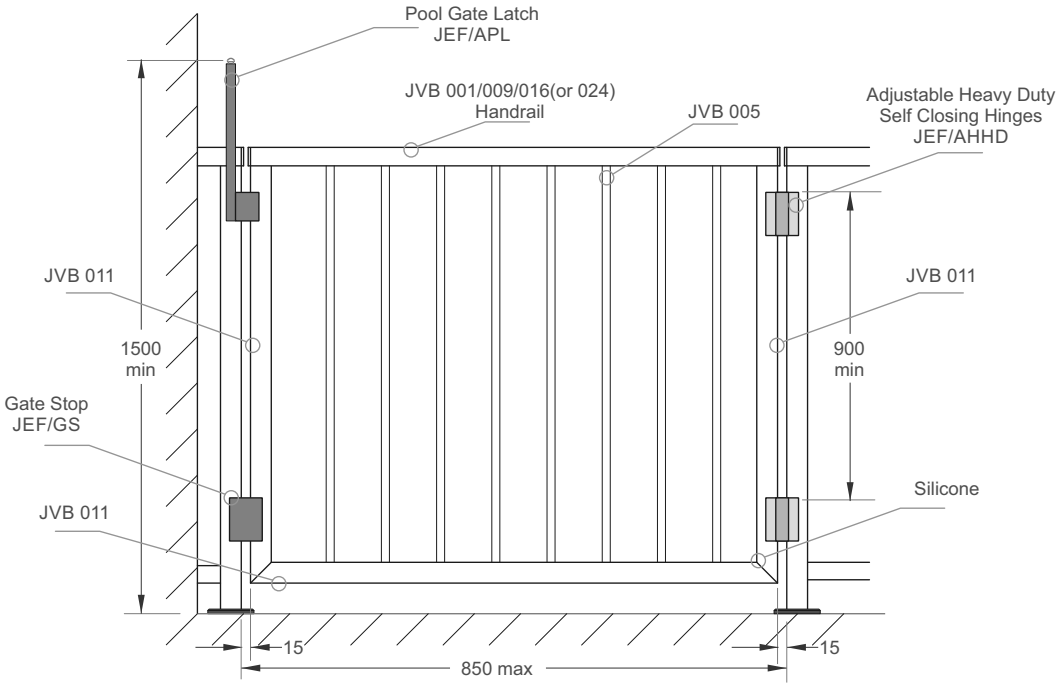

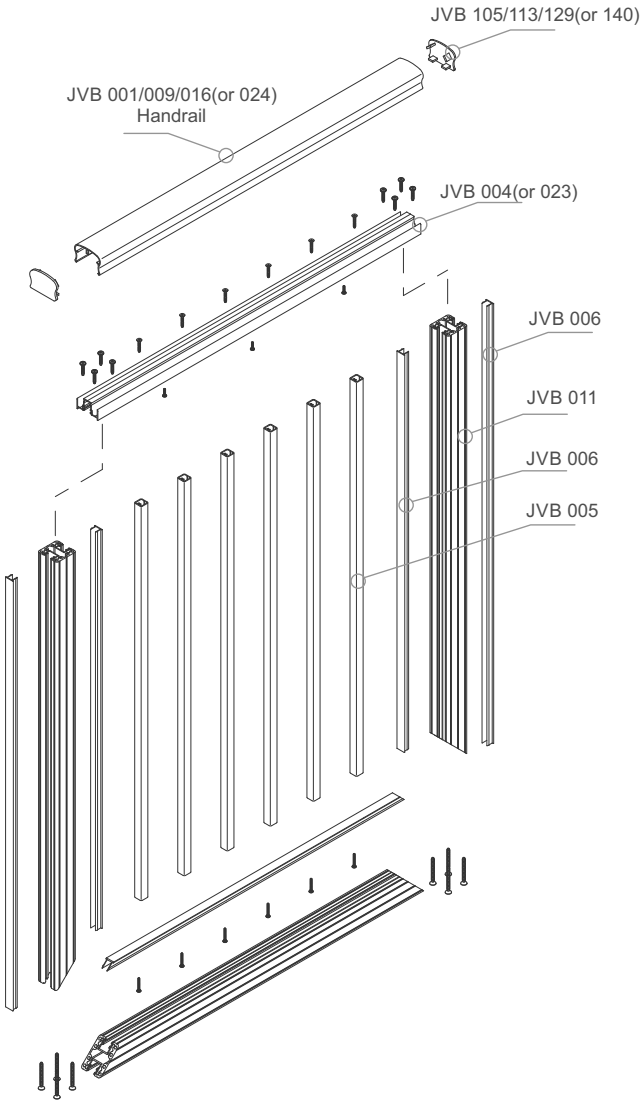

Interlinking Rail conforming to NZS 4223.3.2016 and Building Code Clause B1.3.4

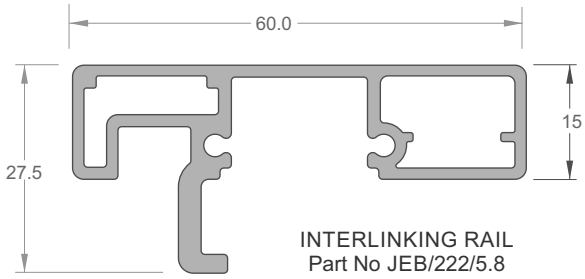

INTERLINKING RAIL
Part No JEB/222/5.8

Interlinking Rail End Cap
Part No JEC 18
Can be used as RH or LH

10mm Toughened Glass - Semi Frameless. Interlinking Rail + JEC29 Brackets Deckside.

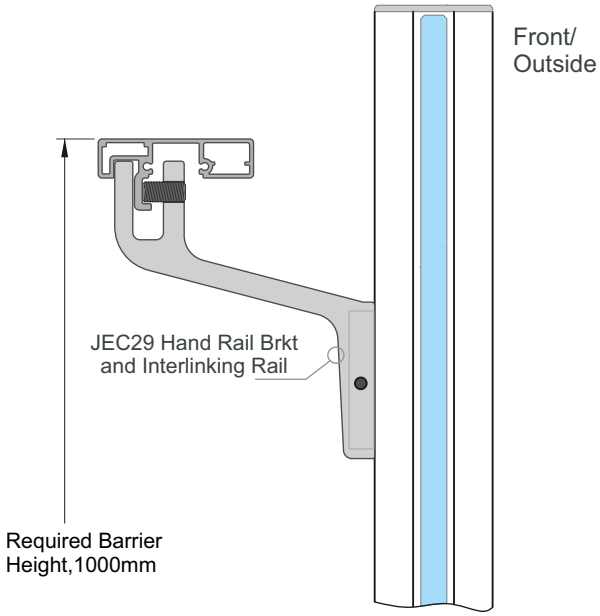

Interlinking Rail
End Cap, Straight
135 deg and 90deg corners

All ex 3mm Aluminium Plate

Interlinking Rail End Cap
Can be used as RH or LH

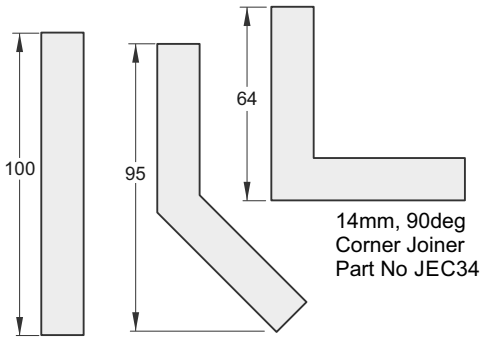

14mm, 90deg
Corner Joiner
Part No JEC34

14mm
Straight Joiner
Part No JEC32

14mm, 135deg
Corner Joiner
Part No JEC36

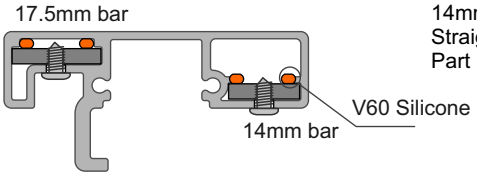

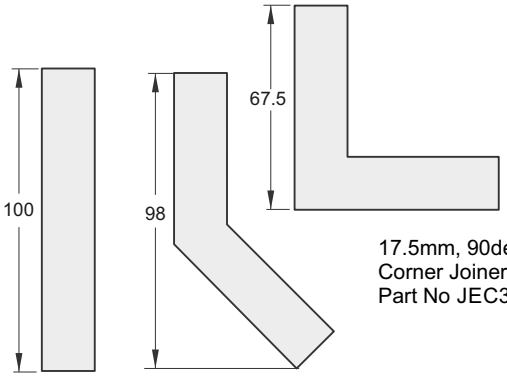

17.5mm, 90deg
Corner Joiner
Part No JEC35

17.5mm
Straight Joiner
Part No JEC33

17.5mm, 135deg
Corner Joiner
Part No JEC37

Joiners:
- With Joiner in place, spot drill from below for position
- Drill out joiner to 3mm dia, extrusion to 4mm dia
- Use No 6 x 1/4in SS ST Pan sq drive screw
- Insert dobs of V60 Silicone inside cavities before inserting
- Both ends to be attached.
- Joins must be within 300mm of Post
- Minimum distance between screw and end of handrail is 10mm

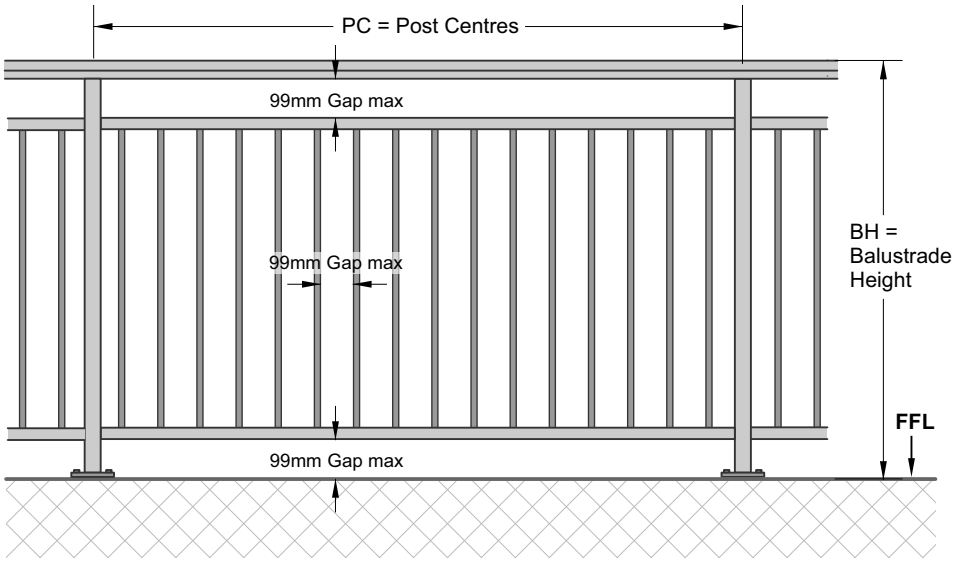

BALUSTRADE DESIGN GUIDE - for building types below. All other applications please contact Juralco

	BUILDING TYPE	LOCATION	HEIGHT (mm)
BH = HEIGHT OF BALUSTRADE (Measured from FFL to top of Barrier)	Detached dwellings and within household units of multi-unit dwellings	Stairs and ramps and their landings	900
		Balconies and decks, and edges of internal floors or mezzanine floors	1000
	All other buildings, and common areas of multi-unit dwellings	Stairs or ramps (excluding landings)	900
		Barriers within 530mm of the front of fixed seating	800
		All other locations	1100
	Note: A Building Consent is required when installing or replacing a Swimming Pool Fence. Refer to NZBC Clause F9	Swimming Pools	1200

GAPS (max) as above		99

PC = POST CENTRES (max)	17mm Balusters	1400
	6mm Toughened glass infill panels	1400
	10mm Toughened glass for up to & including 1200mm High and High wind zone	1400

NZBC REQUIREMENTS - SECTION F4 : SAFETY FROM FALLING

NOTES:
1 - Heights are measured vertically from finished floor level (ignoring carpet or vinyl, or similar thickness coverings) on floors, landings and ramps. On stairs the height is measured vertically from the pitch line or stair nosings.
2 - A landing is a platform with the sole function of providing access.
3 - Household unit does not include a hostel, boarding house, motel or other specialized accommodation.
4 - Stairs or ramps for all other buildings does not include landings - use all other locations
5 - The triangular opening formed by the riser, tread, and bottom rail of the barrier on a stair shall be of such a size that a 150mm diameter sphere can not pass though it, except for swimming pool stairs where the diameter is 100mm.
6 - Barriers to swimming pools shall have in addition to performance F9 and NZS8500
a) All gates and doors fitted with latching devices not readily operated by children, and constructed to automatically close and latch when released from any stationary position 150mm or more from the closed and secured position but excluding sliding and sliding-folding doors that give access tothe immediate pool surround from a building that forms part of the barrier and,
b) No permanent objects on the outside or inside of the barrier that could provide a climbing step
7 - No toeholds between the heights of 150mm and 760mm above floor level (or stair nosing). .

Juralco Viking Balustrade System building code compliance documentation requires all balustrade installations are to be completed in accordance with the requirements of our authorised installer certification.

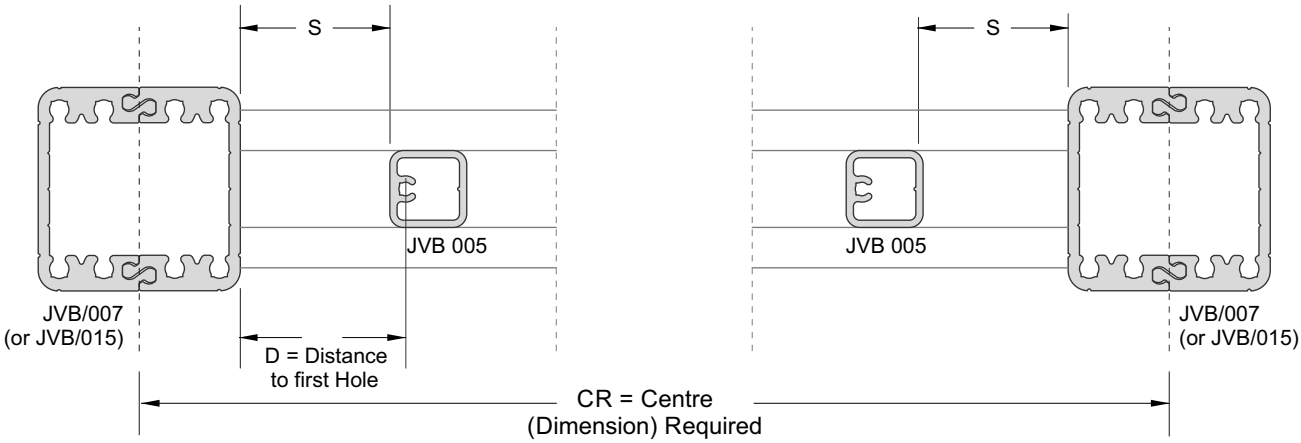

CM= Centre, Maximum (of Posts)	Max CRS for No of Balusters	No of Balusters
	260	1
	376	2
	492	3
	608	4
	724	5
	840	6
	956	7
	1072	8
	1188	9
	1304	10
	1420	11

To achieve an equal distance 'S' from either end of panel use equation shown below.
= 103 - (CM - CR)/2

Example:
The distance required (CR) is 890mm centres,
Use CM = 956 as next value up.

Substitute into equation shown above
= 103 - [(956-890)/2]
= 103-33
= 70

Therefore make first cut 70mm from first hole (as shown at the LH End)
Note: Balusters JVB005 must be positioned as shown.

Two Post 90 Deg Corner

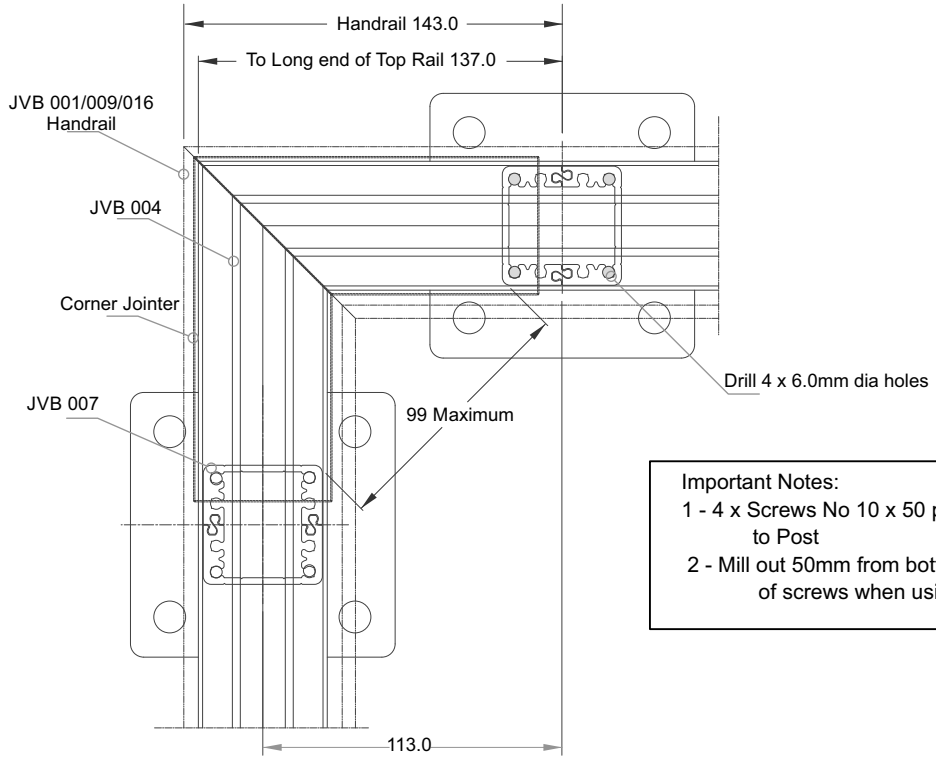

Important Notes:
1 - 4 x Screws No 10 x 50 pan required to fix Base Plate to Post
2 - Mill out 50mm from bottom of Post to allow fitment of screws when using Base Plate

Single Post 90 Deg Corner

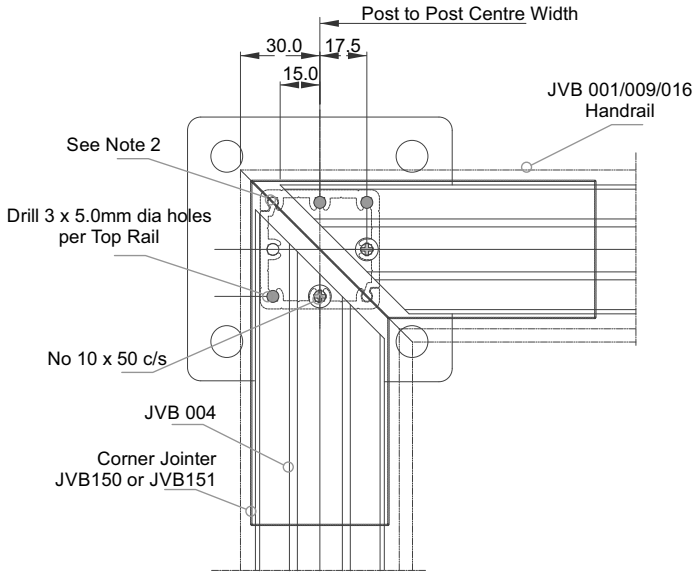

Important Notes:
1 - 4 x Screws No 10 x 50 pan required to fix Base Plate to Post
2 - Mill out 50mm from bottom of Post to allow fitment of screws when using Base Plate

Angled Corner

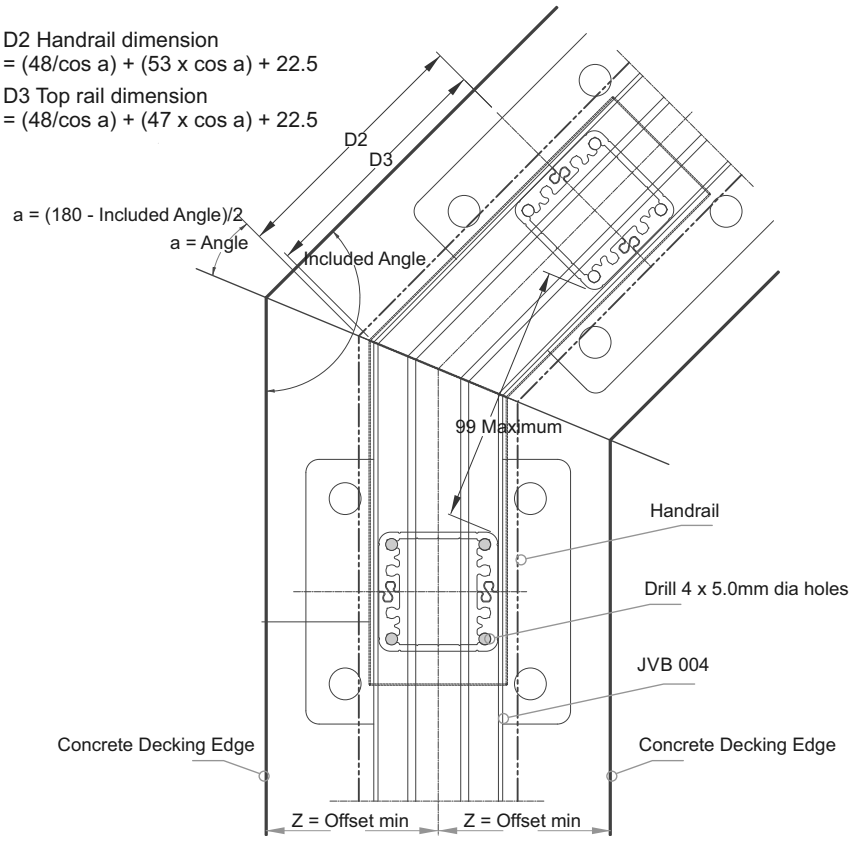

Minimum Edge distance when fixing to Concrete and anchor types.
JVB 101 Baseplate , Z = 50mm, 2 x M12 x 80mm deep Epcon or Chemset anchors
JVB 100 Baseplate , Z = 70mm, 4 x M10 x 90mm deep Epcon or Chemset anchors
These fastenings are based on a minimum concrete strength of 17.5 MPa

Corner Jointers to be Cut/Welded by installer

Typical Assembly - Top Handrail

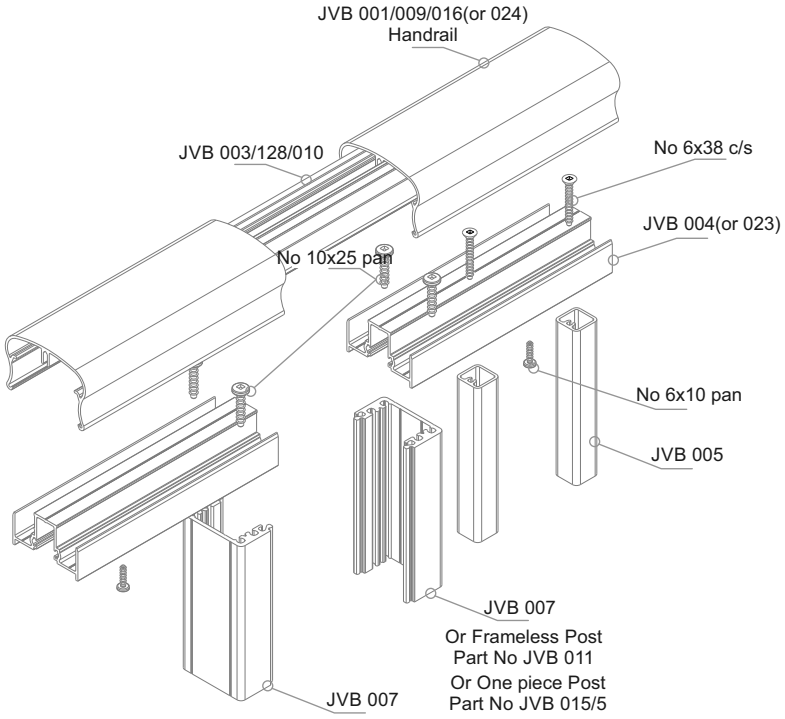

Typical Assembly - Lower Panel

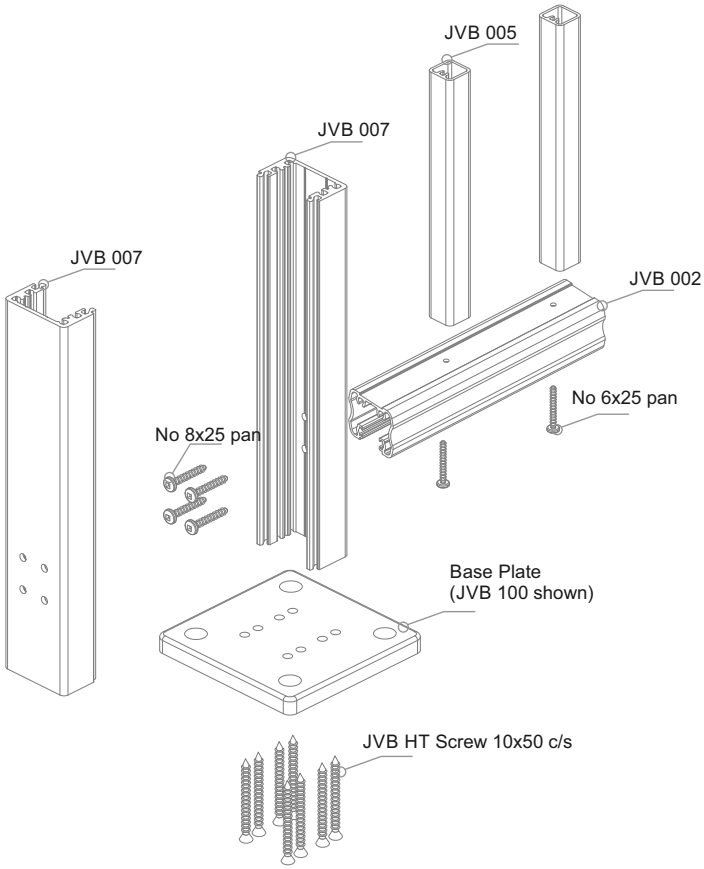

Typical Assembly - Semi Frameless Glass and Handrail

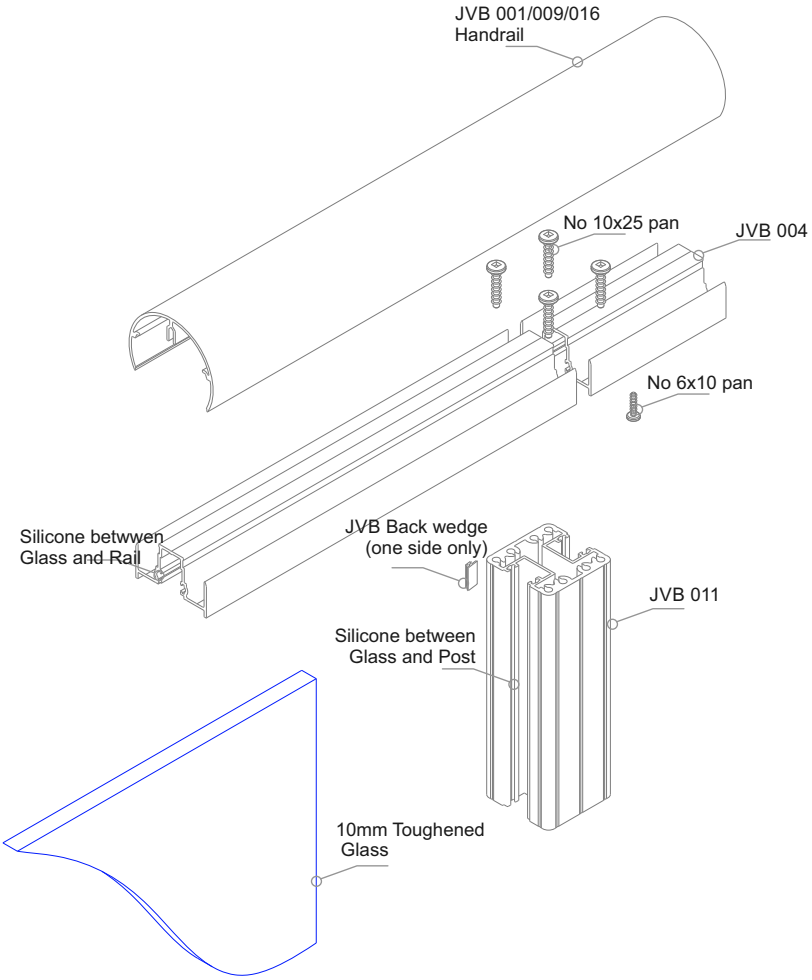

Typical Assembly - Corner

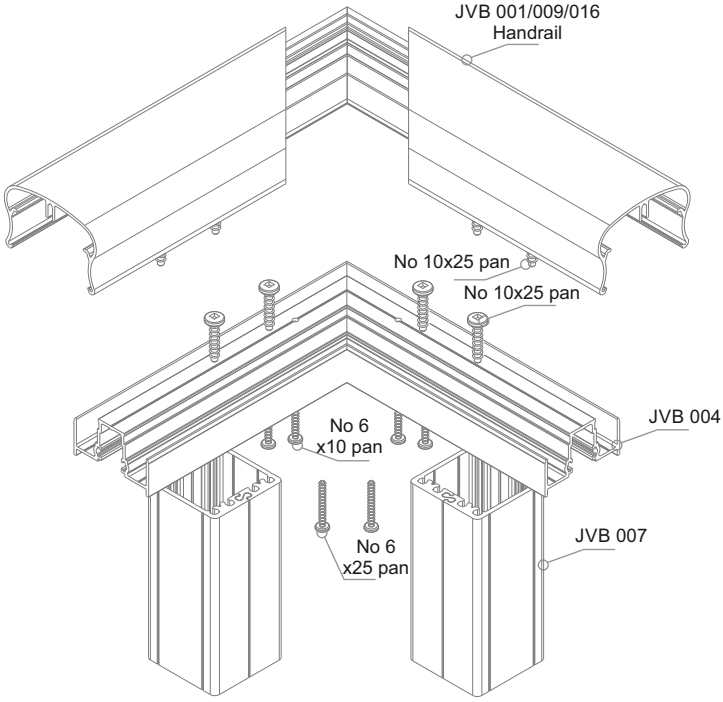

Typical Assembly - Nib Wall, Handrail

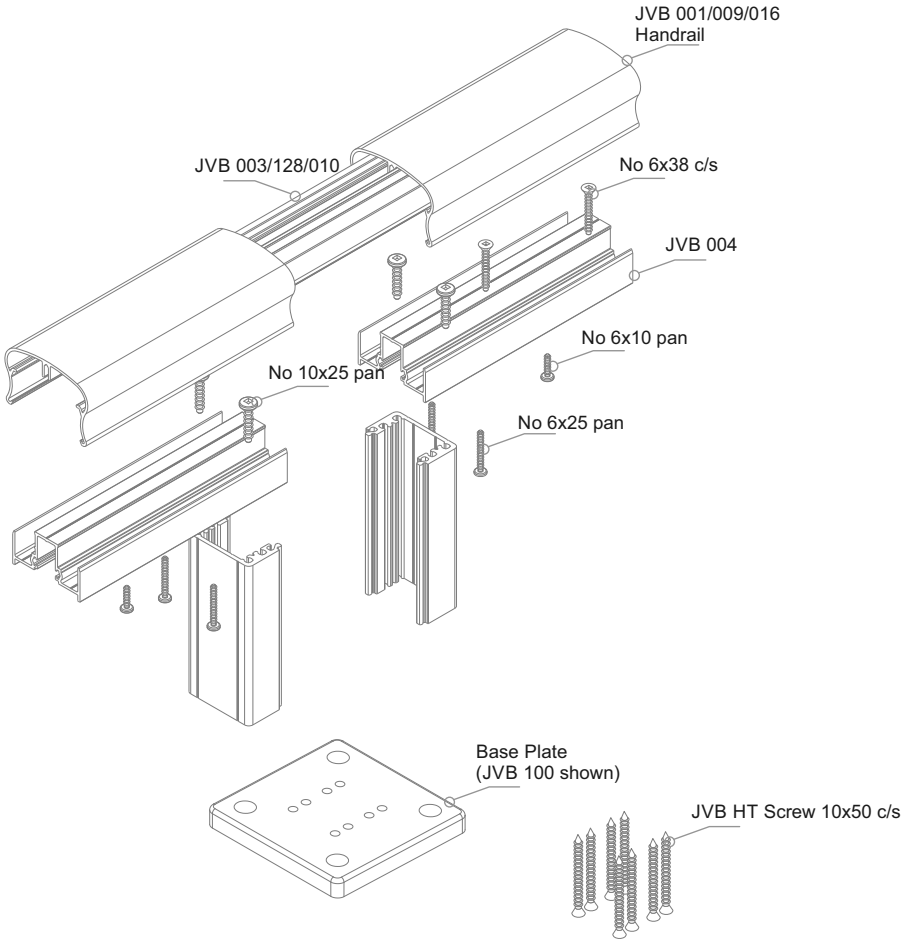

Typical Assembly - Rail Brackets

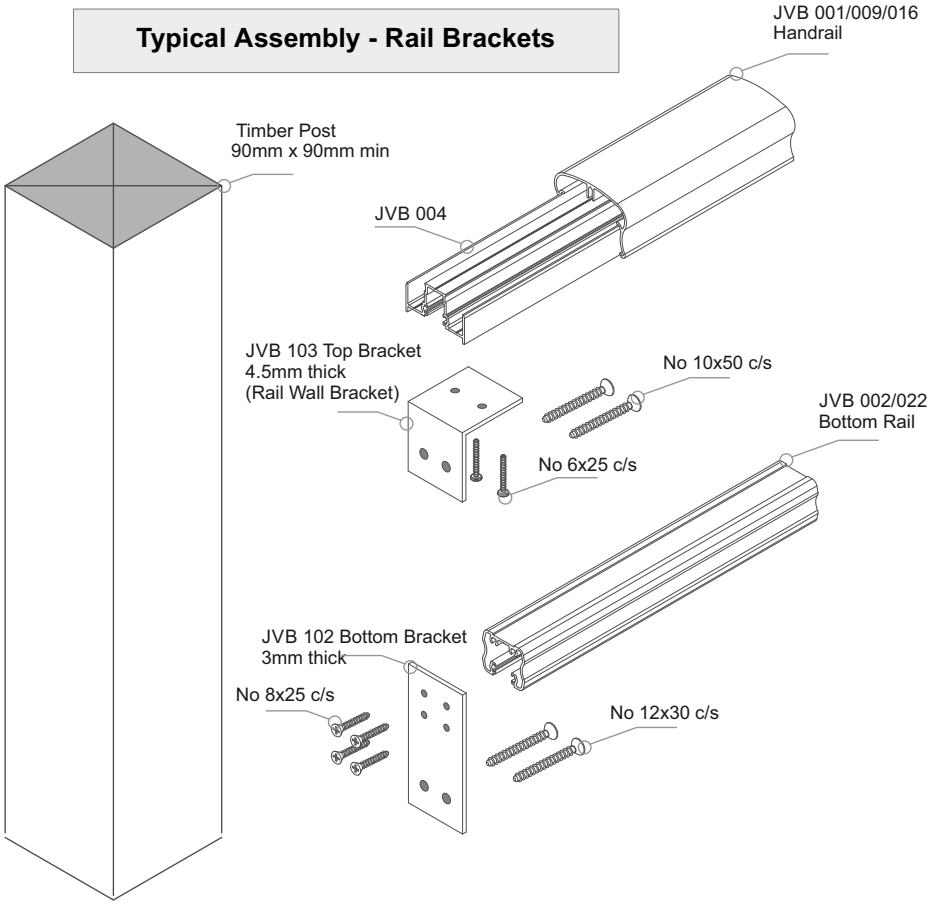

Typical Assembly - Wall Mounted Handrail

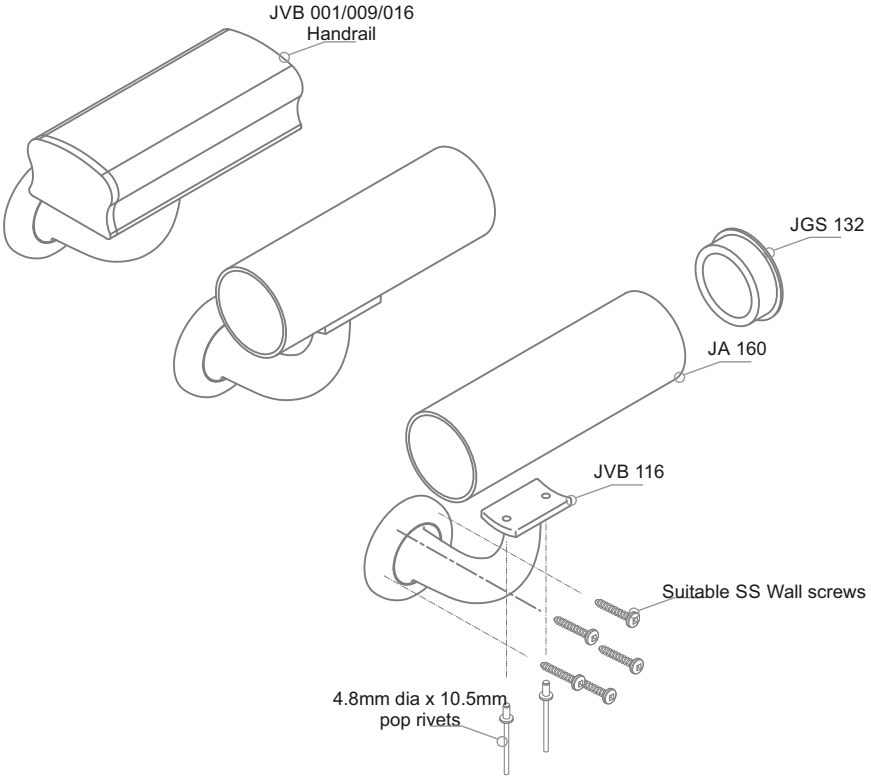

Post Mounting Options

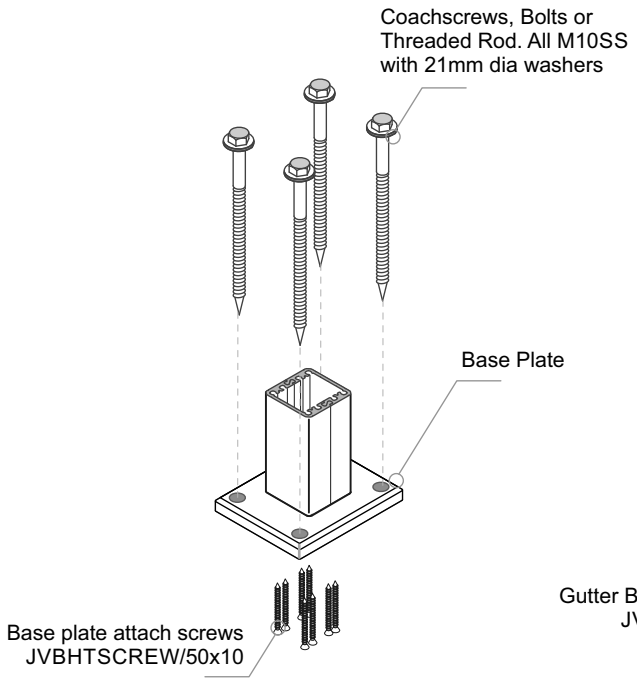

Top Fix
Base Plates in a variety of sizes.
Different fasteners types depending
on the Building substrate.
Includes a 90deg Semi Frameless Corner Post

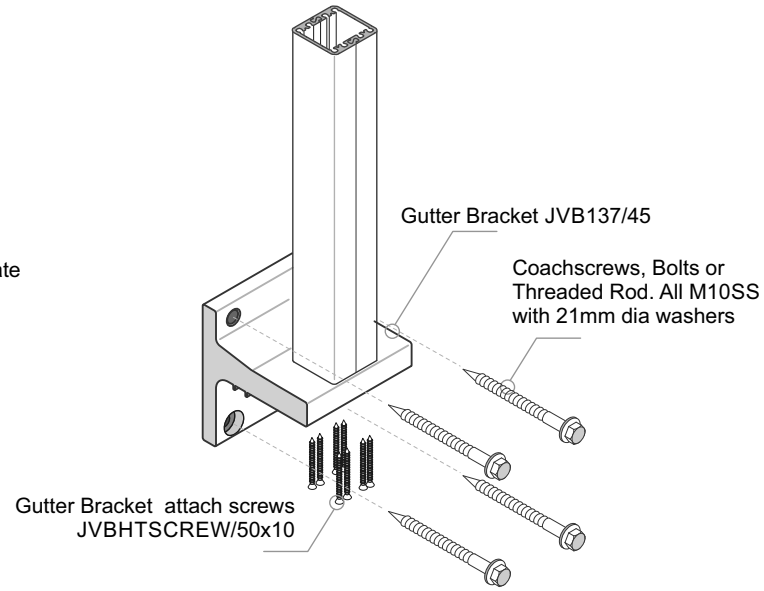

Gutter Bracket Face Fix
Different fasteners types depending
on the Building substrate.

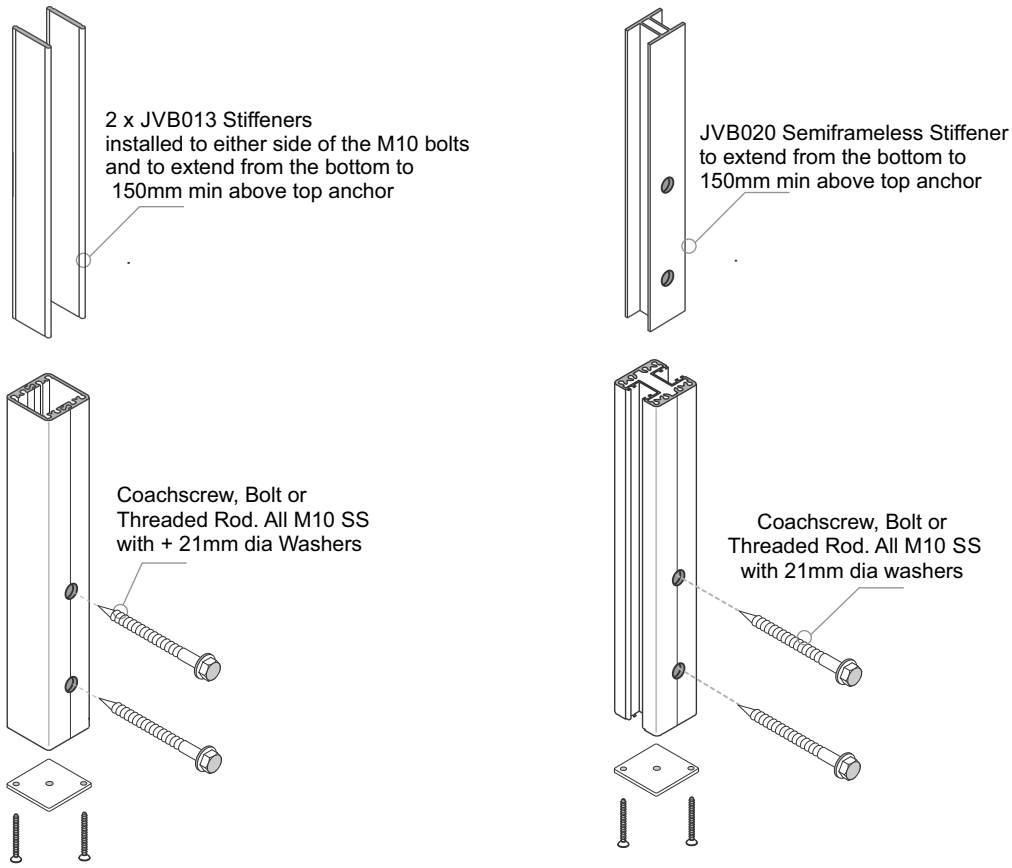

Face Fix
Different fasteners types depending
on the Building substrate.

Typical TOP Fix to Timber - JVB121, 110mm x 90mm, 4 hole Base Plate - M10 SS Coachscrews

Balustrade Dimensions by Wind Zone

Up to and including Very High Wind Zone						
Balustrade Height, mm						
1000	**1050**	**1100**	**1150**	**1200**	**1250**	**1300 max**
1400	1350	1300	1250	1200	1150	1100
Post Spacing max, mm						

Extra High Wind Zone
17mm Balusters only
Balustrade Height, mm
1275 max
1400
Post Spacing max, mm

General Notes:
1 - All measurements mm
2 - Occupancy only A, A other and C3.
3 - Balustrade Height measured above Deck/FFL.
4 - Wind Zones as per NZS 3604:2011

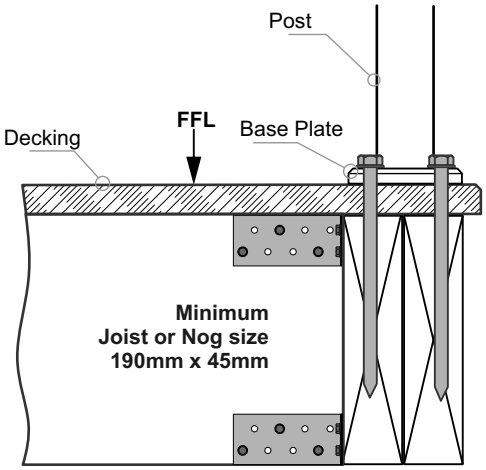

Important Installation notes:
1 - The Project Engineer must ensure the structure can support the appropriate loads
2 - Substructure shown indicatively only. Timber SG8 minimum strength
3 - Coachscrews 130mm min engagement into joists, predrill 6mm holes.
4 - Bond all coachscrews with SIKA Supergrip to full depth
5 - All Fixings must be Stainless steel

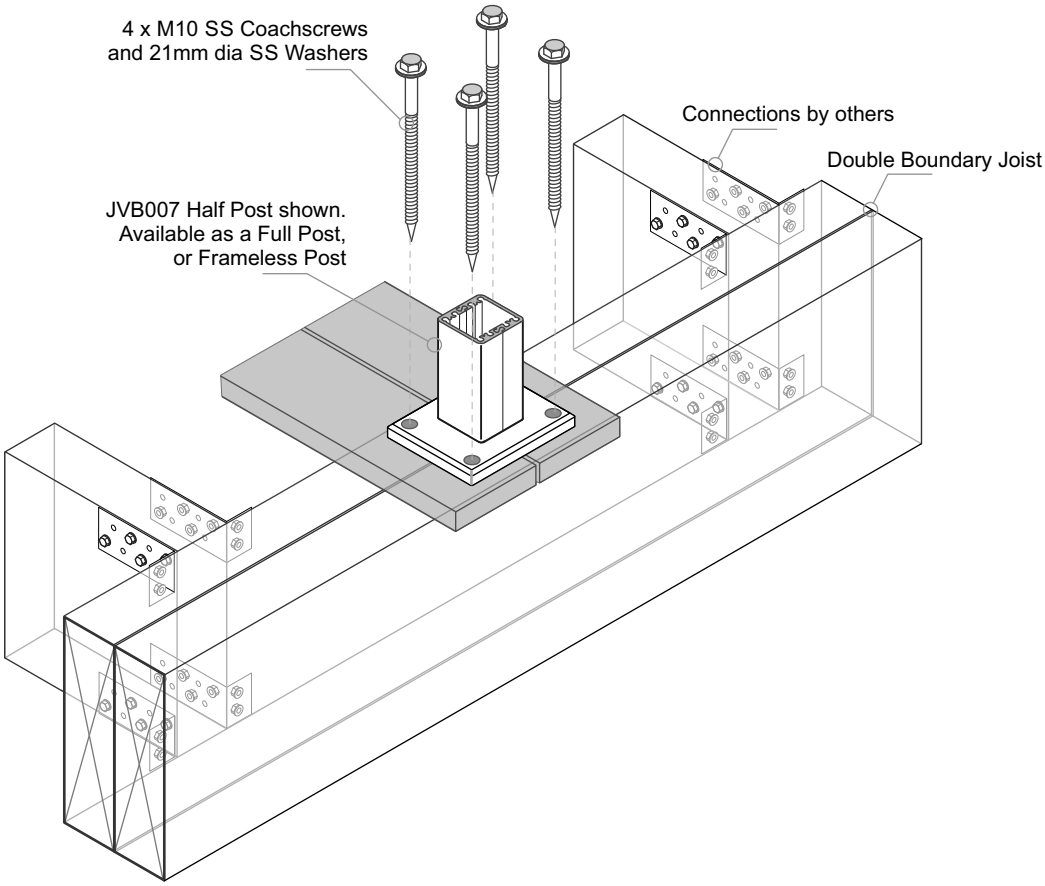

Typical FACE Fix Post to Timber - M10 SS Coachscrews

Balustrade Dimensions by Wind Zone

Up to and including Very High Wind Zone

Balustrade Height, mm						
1000	**1050**	**1100**	**1150**	**1200**	**1250**	**1300 max**
1400	1350	1300	1250	1200	1150	1100
Post Spacing max, mm						

Extra High Wind Zone

All Balustrades
Coachscrews as shown NOT SUITABLE. Must use Bolts

General Notes:
1 - All measurements mm
2 - Occupancy only A, A other and C3.
3 - Balustrade Height measured above Deck/FFL.
4 - Wind Zones as per NZS 3604:2011

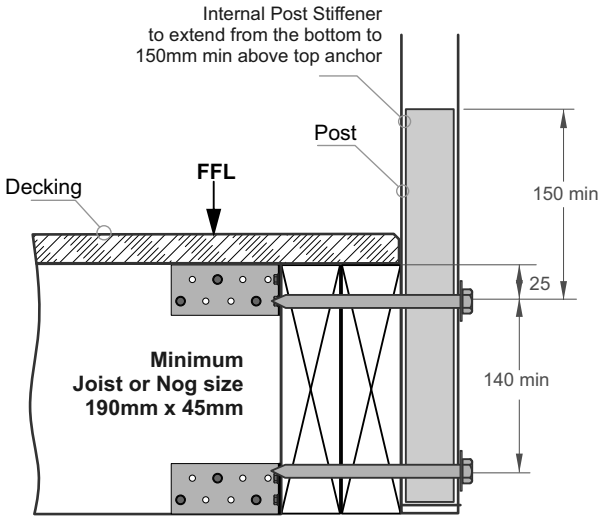

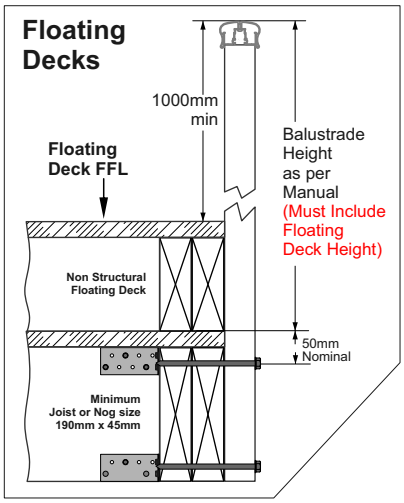

Important Installation notes:
1 - The Project Engineer must ensure the structure can support the appropriate loads
2 - Substructure shown indicatively only. Timber SG8 minimum strength
3 - Coachscrews 90mm min engagement into joists, predrill 6mm holes.
4 - Bond all coachscrews with SIKA Supergrip to full depth
5 - All Fixings must be Stainless steel

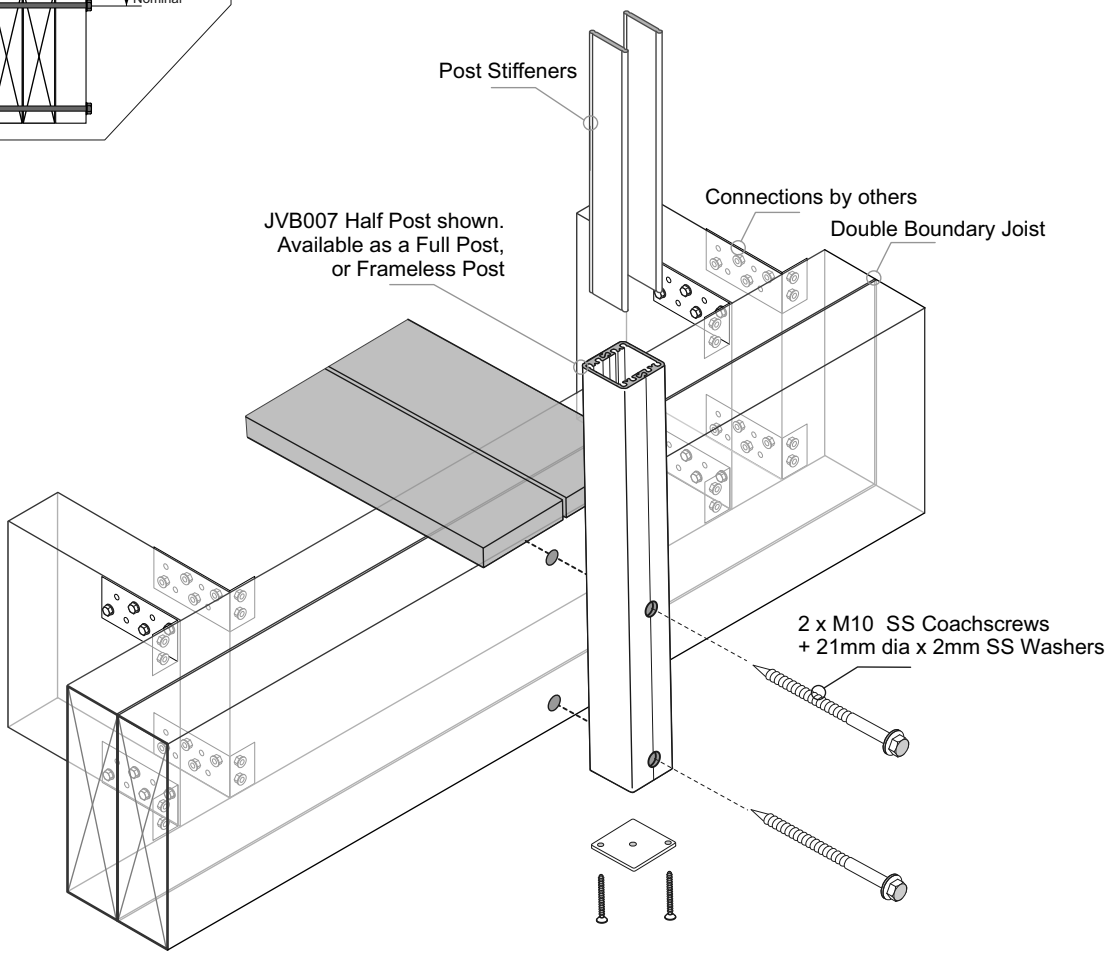

Typical FACE Fix Post to Timber - M10 SS Bolts or Threaded Rod

Balustrade Dimensions by Wind Zone

Up to and including Very High Wind Zone

Balustrade Height, mm						
1000	**1050**	**1100**	**1150**	**1200**	**1250**	**1300 max**
1400	1350	1300	1250	1200	1150	1100
Post Spacing max, mm						

Extra High Wind Zone

17mm Balusters only
Balustrade Height, mm
1275 max
1400
Post Spacing max, mm

General Notes:
1 - All measurements mm
2 - Occupancy only A, A other and C3.
3 - Balustrade Height measured above Deck/FFL.
4 - Wind Zones as per NZS 3604:2011

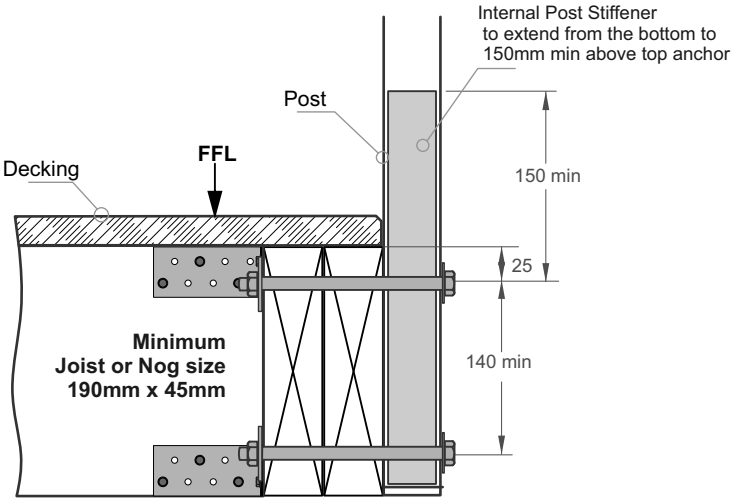

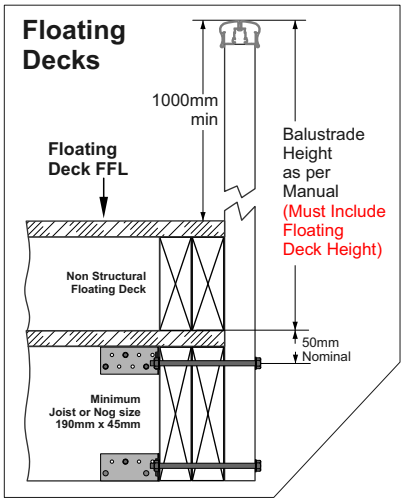

Important Installation notes:
1 - The Project Engineer must ensure the structure can support the appropriate loads
2 - Substructure shown indicatively only. Timber SG8 minimum strength
3 - All Fixings must be Stainless steel

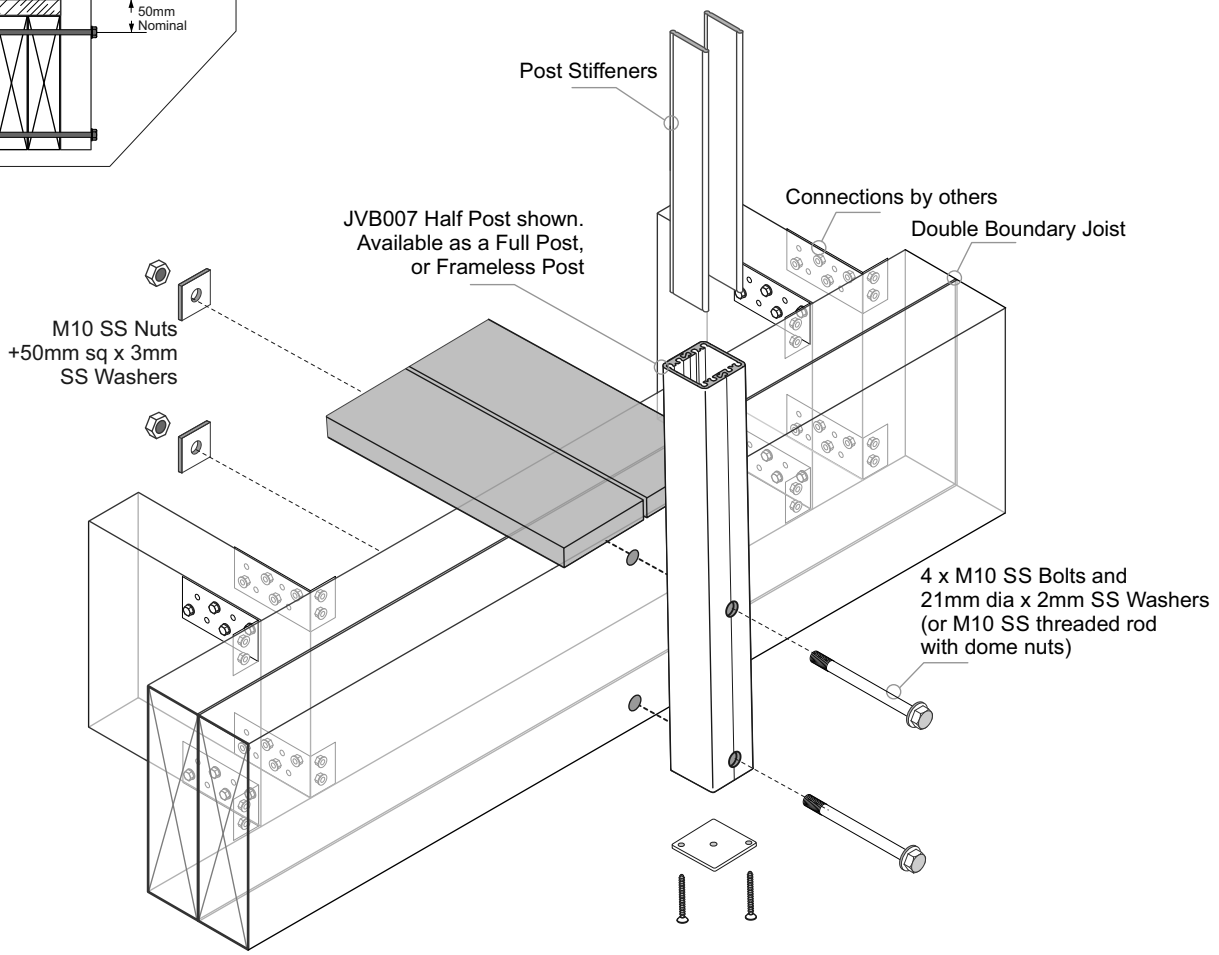

Typical FACE Fix to Timber - JVB137/45, Gutter Bracket - M10 SS Coachscrews

Balustrade Dimensions by Wind Zone

Up to and including Very High Wind Zone						
Balustrade Height, mm						
1000	**1050**	**1100**	**1150**	**1200**	**1250**	**1300 max**
1400	1350	1300	1250	1200	1150	1100
Post Spacing max, mm						

Extra High Wind Zone
17mm Balusters only
Balustrade Height, mm
1275 max
1400
Post Spacing max, mm

General Notes:
1 - All measurements mm
2 - Occupancy only A, A other and C3.
3 - Balustrade Height measured above Deck/FFL.
4 - Wind Zones as per NZS 3604:2011

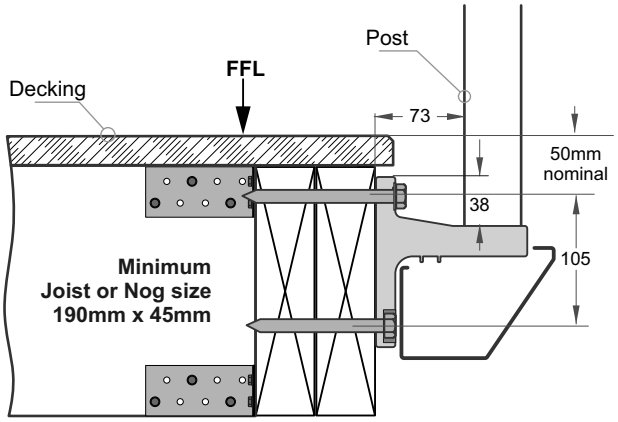

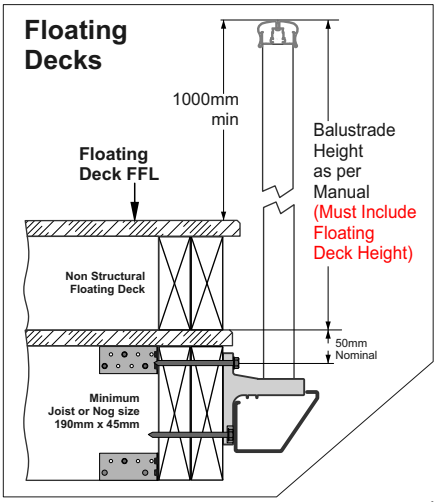

Important Installation notes:
1 - The Project Engineer must ensure the structure can support the appropriate loads
2 - Substructure shown indicatively only. Timber SG8 minimum strength
3 - Coachscrews 90mm min engagement into joists, predrill 6mm holes.
4 - Bond all coachscrews with SIKA Supergrip to full depth
5 - All Fixings must be Stainless steel

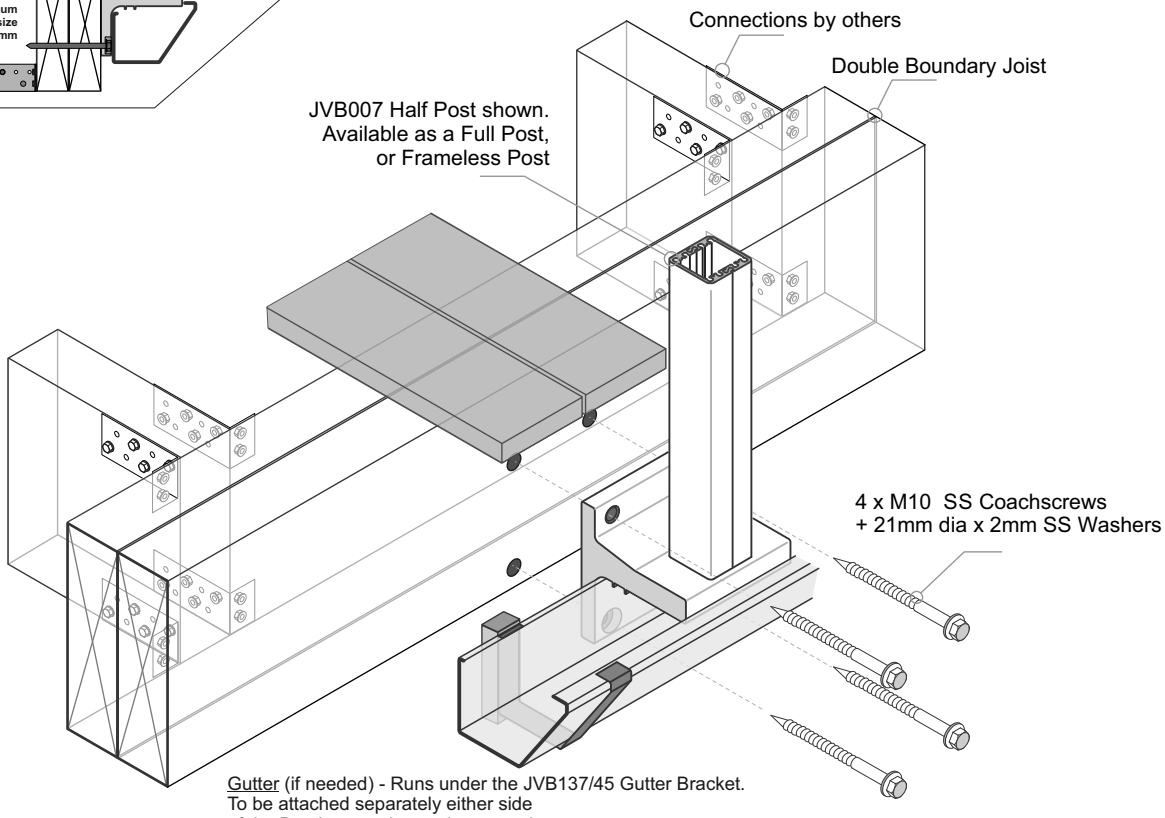

Gutter (if needed) - Runs under the JVB137/45 Gutter Bracket.
To be attached separately either side
of the Bracket to suit propriety guttering system.
Pack out to clear.

Typical FACE Fix to Timber - JVB137/45, Gutter Bracket - M10 SS Bolts

Balustrade Dimensions by Wind Zone

Up to and including Very High Wind Zone						
Balustrade Height, mm						
1000	**1050**	**1100**	**1150**	**1200**	**1250**	**1300 max**
1400	1350	1300	1250	1200	1150	1100
Post Spacing max, mm						

Extra High Wind Zone
17mm Balusters only
Balustrade Height, mm
1275 max
1400
Post Spacing max, mm

General Notes:
1 - All measurements mm
2 - Occupancy only A, A other and C3.
3 - Balustrade Height measured above Deck/FFL.
4 - Wind Zones as per NZS 3604:2011

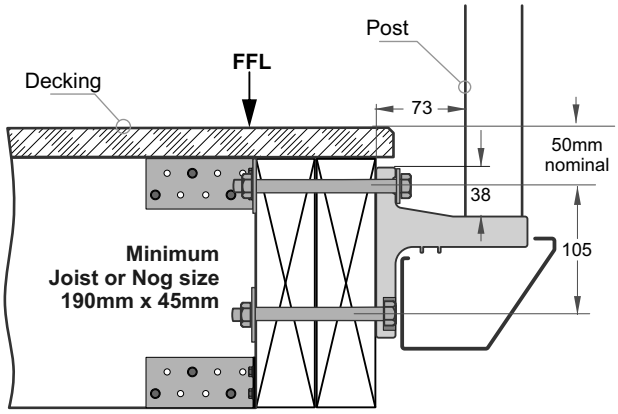

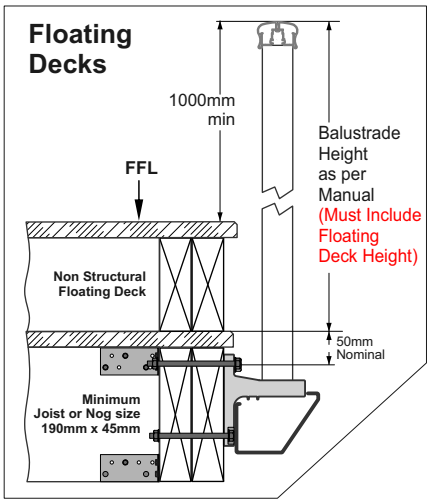

Important Installation notes:
1 - The Project Engineer must ensure the structure can support the appropriate loads
2 - Substructure shown indicatively only. Timber SG8 minimum strength
3 - All Fixings must be Stainless steel

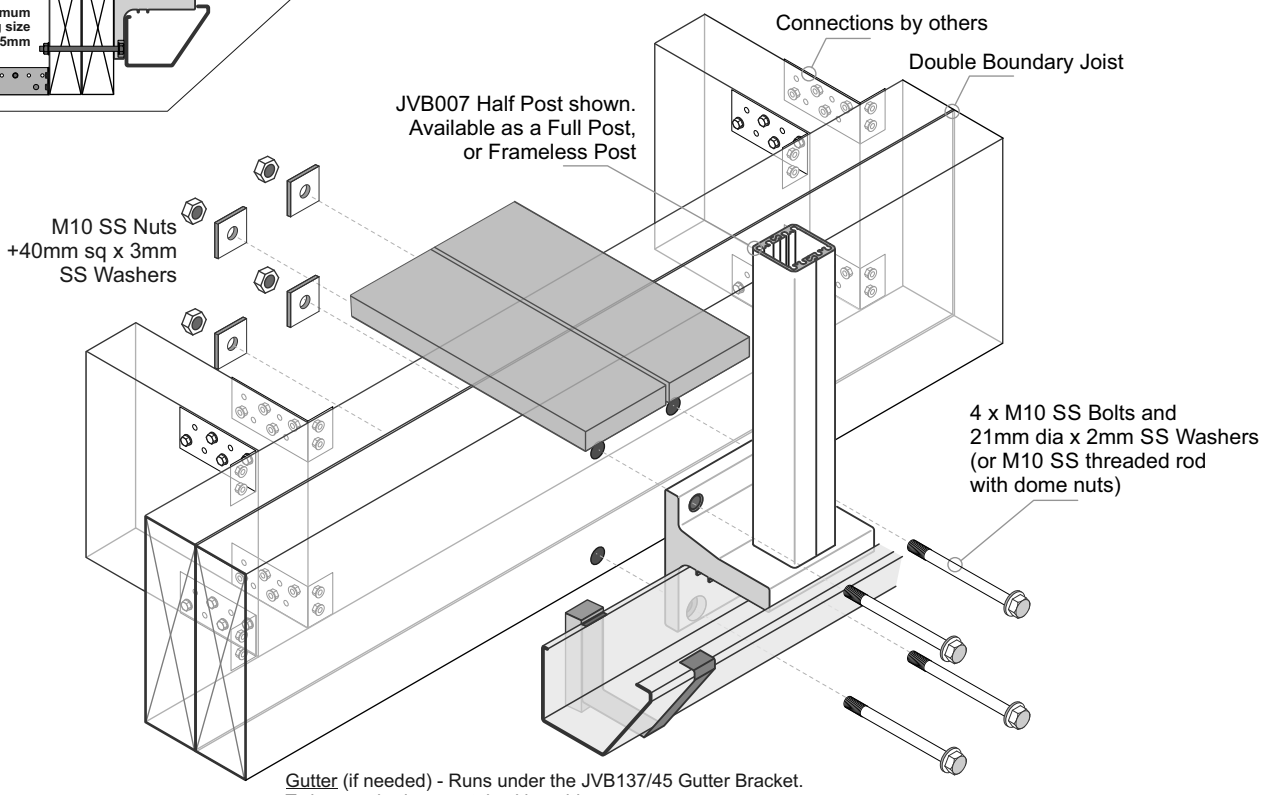

Gutter (if needed) - Runs under the JVB137/45 Gutter Bracket.
To be attached separately either side
of the Bracket to suit propriety guttering system.
Pack out to clear.

Typical TOP Fix to Steel with Timber Deck - JVB121, 110mm x 90mm, 4 hole Base Plate - M10 SS Bolts

Balustrade Dimensions by Wind Zone

Up to and including Very High Wind Zone						
Balustrade Height, mm						
1000	**1050**	**1100**	**1150**	**1200**	**1250**	**1300 max**
1400	1350	1300	1250	1200	1150	1100
Post Spacing max, mm						

Extra High Wind Zone
17mm Balusters only
Balustrade Height, mm
1275 max
1400
Post Spacing max, mm

General Notes:
1 - All measurements mm
2 - Occupancy only A, A other and C3.
3 - Balustrade Height measured above Deck/FFL.
4 - Wind Zones as per NZS 3604:2011

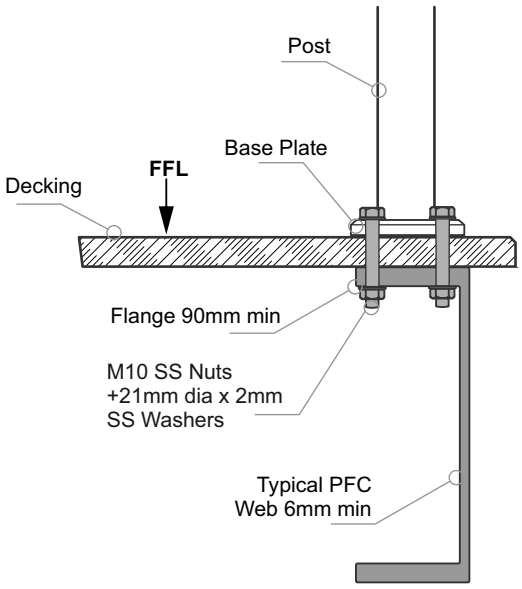

Important Installation notes:
1 - The Project Engineer must ensure the structure can support the appropriate loads
2 - Substructure shown indicatively only
3 - All fixings must be Stainless steel

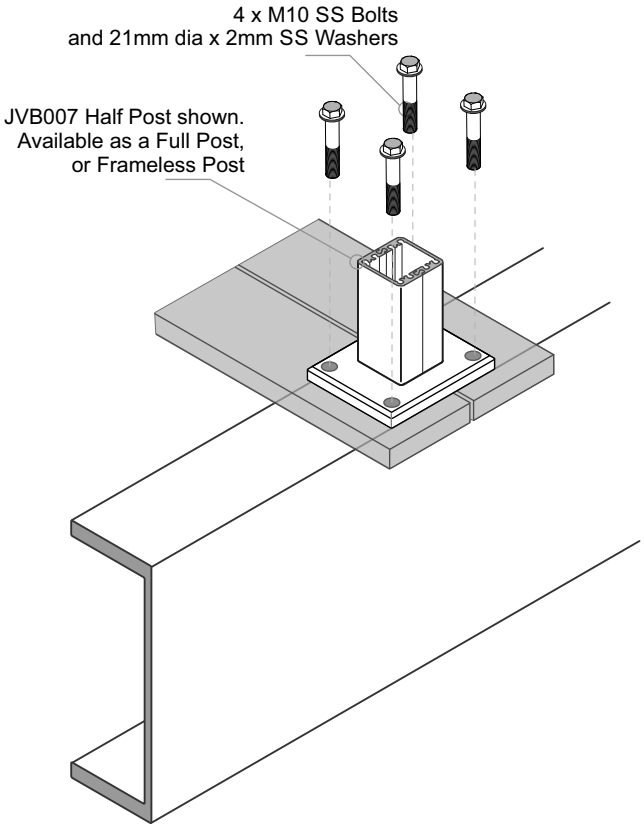

Typical TOP Fix to Timber Deck + Steel - JVB101, 110mm x 90mm, 2 hole Base Plate - M10 SS Bolts

Balustrade Dimensions by Wind Zone

Up to and including Very High Wind Zone

Balustrade Height, mm						
1000	**1050**	**1100**	**1150**	**1200**	**1250**	**1300 max**
1400	1350	1300	1250	1200	1150	1100
Post Spacing max, mm						

Extra High Wind Zone

NOT SUITABLE.

General Notes:
1 - All measurements mm
2 - Occupancy only A, A other and C3.
3 - Balustrade Height measured above Deck/FFL.
4 - Wind Zones as per NZS 3604:2011

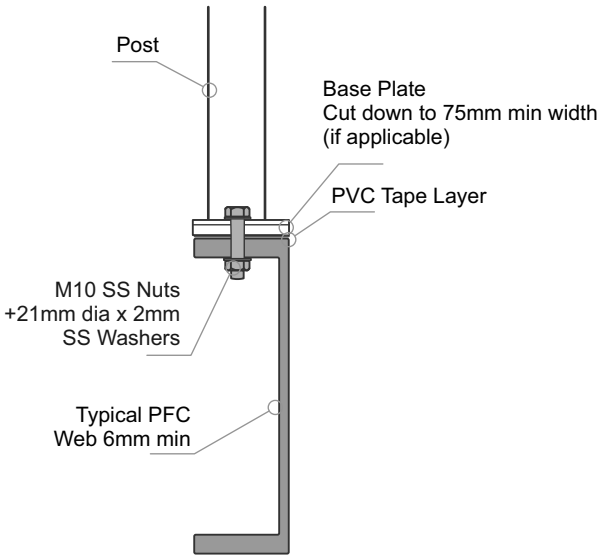

Important Installation notes:
1 - The Project Engineer must ensure the structure can support the appropriate loads
2 - Substructure shown indicatively only
3 - The Baseplate can be cut down to 75mm wide
4 - Both Base plate and PFC must be aligned, with Bolt at C/L
5 - A PVC tape layer must be placed between Baseplate and Steel
6 - All fixings must be Stainless steel

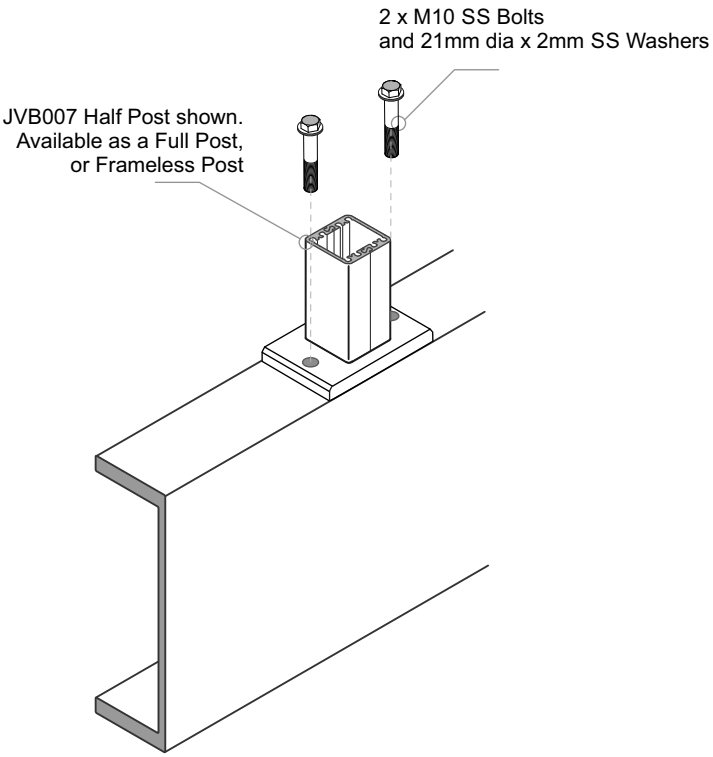

Typical FACE Fix Post to Steel - M10 SS Bolts

Balustrade Dimensions by Wind Zone

Up to and including Very High Wind Zone

Balustrade Height, mm						
1000	**1050**	**1100**	**1150**	**1200**	**1250**	**1300 max**
1400	1350	1300	1250	1200	1150	1100
Post Spacing max, mm						

Extra High Wind Zone

17mm Balusters only
Balustrade Height, mm
1275 max
1400
Post Spacing max, mm

General Notes:
1 - All measurements mm
2 - Occupancy only A, A other and C3.
3 - Balustrade Height measured above Deck/FFL.
4 - Wind Zones as per NZS 3604:2011

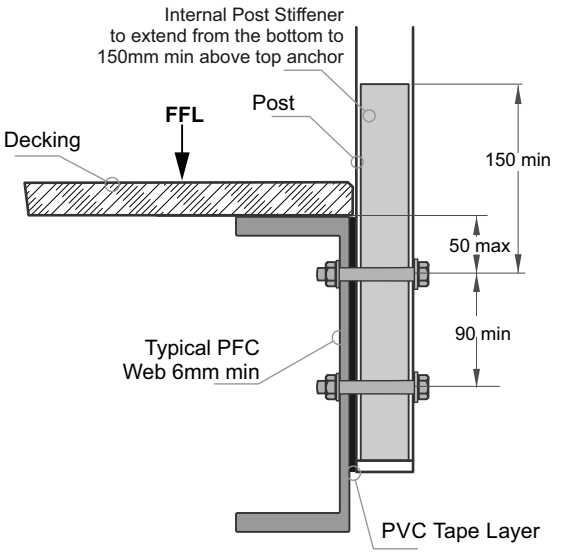

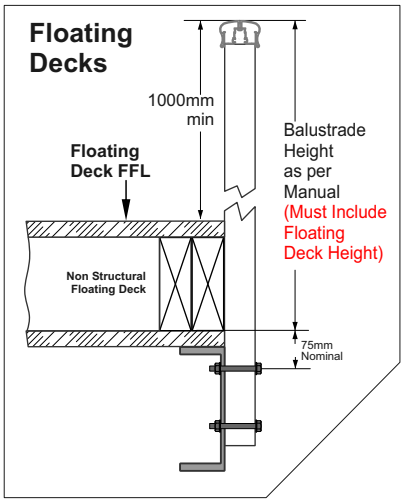

Important Installation notes:
1 - The Project Engineer must ensure the structure can support the appropriate loads
2 - Substructure shown indicatively only
3 - A PVC tape layer must be placed between Post and Steel
4 - All fixings must be Stainless steel

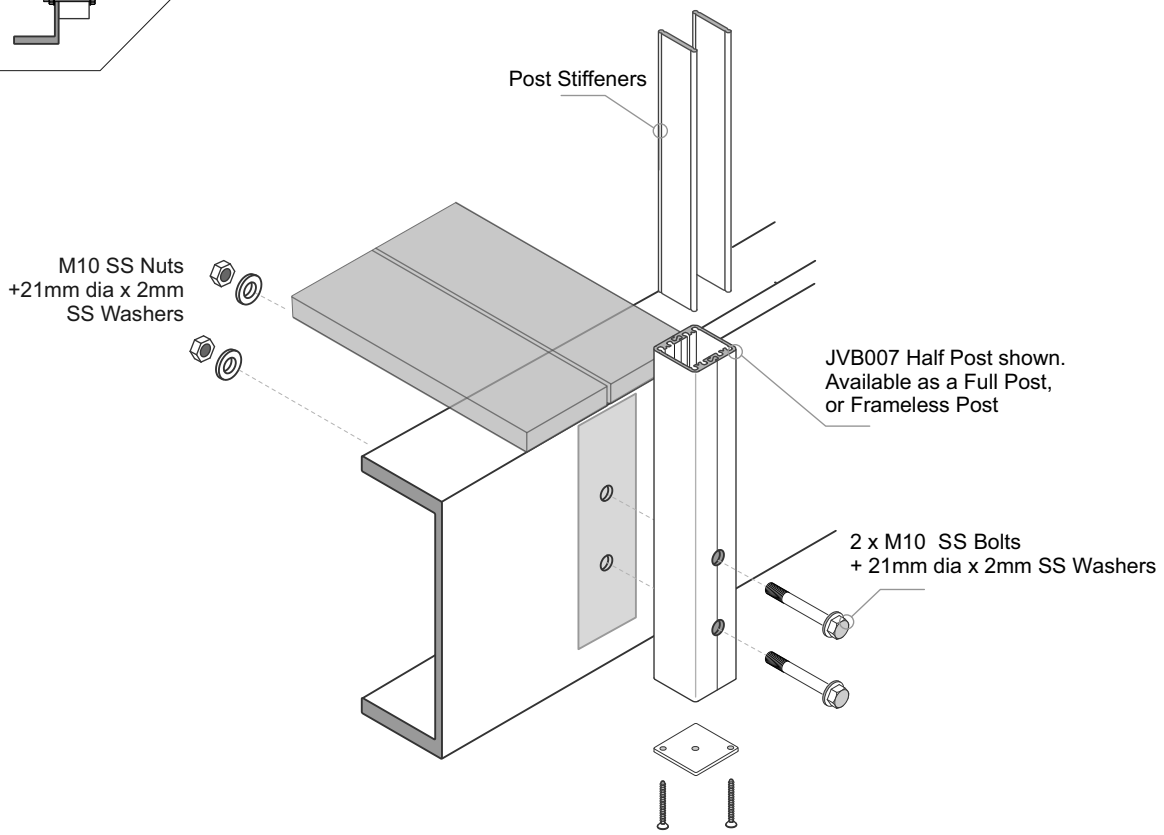

Typical FACE Fix Post to Steel + Wooden Packers - M10 SS Bolts

Balustrade Dimensions by Wind Zone

Up to and including Very High Wind Zone

Balustrade Height, mm						
1000	**1050**	**1100**	**1150**	**1200**	**1250**	**1300 max**
1400	1350	1300	1250	1200	1150	1100
Post Spacing max, mm						

Extra High Wind Zone

17mm Balusters only
Balustrade Height, mm
1275 max
1400
Post Spacing max, mm

General Notes:
1 - All measurements mm
2 - Occupancy only A, A other and C3.
3 - Balustrade Height measured above Deck/FFL.
4 - Wind Zones as per NZS 3604:2011

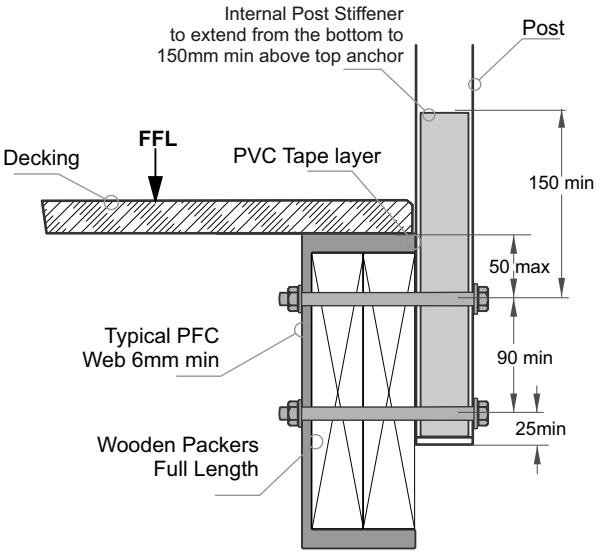

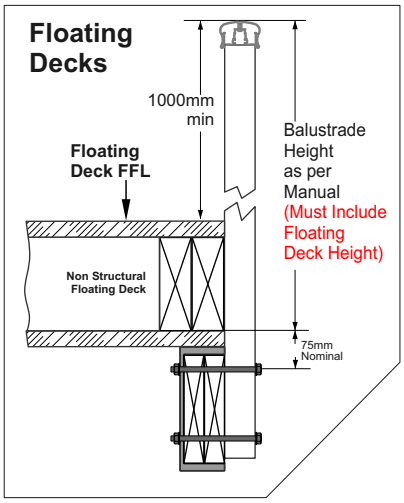

Important Installation notes:
1 - The Project Engineer must ensure the structure can support the appropriate loads
2 - Substructure shown indicatively only. Timber SG8 minimum strength
3 - A PVC Tape layer must be installed between the Post and Top Steel Flange
4 - All Fixings must be Stainless steel

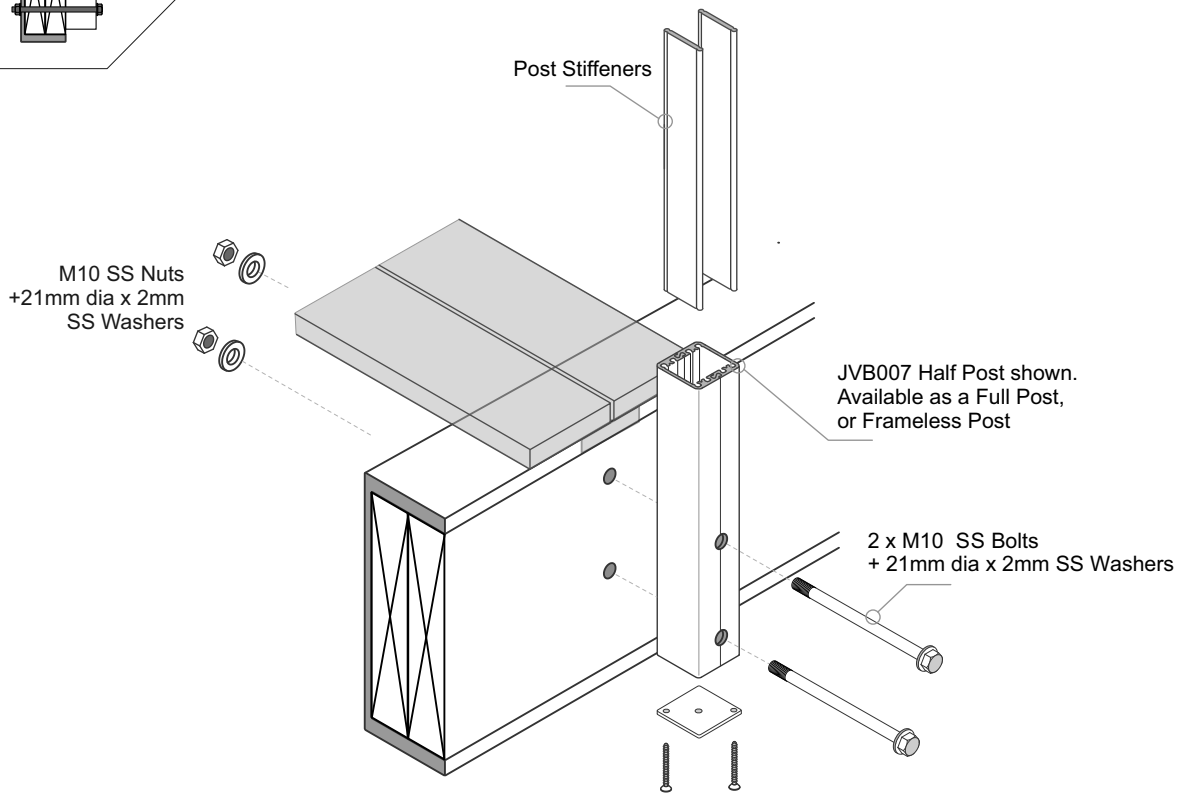

Typical FACE Fix Post to Steel + Wooden Packers - M10 SS Bolts

Balustrade Dimensions by Wind Zone

Up to and including Very High Wind Zone

Balustrade Height, mm						
1000	**1050**	**1100**	**1150**	**1200**	**1250**	**1300 max**
1400	1350	1300	1250	1200	1150	1100
Post Spacing max, mm						

Extra High Wind Zone

17mm Balusters only
Balustrade Height, mm
1275 max
1400
Post Spacing max, mm

General Notes:
1 - All measurements mm
2 - Occupancy only A, A other and C3.
3 - Balustrade Height measured above Deck/FFL.
4 - Wind Zones as per NZS 3604:2011

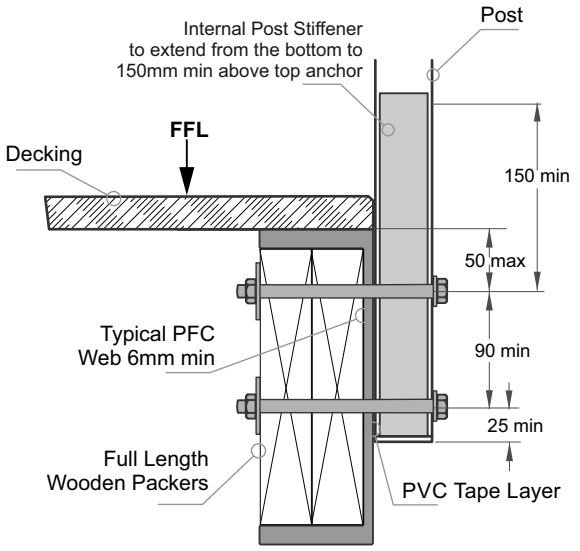

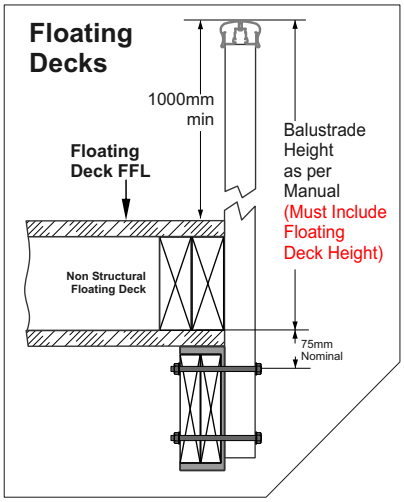

Important Installation notes:
1 - The Project Engineer must ensure the structure can support the appropriate loads
2 - Substructure shown indicatively only. Timber SG8 minimum strength
3 - A PVC Tape layer must be installed between the Post and Steel
4 - All Fixings must be Stainless steel

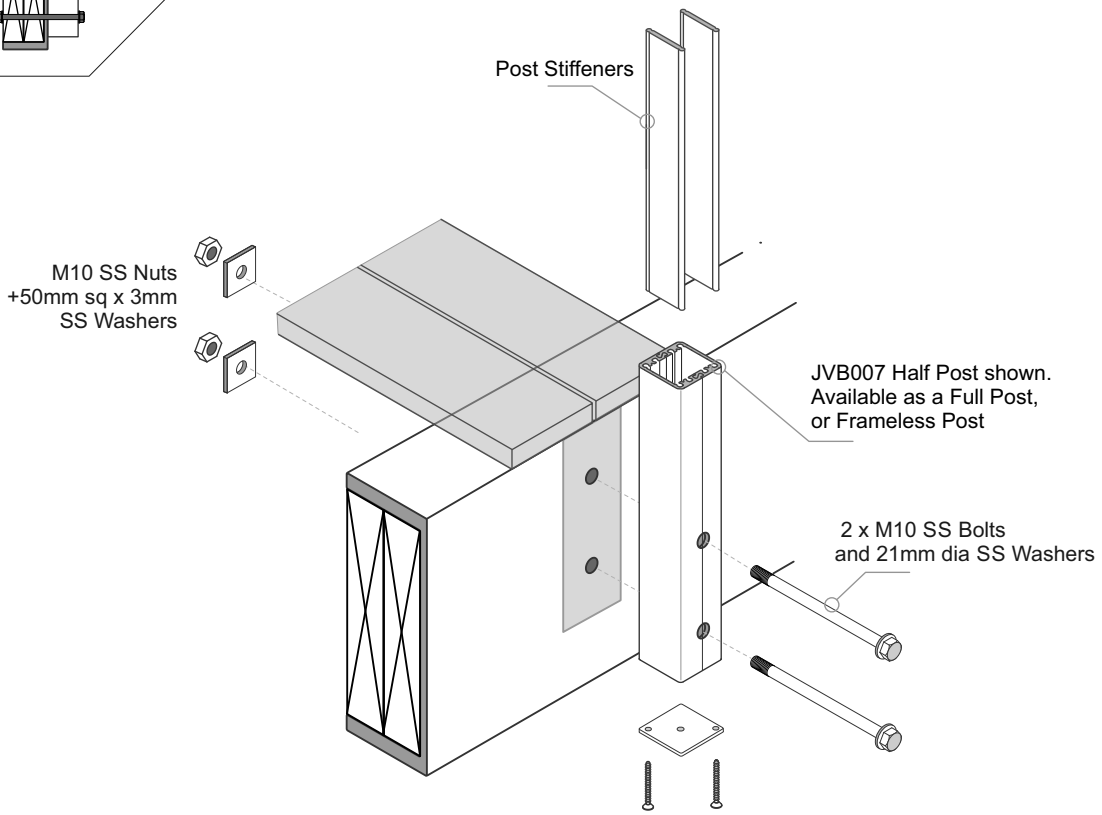

Typical FACE Fix to Steel - JVB137/45, Gutter Bracket - M10 SS Bolts

Balustrade Dimensions by Wind Zone

Up to and including Very High Wind Zone

Balustrade Height, mm						
1000	**1050**	**1100**	**1150**	**1200**	**1250**	**1300 max**
1400	1350	1300	1250	1200	1150	1100
Post Spacing max, mm						

Extra High Wind Zone

17mm Balusters only
Balustrade Height, mm
1275 max
1400
Post Spacing max, mm

General Notes:
1 - All measurements mm
2 - Occupancy only A, A other and C3.
3 - Balustrade Height measured above Deck/FFL.
4 - Wind Zones as per NZS 3604:2011

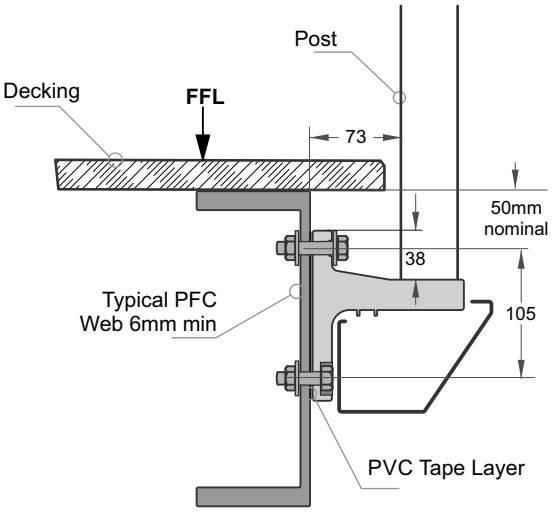

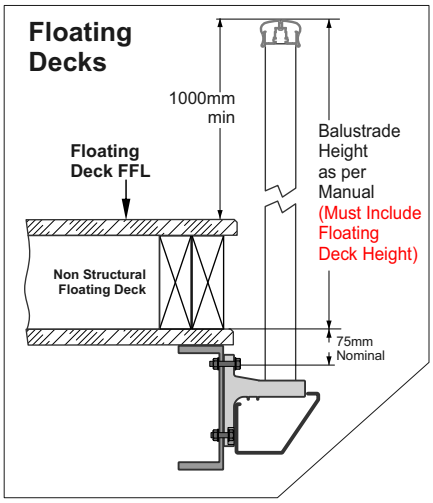

Important Installation notes:
1 - The Project Engineer must ensure the structure can support the appropriate loads
2 - Substructure shown indicatively only. Timber SG8 minimum strength
3 - A PVC Tape layer must be installed between the Gutter Bracket and Steel
4 - All Fixings must be Stainless steel

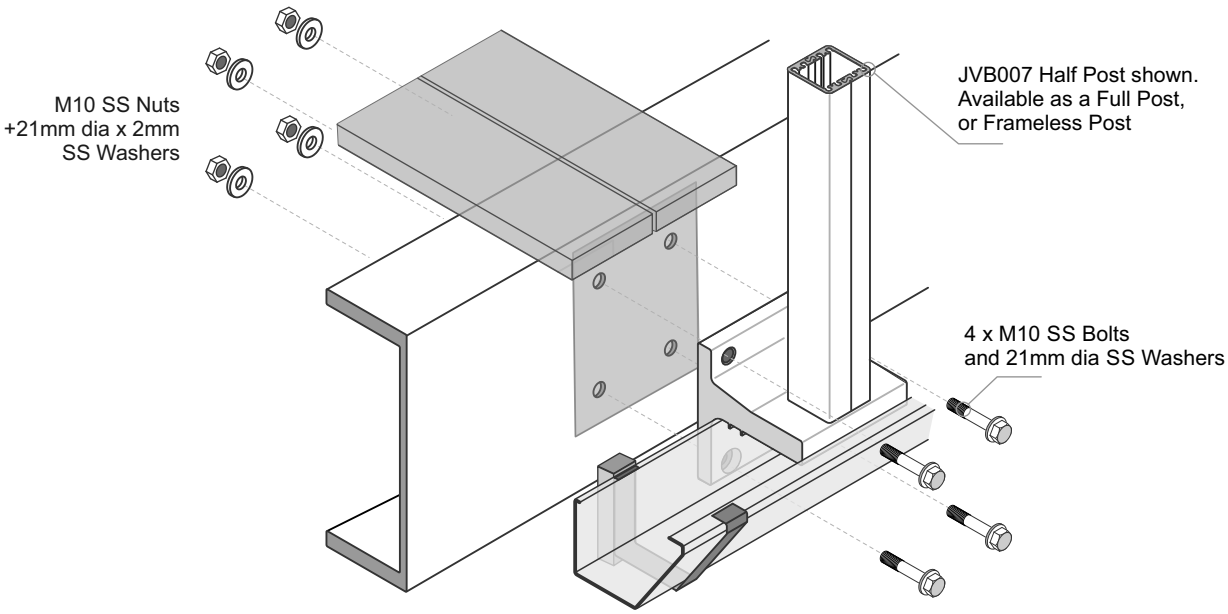

Gutter (if needed) - Runs under the JVB137/45 Gutter Bracket.
To be attached separately either side
of the Bracket to suit propriety guttering system.
Pack out to clear.

Typical TOP Fix to Concrete - JVB100, 100mm x 100mm, 4 hole Base Plate - M10 SS Studs

Balustrade Dimensions by Wind Zone

Up to and including Very High Wind Zone

Balustrade Height, mm						
1000	**1050**	**1100**	**1150**	**1200**	**1250**	**1300 max**
1400	1350	1300	1250	1150	1050	1000
Post Spacing max, mm						

Extra High Wind Zone

17mm Balusters only
Balustrade Height, mm
1275 max
1300
Post Spacing max, mm

General Notes:
1 - All measurements mm
2 - Occupancy only A, A other and C3.
3 - Balustrade Height measured above Deck/FFL.
4 - Wind Zones as per NZS 3604:2011
5 - Only Suitable for Ground Level sites.
NOT elevated

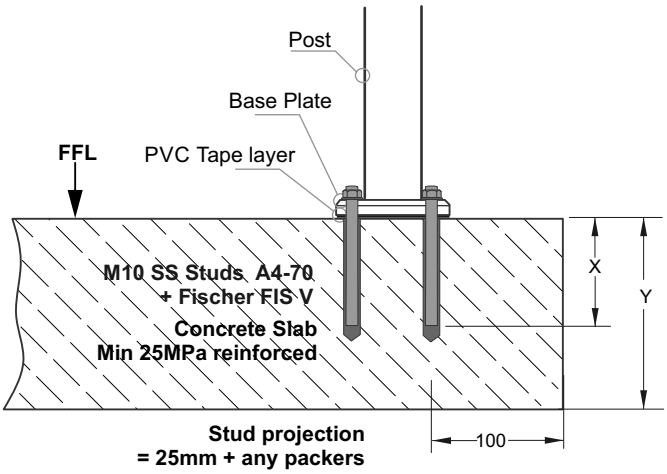

Concrete	X Anchorage depth	Y Min.slab thickness
Uncracked 25 MPa	75 mm	150 mm
Cracked 25 MPa	130 mm	170 mm

Installation details Fischer FIS V 300T

Thread diameter M10
Drill hole diameter = 12 mm

Anchorage depth = X

Drilling method Hammer drilling
Drill hole cleaning 4 times blowing,
4 times brushing,
4 times blowing

No borehole cleaning required in case of using a hollow drill bit, e.g. fischer FHD.

Important Installation Notes:
1 - The Project Engineer must ensure the structure can support the appropriate loads
2 - Substructure shown indicatively only
3 - Fixings must engage into the structural slab
4 - A PVC Tape layer must be installed between the Baseplate and Concrete
5 - Use Threadlok on Nuts
6 - All fixings must be Stainless Steel

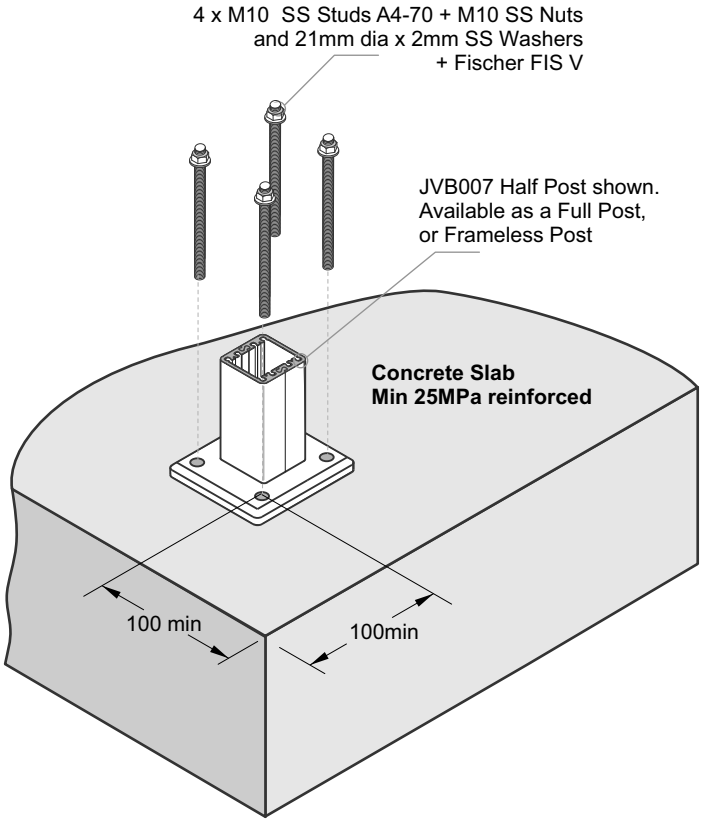

Typical TOP Fix to Thin Concrete - JVB100, 100mm x 100mm, 4 hole Base Plate - M10 SS Studs

Balustrade Dimensions - 17mm Balusters ONLY

Up to and including Extra High Wind Zone						
Balustrade Height, mm						
1000	**1050**	**1100**	**1150**	**1200**	**1250**	**1300 max**
1250	1200	1150	1100	1050	1050	1050
Post Spacing max, mm						

General Notes:
1 - All measurements mm
2 - Occupancy only A, A other and C3.
3 - Balustrade Height measured above Deck/FFL.
4 - Wind Zones as per NZS 3604:2011
5 - Only Suitable for Ground Level sites.
NOT elevated

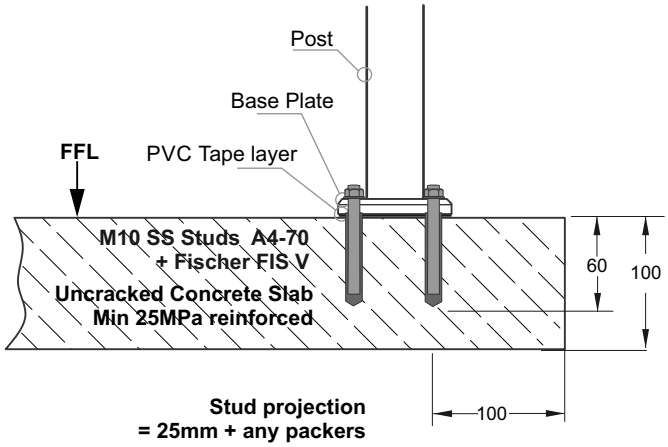

Installation details Fischer FIS V 300T

Thread diameter	M10
Drill hole diameter	= 12 mm
Drill hole depth	= 70mm
Anchorage depth	= 60 mm
Drilling method	Hammer drilling
Drill hole cleaning	4 times blowing, 4 times brushing, 4 times blowing

No borehole cleaning required in case of using a hollow drill bit, e.g. fischer FHD.

Important Installation Notes:
1 - The Project Engineer must ensure the structure can support the appropriate loads
2 - Substructure shown indicatively only
3 - Fixings must engage into the structural slab
4 - A PVC Tape layer must be installed between the Baseplate and Concrete
5 - Use Threadlok on Nuts
6 - All fixings must be Stainless Steel

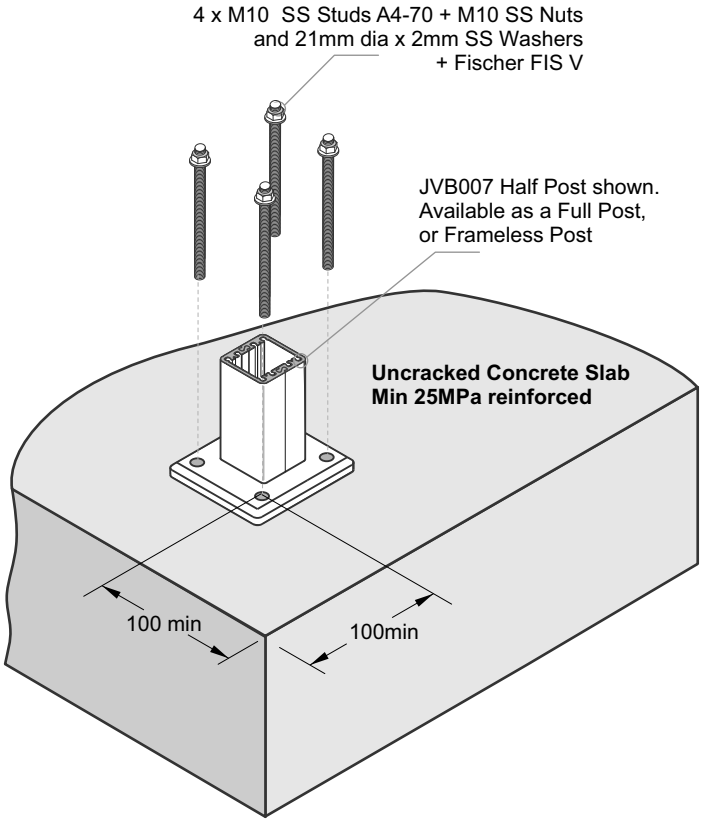

Typical TOP Fix to Concrete - JVB101, 110mm x 90mm, 2 hole Base Plate - M12 SS Studs

Balustrade Dimensions by Wind Zone

Up to and including Very High Wind Zone

Balustrade Height, mm						
1000	**1050**	**1100**	**1150**	**1200**	**1250**	**1300 max**
1100	1050	1000	900	800	750	700
Post Spacing max, mm						

Extra High Wind Zone

17mm Balusters only
Balustrade Height, mm
1275 max
900
Post Spacing max, mm

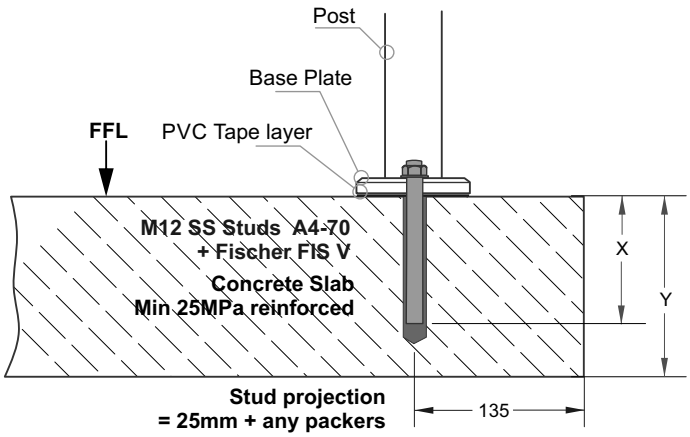

Concrete	X Anchorage depth	Y Min.slab thickness
Uncracked 25 MPa	75 mm	150 mm
Cracked 25 MPa	170 mm	200 mm

General Notes:
1 - All measurements mm
2 - Occupancy only A, A other and C3.
3 - Balustrade Height measured above Deck/FFL.
4 - Wind Zones as per NZS 3604:2011
5 - Only Suitable for Ground Level sites.
NOT elevated

Installation details Fischer FIS V 300T

Thread diameter M12
Drill hole diameter = 14 mm

Anchorage depth = X

Drilling method Hammer drilling
Drill hole cleaning 4 times blowing,
4 times brushing,
4 times blowing

No borehole cleaning required in case of using a hollow drill bit, e.g. fischer FHD.

Important Installation Notes:
1 - The Project Engineer must ensure the structure can support the appropriate loads
2 - Substructure shown indicatively only
3 - Fixings must engage into the structural slab
4 - A PVC Tape layer must be installed between the Baseplate and Concrete
5 - Use Threadlok on Nuts
6 - All fixings must be Stainless Steel

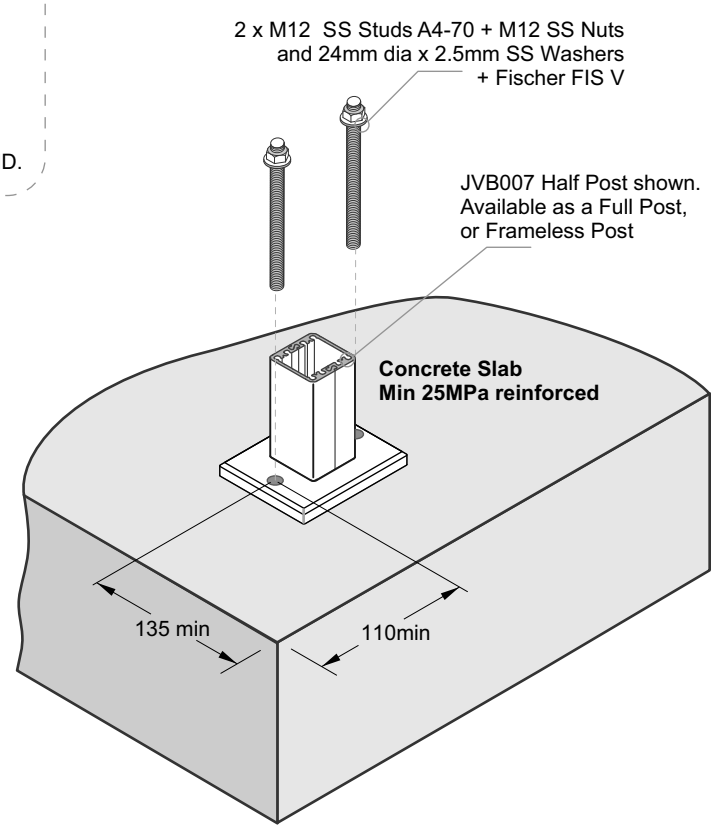

Typical TOP Fix to Concrete - Embed Post in Concrete Slab

Balustrade Dimensions by Wind Zone

Up to and including Very High Wind Zone

Balustrade Height, mm						
1000	**1050**	**1100**	**1150**	**1200**	**1250**	**1300 max**
1400	1350	1300	1250	1200	1150	1100
Post Spacing max, mm						

Extra High Wind Zone

17mm Balusters only
Balustrade Height, mm
1275 max
1400
Post Spacing max, mm

General Notes:
1 - All measurements mm
2 - Occupancy only A, A other and C3.
3 - Balustrade Height measured above Deck/FFL.
4 - Wind Zones as per NZS 3604:2011
5- Only Suitable for Ground Level sites.
NOT elevated

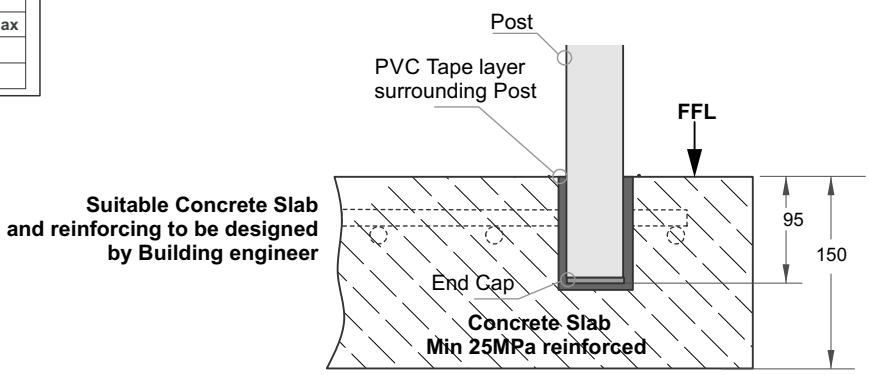

Important Installation notes:
1 - The Project Engineer must ensure the structure can support the appropriate loads
2 - Substructure shown indicatively only
3 - A PVC Tape layer must completely surround the Post
4 - Mortar pocket 60mm sq or 80mm dia.
Avoid mortar splashes on exposed aluminium. Wash off immediately.

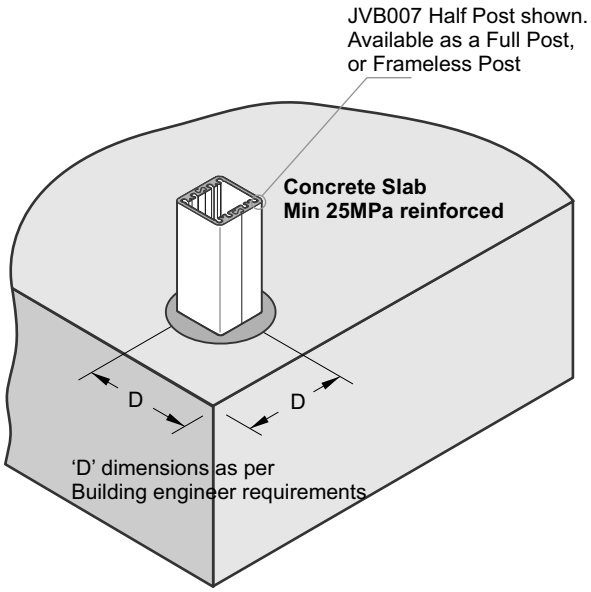

Typical TOP Fix to Concrete - Embed Post into Ground

Balustrade Dimensions by Wind Zone

Up to and including Very High Wind Zone						
Balustrade Height, mm						
1000	**1050**	**1100**	**1150**	**1200**	**1250**	**1300 max**
1400	1350	1300	1250	1200	1150	1100
Post Spacing max, mm						

Extra High Wind Zone
17mm Balusters only
Balustrade Height, mm
1275 max
1400
Post Spacing max, mm

General Notes:
1 - All measurements mm
2 - Occupancy only A, A other and C3.
3 - Balustrade Height measured above Deck/FFL.
4 - Wind Zones as per NZS 3604:2011
5 - Only Suitable for Ground Level sites.
NOT elevated

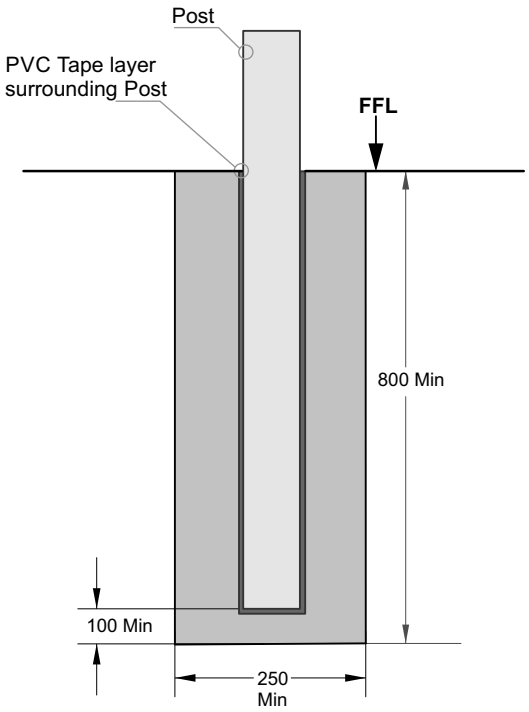

The typical foundation design assumes good ground with 100 kPa minimum allowable bearing and minimum ultimate shear strength capacity of 60 kPa, which is to be verified on site by a qualified person.
Please inform the engineer if the assumed ground condition is not met.

Important Installation notes:
1 - The Project Engineer must ensure the structure can support the appropriate loads
2 - Substructure shown indicatively only
3 - A PVC Tape layer must completely surround the Post
4 - Mortar pocket 60mm sq or 80mm dia.
Avoid mortar splashes on exposed aluminium. Wash off immediately.

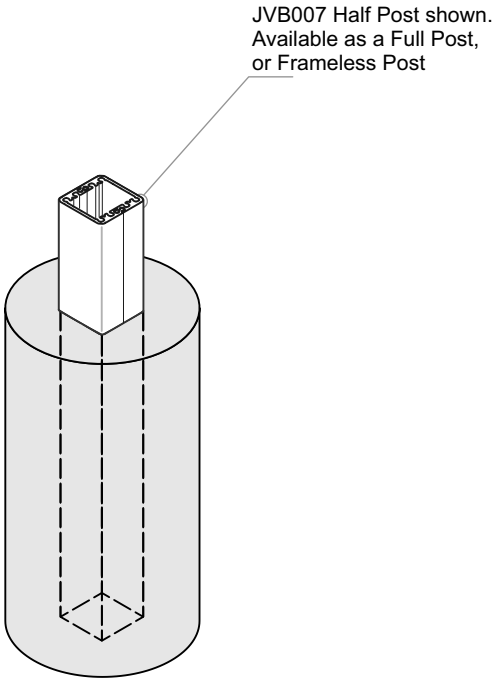

Typical FACE Fix Post to Concrete - M10 SS Studs

Balustrade Dimensions by Wind Zone

Up to and including Very High Wind Zone						
Balustrade Height, mm						
1000	**1050**	**1100**	**1150**	**1200**	**1250**	**1300 max**
1200	1100	1000	900	850	800	750
Post Spacing max, mm						

Extra High Wind Zone
17mm Balusters only
Balustrade Height, mm
1275 max
1000
Post Spacing max, mm

General Notes:
1 - All measurements mm
2 - Occupancy only A, A other and C3.
3 - Balustrade Height measured above Deck/FFL.
4 - Wind Zones as per NZS 3604:2011

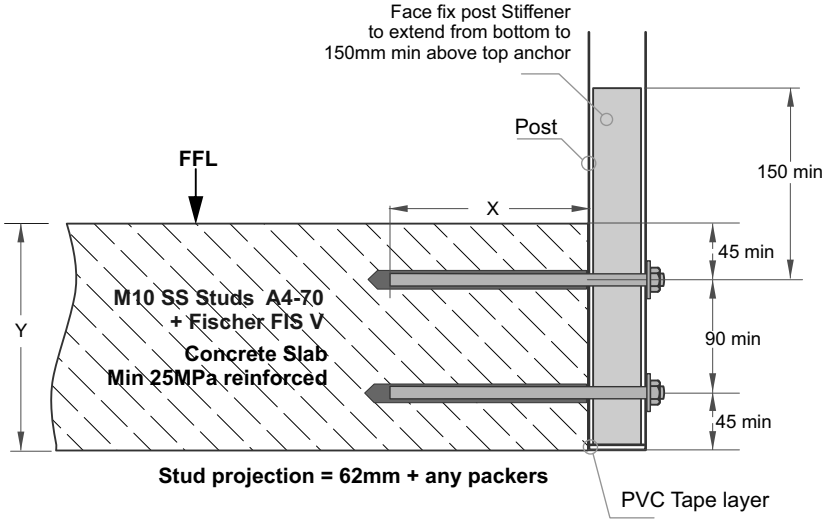

Concrete	X Anchorage depth	Y Min.slab thickness	(ED) Edge Distance
Uncracked 25 MPa	75 mm	150 mm	120 mm
Cracked 25 MPa	170 mm	200 mm	170 mm

Installation details Fischer FIS V 300T

Thread diameter	M10
Drill hole diameter	= 12 mm
Anchorage depth	= X
Drilling method	Hammer drilling
Drill hole cleaning	4 times blowing, 4 times brushing, 4 times blowing

No borehole cleaning required in case of using a hollow drill bit, e.g. fischer FHD.

Important Installation Notes:
1 - The Project Engineer must ensure the structure can support the appropriate loads
2 - Substructure shown indicatively only
3 - Fixings must engage into the structural slab
4 - A PVC Tape layer must be installed between the Post and Concrete
5 - Use Threadlok on Nuts
6 - All fixings must be Stainless Steel

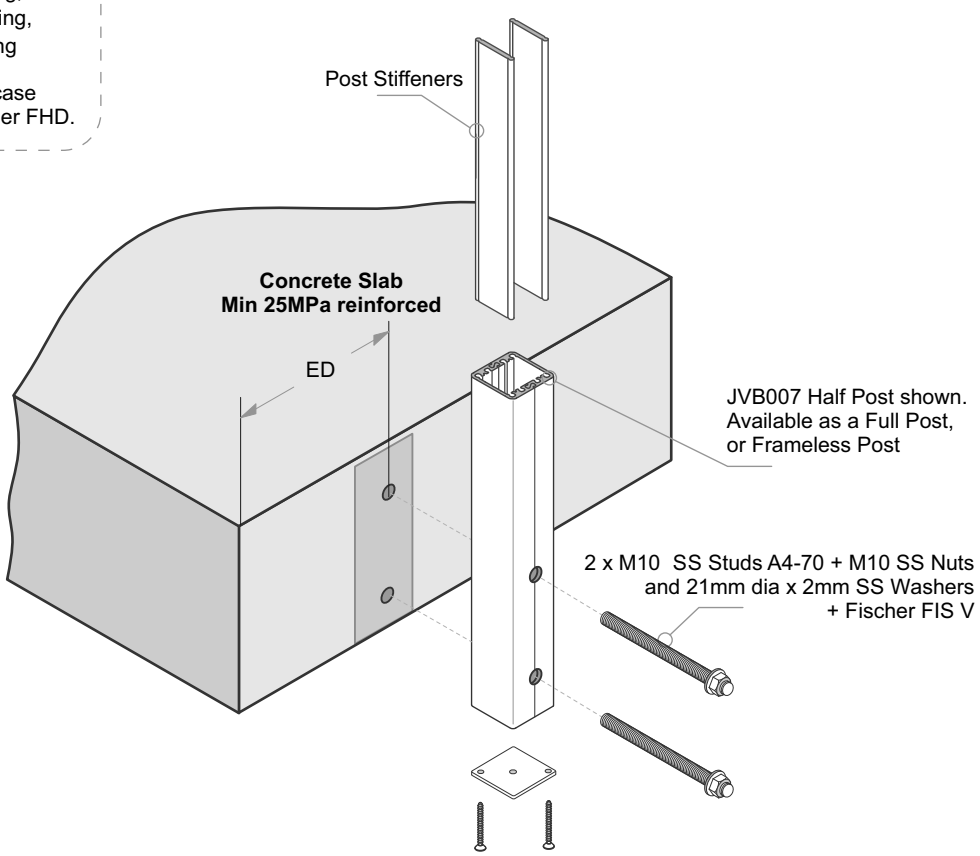

Typical FACE Fix Post to Blockwall - M12 SS Studs

Balustrade Dimensions by Wind Zone

Up to and including Very High Wind Zone

Balustrade Height, mm						
1000	**1050**	**1100**	**1150**	**1200**	**1250**	**1300 max**
1400	1350	1300	1200	1100	1000	900
Post Spacing max, mm						

Extra High Wind Zone

17mm Balusters only
Balustrade Height, mm
1275 max
1300
Post Spacing max, mm

General Notes:
1 - All measurements mm
2 - Occupancy only A, A other and C3.
3 - Balustrade Height measured above Deck/FFL.
4 - Wind Zones as per NZS 3604:2011

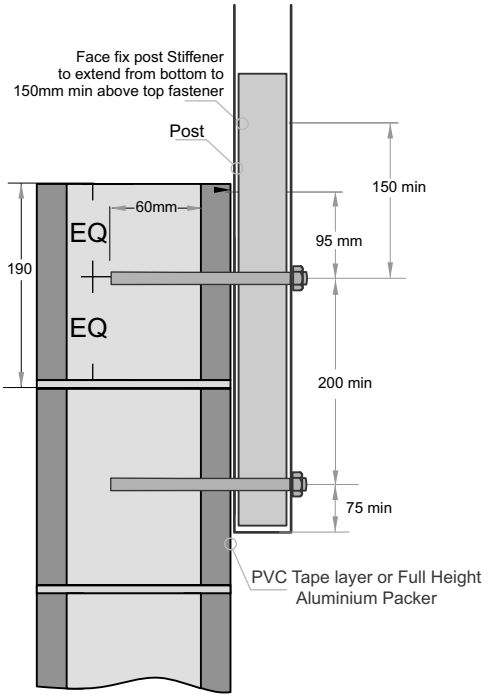

Installation details Hilti RE-500 V4

Thread diameter M10
Drill hole diameter = 14 mm

Anchorage depth = 60mm

Drilling method Hammer drilling
Drill hole cleaning 4 times blowing,
4 times brushing,
4 times blowing

No borehole cleaning required in case of using a hollow drill bit.

Important Installation Notes:
1 - The Project Engineer must ensure the structure can support the appropriate loads
2 - Substructure shown indicatively only
3 - Fixings must engage into block wall core
4 - A PVC Tape layer must be installed between the Post and Concrete
5 - Use Threadlok on Nuts
6 - All fixings must be Stainless Steel

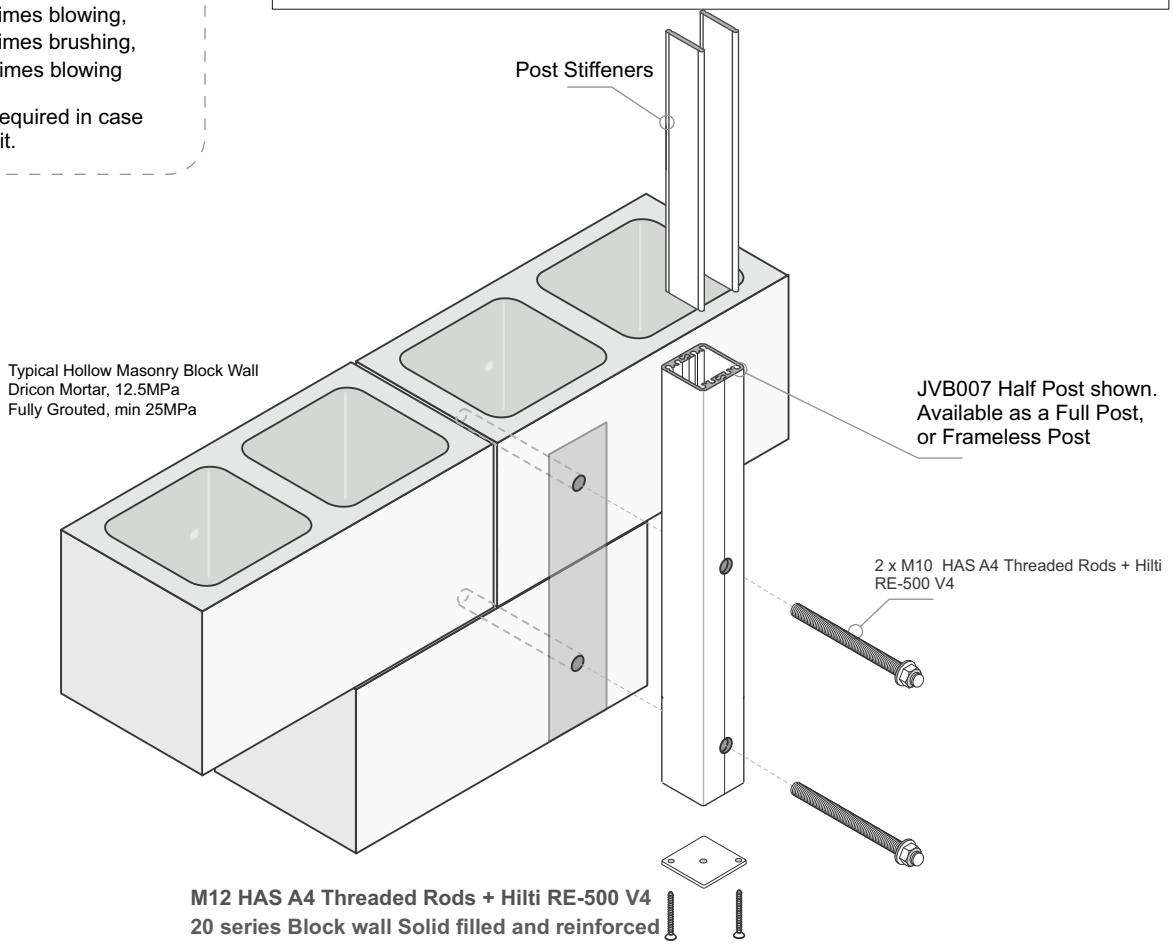

M12 HAS A4 Threaded Rods + Hilti RE-500 V4
20 series Block wall Solid filled and reinforced with 25MPa concrete

Typical Gutter Bracket Face Fix to Blockwall - M10 SS Studs

Balustrade Dimensions by Wind Zone

Up to and including Very High Wind Zone

Balustrade Height, mm						
1000	**1050**	**1100**	**1150**	**1200**	**1250**	**1300 max**
1200	1200	1200	1200	800	800	800
Post Spacing max, mm						

Extra High Wind Zone

17mm Balusters only
Balustrade Height, mm
1275 max
1200
Post Spacing max, mm

General Notes:
1 - All measurements mm
2 - Occupancy only A, A other and C3.
3 - Balustrade Height measured above Deck/FFL.
4 - Wind Zones as per NZS 3604:2011

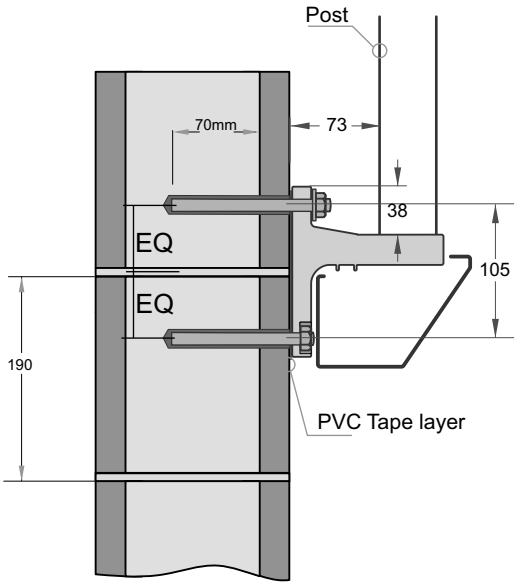

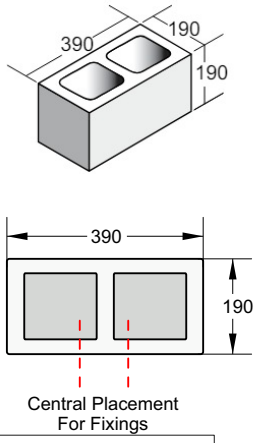

Installation details Hilti RE-500 V4

Thread diameter	M10
Drill hole diameter	= 14 mm
Anchorage depth	= 70mm
Drilling method	Hammer drilling
Drill hole cleaning	4 times blowing, 4 times brushing, 4 times blowing

No borehole cleaning required in case of using a hollow drill bit.

Important Installation Notes:
1 - The Project Engineer must ensure the structure can support the appropriate loads
2 - Substructure shown indicatively only
3 - Fixings must engage into the core
4 - A PVC Tape layer must be installed between the Post and Concrete
5 - Use Threadlok on Nuts
6 - All fixings must be Stainless Steel

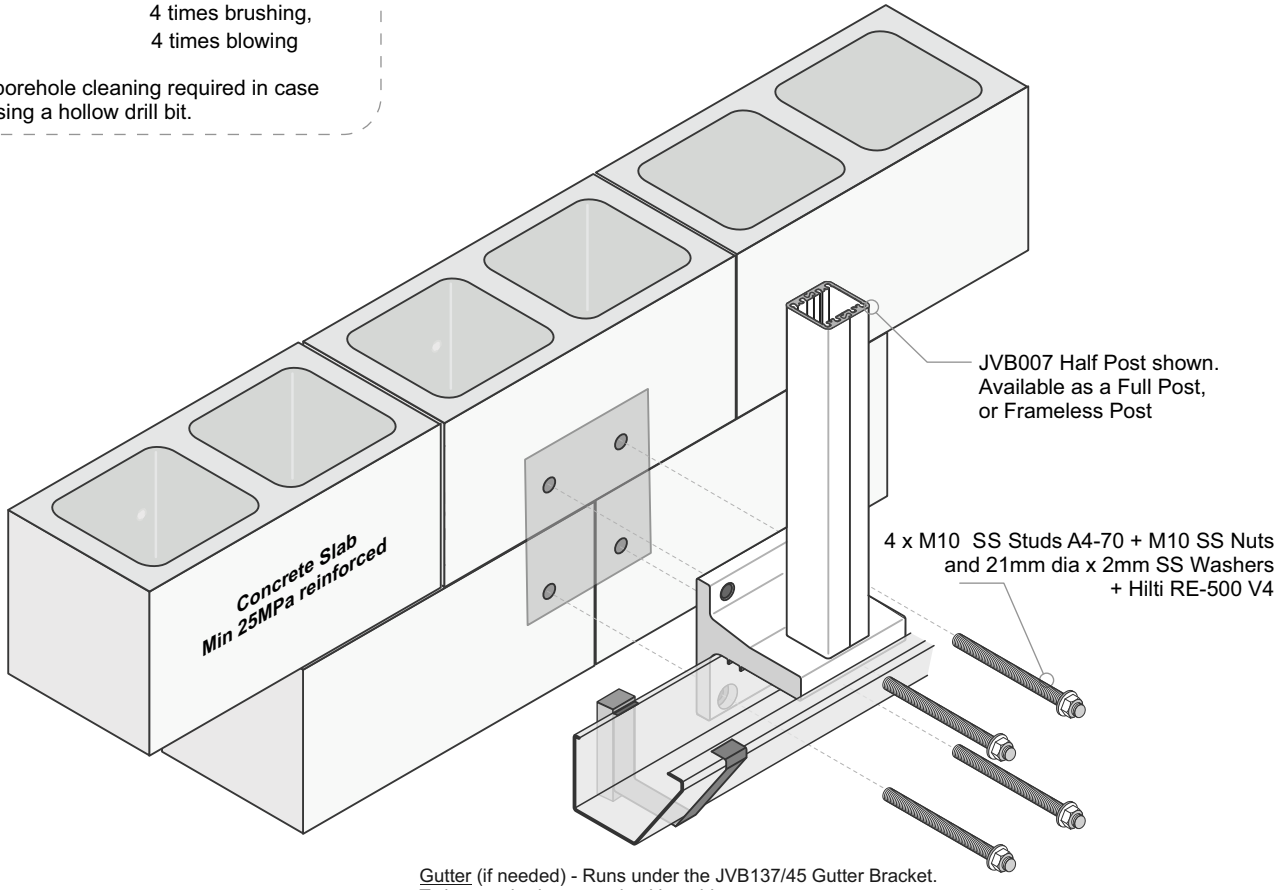

Gutter (if needed) - Runs under the JVB137/45 Gutter Bracket.
To be attached separately either side
of the Bracket to suit propriety guttering system.
Pack out to clear.

Typical FACE Fix to Concrete - JVB137/45, Gutter Bracket - M10 SS Studs

Balustrade Dimensions by Wind Zone

Up to and including Very High Wind Zone						
Balustrade Height, mm						
1000	**1050**	**1100**	**1150**	**1200**	**1250**	**1300 max**
1400	1350	1300	1250	1200	1150	1100
Post Spacing max, mm						

Extra High Wind Zone
17mm Balusters only
Balustrade Height, mm
1275 max
1400
Post Spacing max, mm

General Notes:
1 - All measurements mm
2 - Occupancy only A, A other and C3.
3 - Balustrade Height measured above Deck/FFL.
4 - Wind Zones as per NZS 3604:2011

Installation details Fischer FIS V 300T

Thread diameter M10
Drill hole diameter = 12 mm

Anchorage depth = X

Drilling method Hammer drilling
Drill hole cleaning 4 times blowing,
4 times brushing,
4 times blowing

No borehole cleaning required in case of using a hollow drill bit, e.g. fischer FHD.

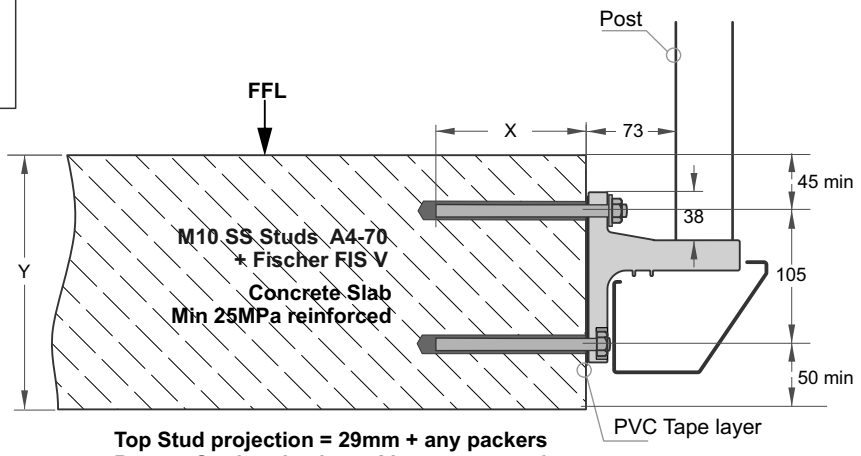

Top Stud projection = 29mm + any packers
Bottom Stud projection = 20mm + any packers

Concrete	X Anchorage depth	Y Min.slab thickness	(ED) Edge Distance
Uncracked 25 MPa	120 mm	200 mm	100 mm
Cracked 25 MPa	200 mm	200 mm	100 mm

Important Installation Notes:
1 - The Project Engineer must ensure the structure can support the appropriate loads
2 - Substructure shown indicatively only
3 - Fixings must engage into the structural slab
4 - A PVC Tape layer must be installed between the Gutter Bracket and Concrete
5 - Use Threadlok on Nuts
6 - All fixings must be Stainless Steel

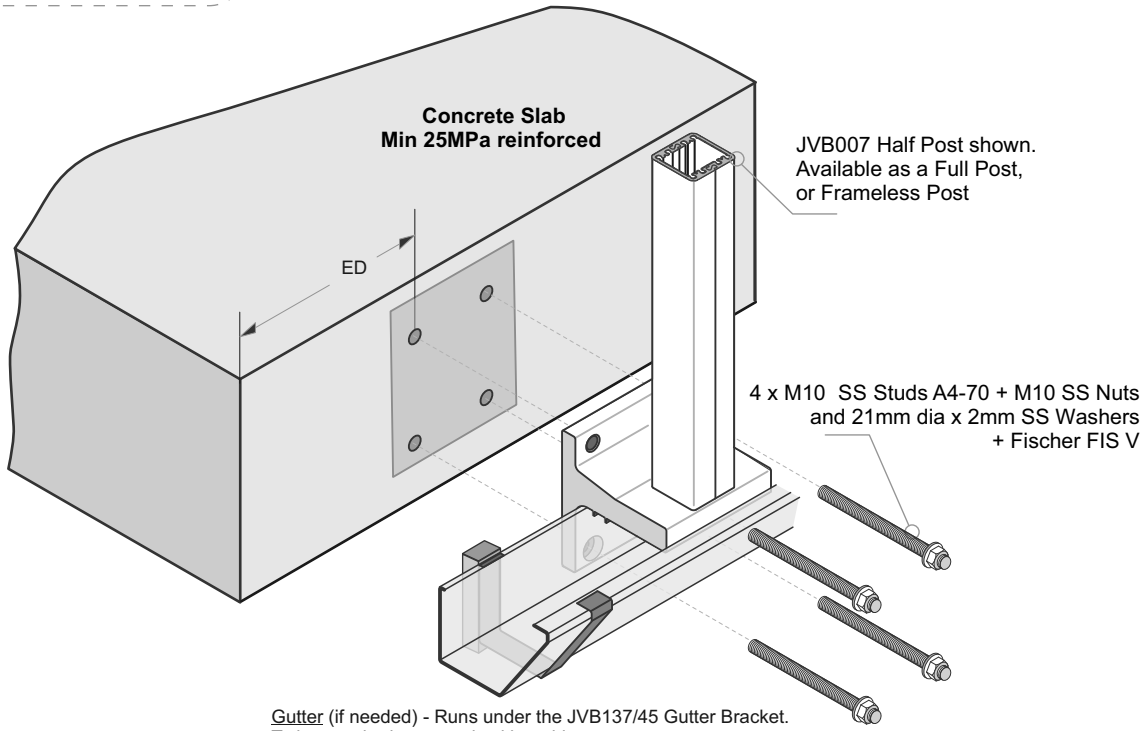

Gutter (if needed) - Runs under the JVB137/45 Gutter Bracket.
To be attached separately either side
of the Bracket to suit propriety guttering system.
Pack out to clear.

Typical TOP Fix to Timber - JVB121, 110mm x 90mm, 4 hole Base Plate - M10 SS Coachscrews or Bolts

The pre NZS3604:2011 mounting details are included for older, existing buildings. New buildings must comply with NZS3604:2011- Double Boundary Joists

Balustrade Dimensions by Wind Zone

Up to and including Very High Wind Zone

Balustrade Height, mm				
1000	**1050**	**1100**	**1150**	**1200**
1400	1350	1300	1250	1200
Post Spacing max, mm				

Extra High Wind Zone

NOT SUITABLE.

General Notes:
1 - All measurements mm
2 - Occupancy only A, A other and C3.
3 - Balustrade Height measured above Deck/FFL.
4 - Wind Zones as per NZS 3604:2011

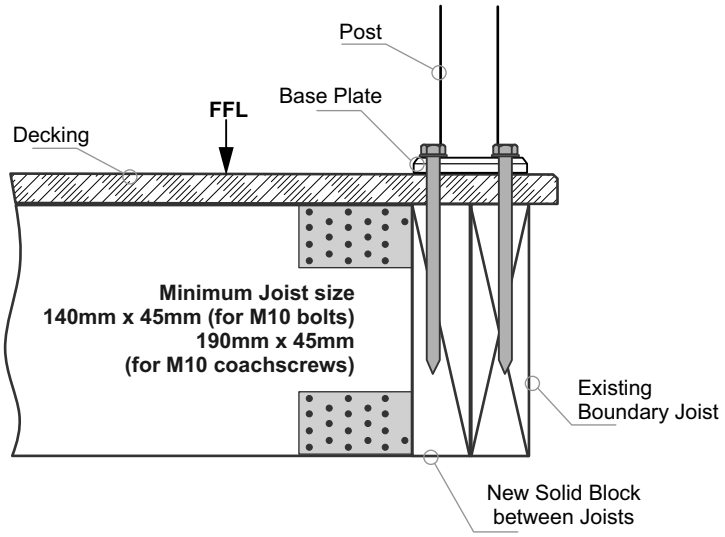

Important Installation notes:
1 - The Project Engineer must ensure the structure can support the appropriate loads
2 - Substructure shown indicatively only. New Timber SG8 minimum strength
3 - Coachscrews 130mm min engagement into joists, predrill 6mm hole
4 - Bond all coachscrews with SIKA Supergrip to full depth
5 - All Fixings must be Stainless steel

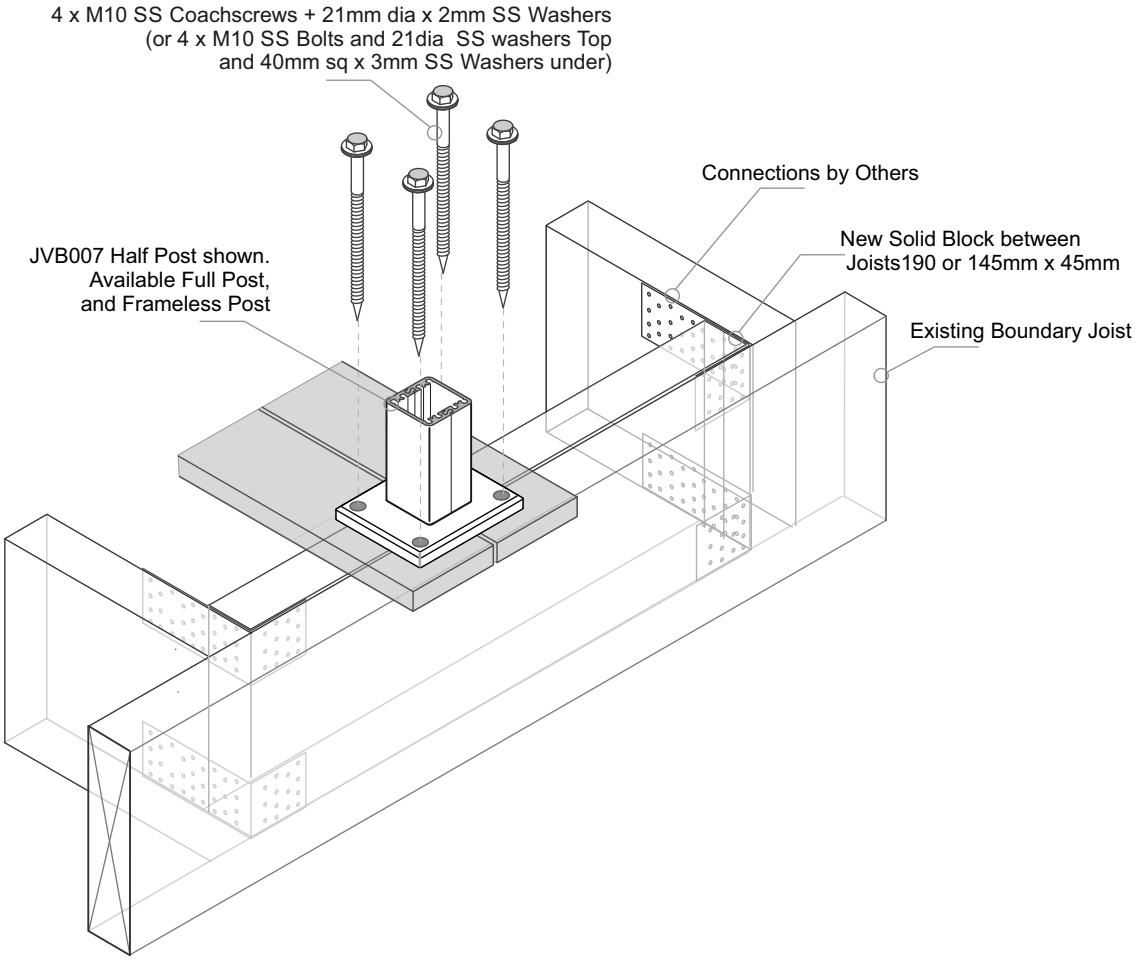

Typical TOP Fix to Timber - JVB100, 100mm x 100mm, 4 hole Base Plate - M10 SS Coachscrews or Bolts

The pre NZS3604:2011 mounting details are included for older, existing buildings. New buildings must comply with NZS3604:2011- Double Boundary Joists

Balustrade Dimensions by Wind Zone

Up to and including Very High Wind Zone

Balustrade Height, mm				
1000	**1050**	**1100**	**1150**	**1200**
1400	1350	1300	1250	1200
Post Spacing max, mm				

Extra High Wind Zone

NOT SUITABLE.

General Notes:
1 - All measurements mm
2 - Occupancy only A, A other and C3.
3 - Balustrade Height measured above Deck/FFL.
4 - Wind Zones as per NZS 3604:2011

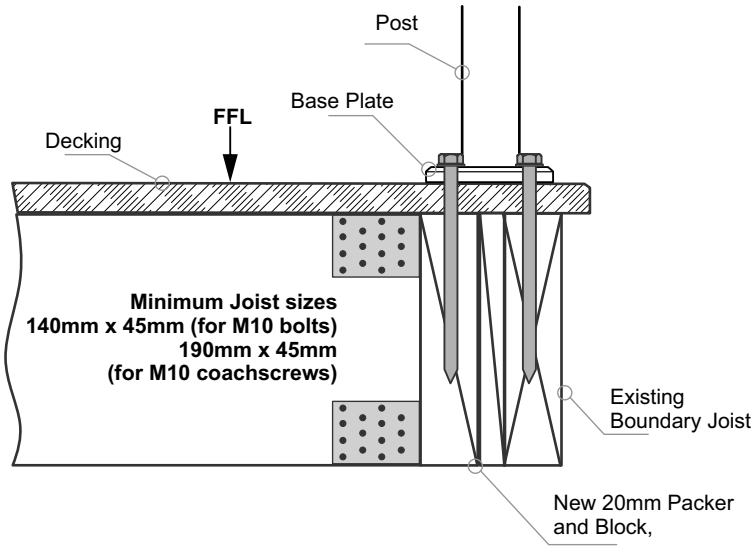

Important Installation notes:
1 - The Project Engineer must ensure the structure can support the appropriate loads
2 - Substructure shown indicatively only. New Timber SG8 minimum strength
3 - Coachscrews 130mm min engagement into joists, predrill 6mm hole
4 - Bond all coachscrews with SIKA Supergrip to full depth
5 - All Fixings must be Stainless steel

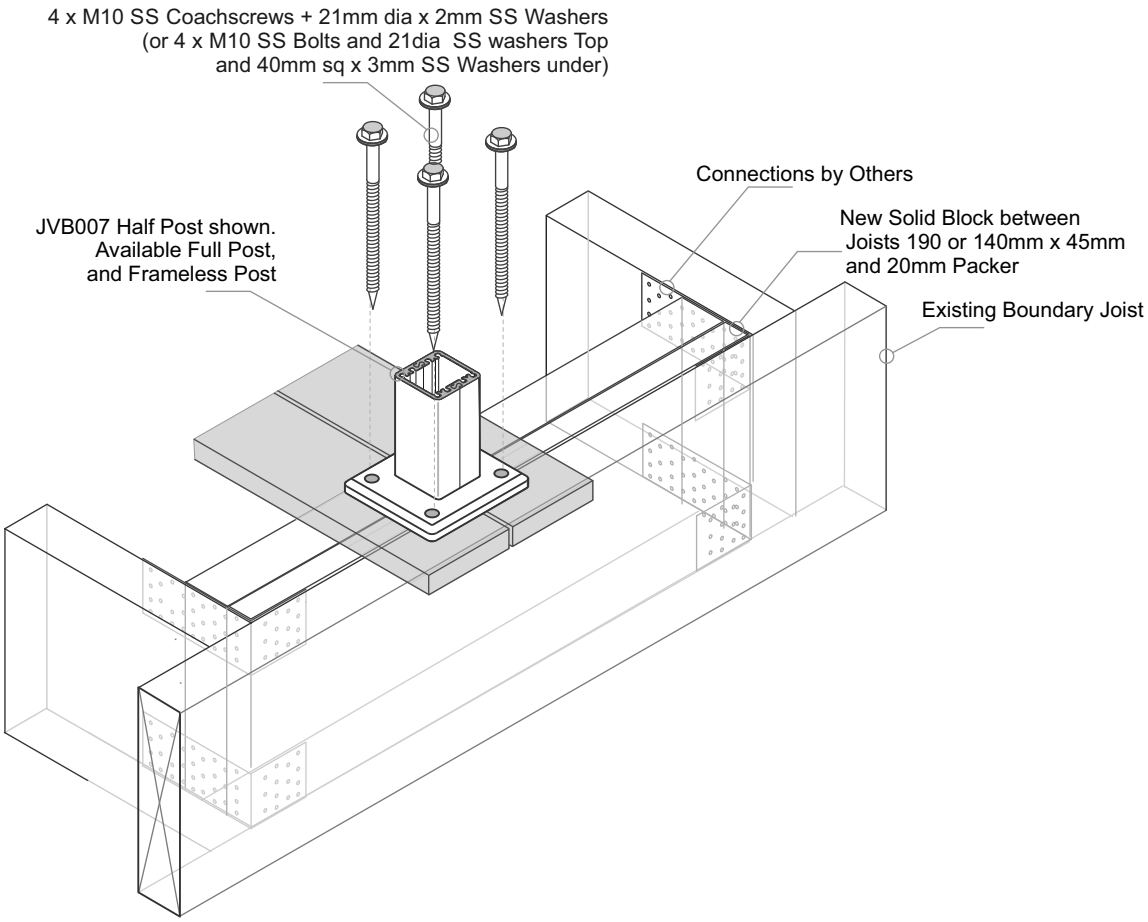

Typical FACE Fix Post to Timber - M10 SS Bolts or Threaded Rod

The pre NZS3604:2011 mounting details are included for older, existing buildings. New buildings must comply with NZS3604:2011- Double Boundary Joists

Balustrade Dimensions by Wind Zone

Up to and including Very High Wind Zone

Balustrade Height, mm				
1000	**1050**	**1100**	**1150**	**1200**
1400	1350	1300	1250	1200
Post Spacing max, mm				

Extra High Wind Zone

NOT SUITABLE.

General Notes:
1 - All measurements mm
2 - Occupancy only A, A other and C3.
3 - Balustrade Height measured above Deck/FFL.
4 - Wind Zones as per NZS 3604:2011

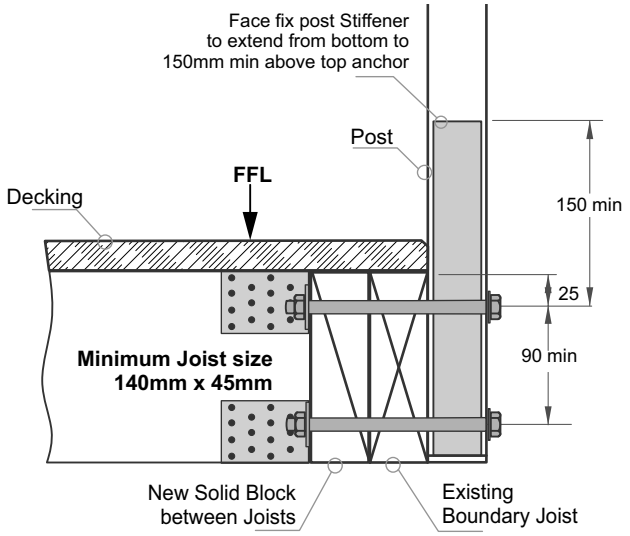

Important Installation notes:
1 - The Project Engineer must ensure the structure can support the appropriate loads
2 - Substructure shown indicatively only. New Timber SG8 minimum strength
3 - All Fixings must be Stainless steel

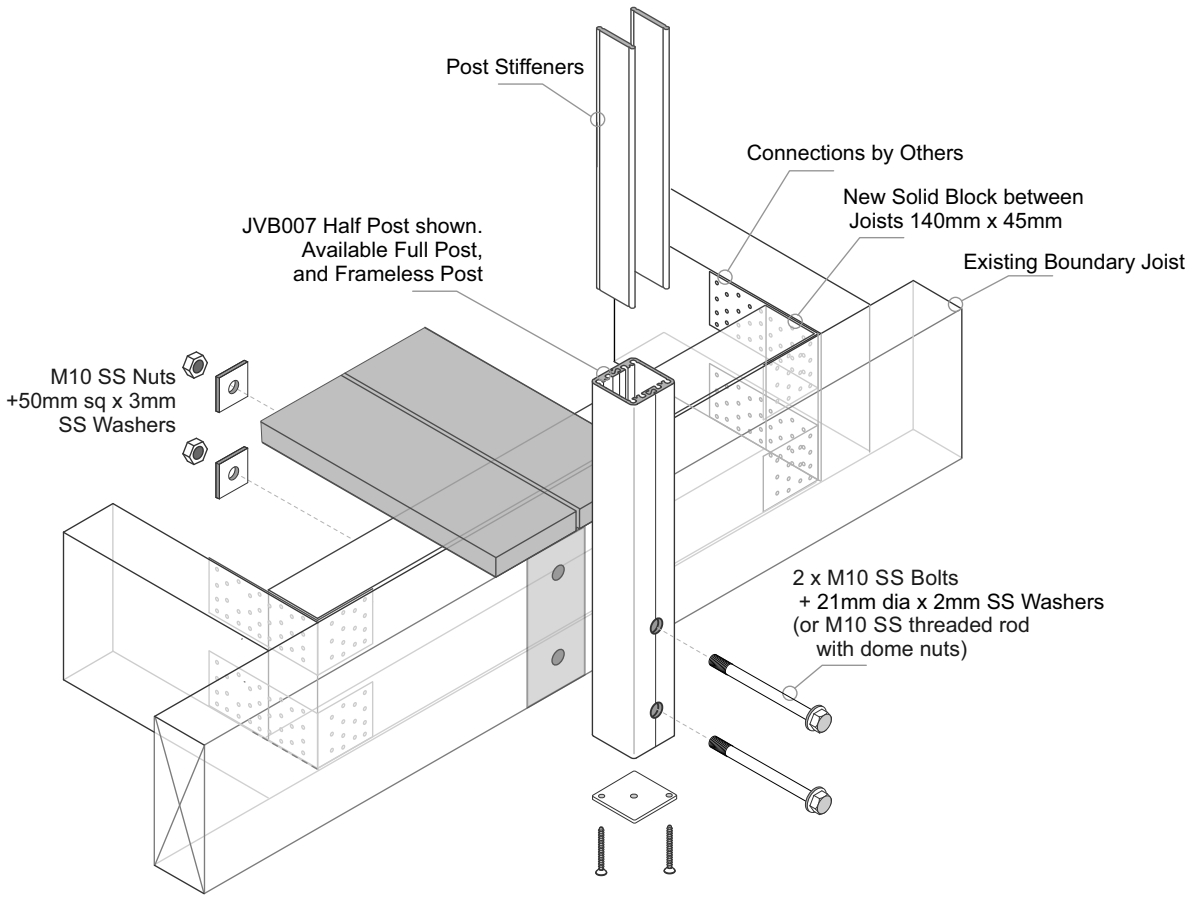

Juralco Viking® Balustrade Systems - Typical Post Fixing
Pre NZS3604:2011 - Single Boundary Joist + Block

Typical FACE Fix Post to Timber - M10 SS Coachscrews

The pre NZS3604:2011 mounting details are included for older, existing buildings. New buildings must comply with NZS3604:2011- Double Boundary Joists

Balustrade Dimensions by Wind Zone

Up to and including Very High Wind Zone

Balustrade Height, mm				
1000	**1050**	**1100**	**1150**	**1200**
1400	1350	1300	1250	1200
Post Spacing max, mm				

Extra High Wind Zone

NOT SUITABLE.

General Notes:
1 - All measurements mm
2 - Occupancy only A, A other and C3.
3 - Balustrade Height measured above Deck/FFL.
4 - Wind Zones as per NZS 3604:2011

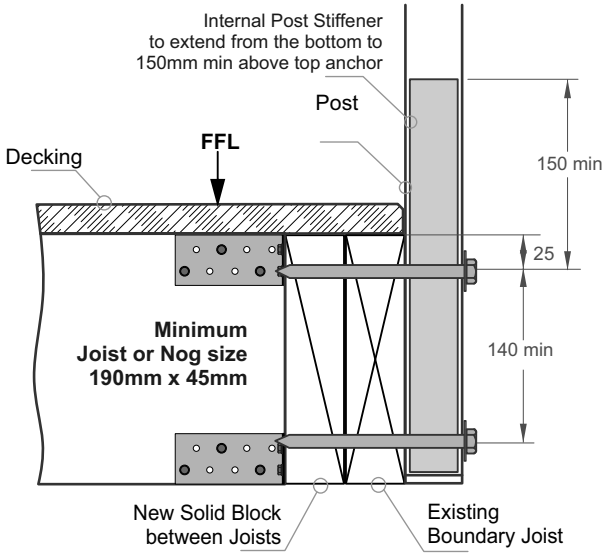

Important Installation notes:
1 - The Project Engineer must ensure the structure can support the appropriate loads
2 - Substructure shown indicatively only. New Timber SG8 minimum strength
3 - Coachscrews 90mm min engagement into joists, predrill 6mm hole
4 - Bond all coachscrews with SIKA Supergrip to full depth
5 - All Fixings must be Stainless steel

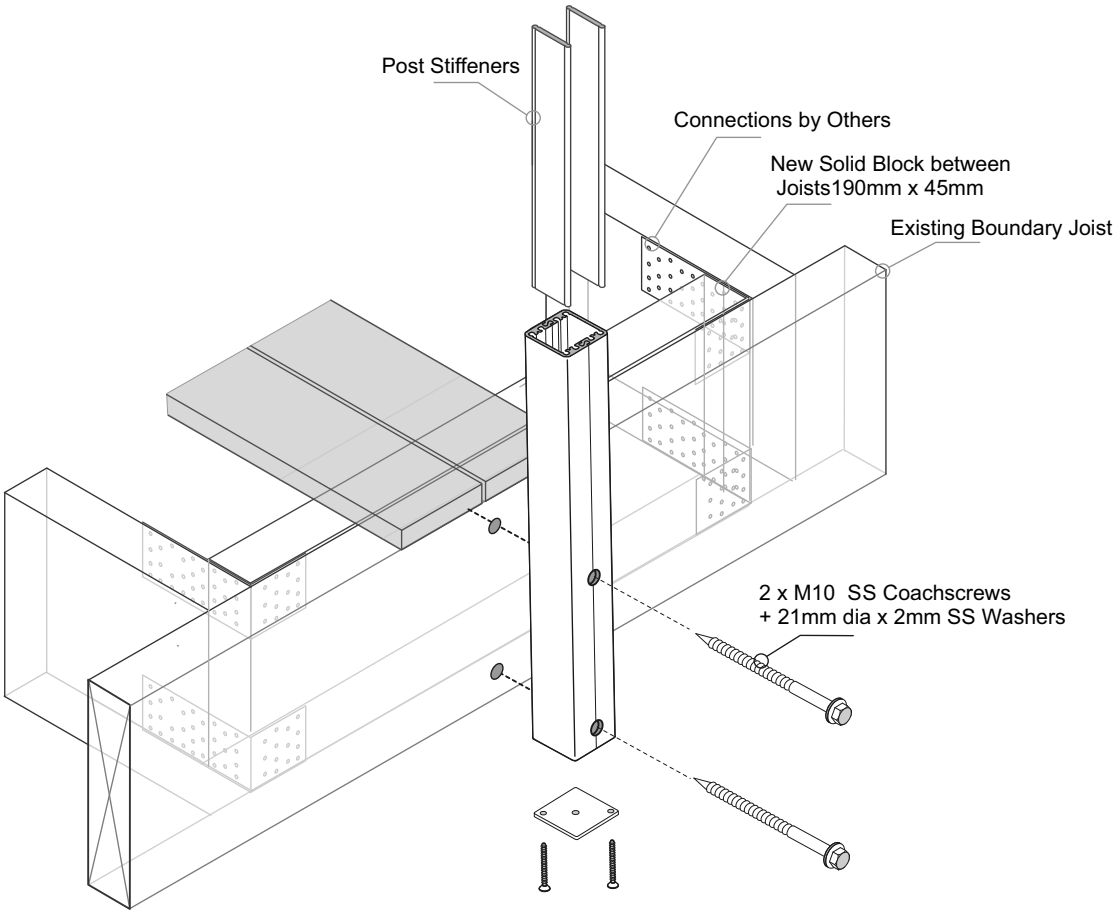

Typical FACE Fix to Timber - JVB137/45, Gutter Bracket - M10 SS Coachscrews

The pre NZS3604:2011 mounting details are included for older, existing buildings. New buildings must comply with NZS3604:2011- Double Boundary Joists

Balustrade Dimensions by Wind Zone.

Up to and including Very High Wind Zone

Balustrade Height, mm				
1000	**1050**	**1100**	**1150**	**1200**
1400	1350	1300	1250	1200
Post Spacing max, mm				

Extra High Wind Zone

NOT SUITABLE.

General Notes:
1 - All measurements mm
2 - Occupancy only A, A other and C3.
3 - Balustrade Height measured above Deck/FFL.
4 - Wind Zones as per NZS 3604:2011

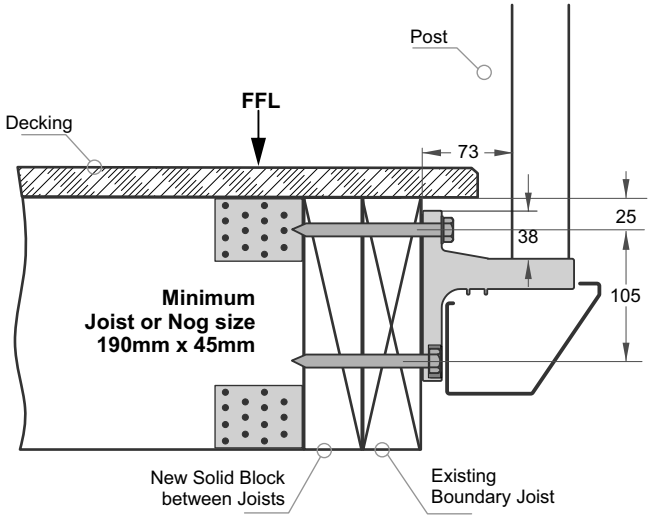

Important Installation notes:
1 - The Project Engineer must ensure the structure can support the appropriate loads
2 - Substructure shown indicatively only. New Timber SG8 minimum strength
3 - Coachscrews 90mm min engagement into joists, predrill 6mm hole
4 - Bond all coachscrews with SIKA Supergrip to full depth
5 - All Fixings must be Stainless steel

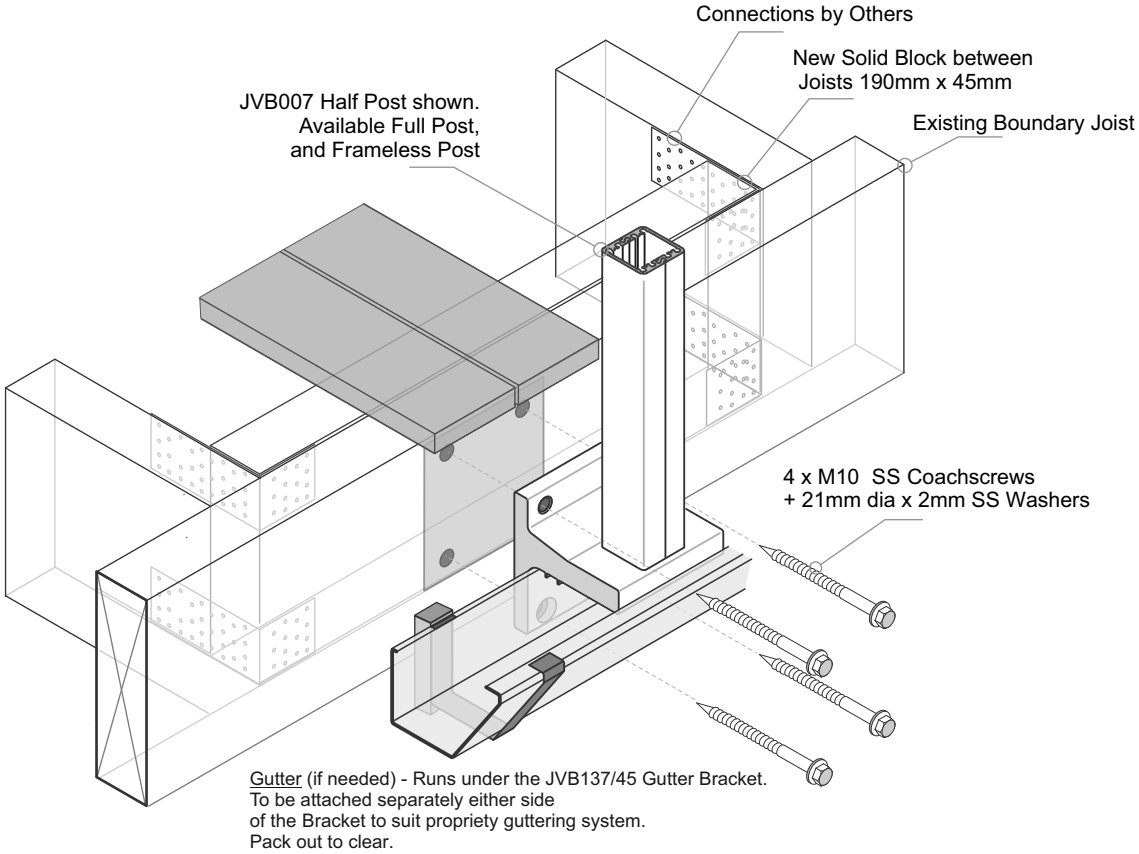

Juralco Viking® Balustrade Systems - Typical Post Fixing
Pre NZS3604:2011 - Single Boundary Joist + Block

Typical FACE Fix to Timber - JVB137/45, Gutter Bracket - M10 SS Bolts

The pre NZS3604:2011 mounting details are included for older, existing buildings. New buildings must comply with NZS3604:2011- Double Boundary Joists

Balustrade Dimensions by Wind Zone

Up to and including Very High Wind Zone

Balustrade Height, mm				
1000	**1050**	**1100**	**1150**	**1200**
1400	1350	1300	1250	1200
Post Spacing max, mm				

Extra High Wind Zone

NOT SUITABLE.

General Notes:
1 - All measurements mm
2 - Occupancy only A, A other and C3.
3 - Balustrade Height measured above Deck/FFL.
4 - Wind Zones as per NZS 3604:2011

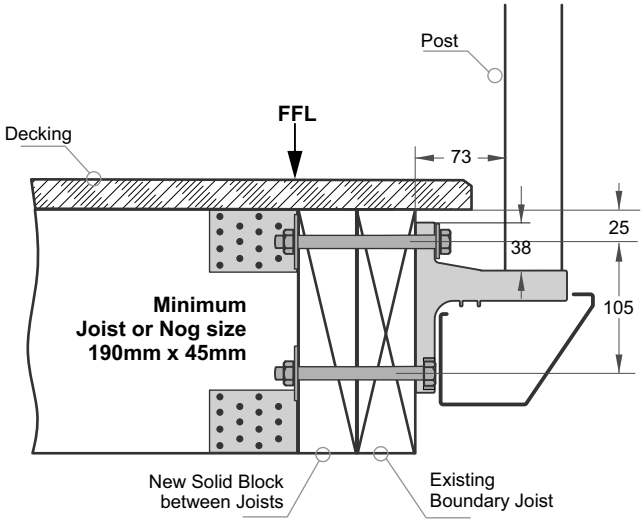

Important Installation notes:
1 - The Project Engineer must ensure the structure can support the appropriate loads
2 - Substructure shown indicatively only. New Timber SG8 minimum strength
3 - All Fixings must be Stainless steel

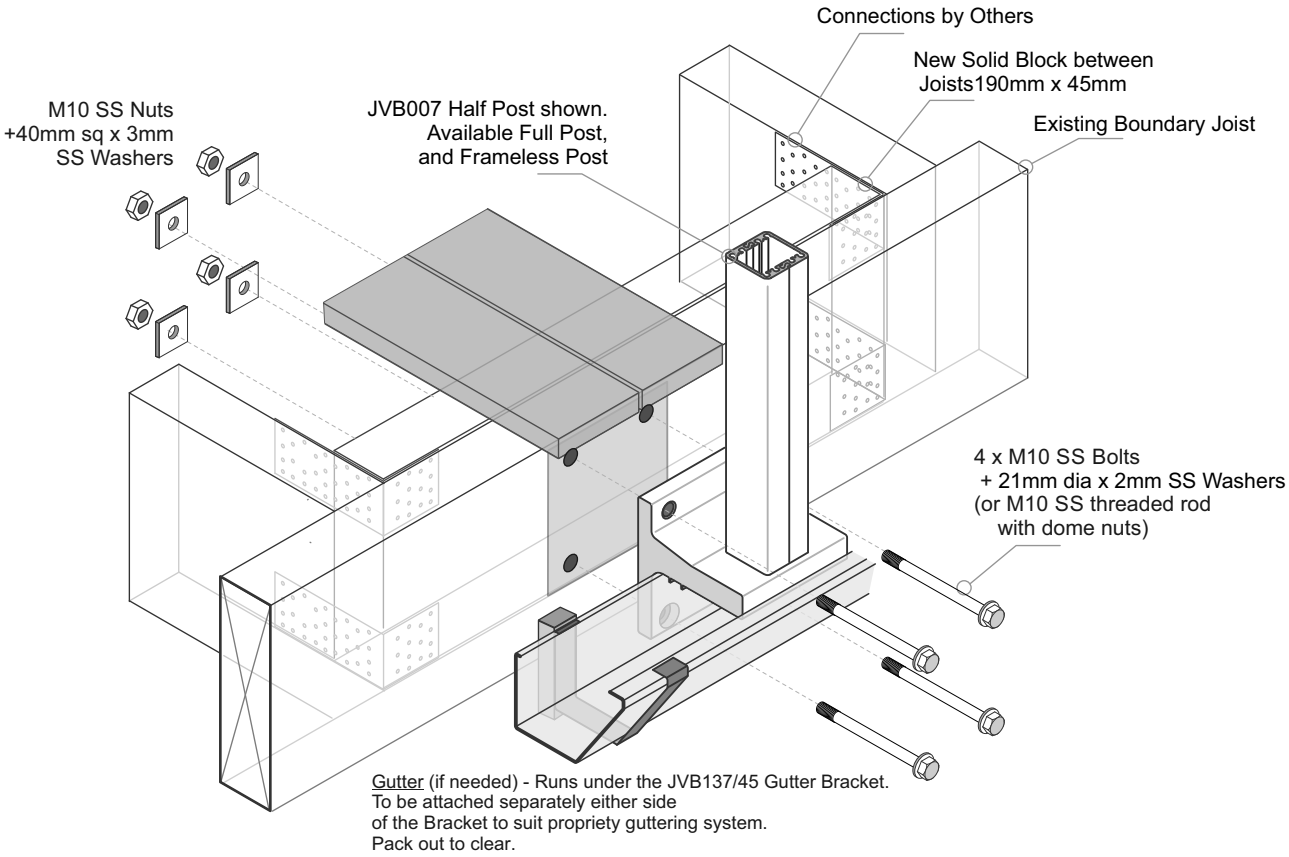

Typical Assembly - One Piece Post to Rail

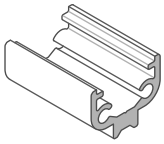

Cut Spigot 30mm long

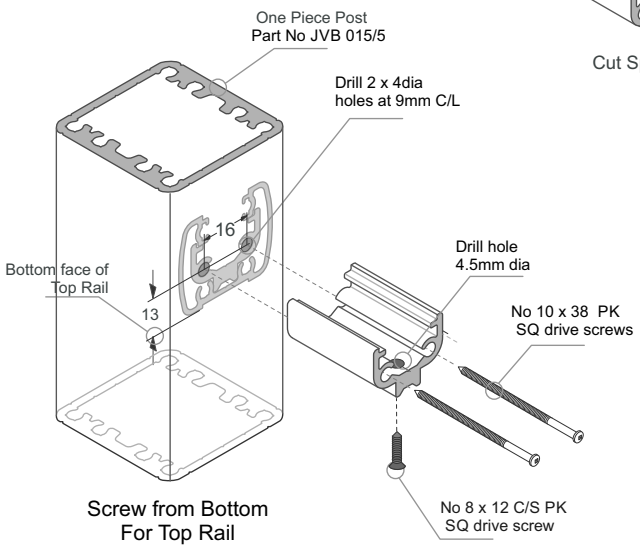

Screw from Bottom
For Top Rail

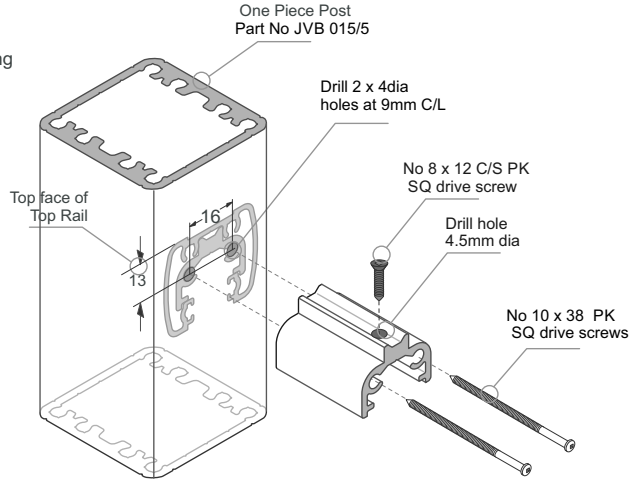

Screw from Top
For Top Rail

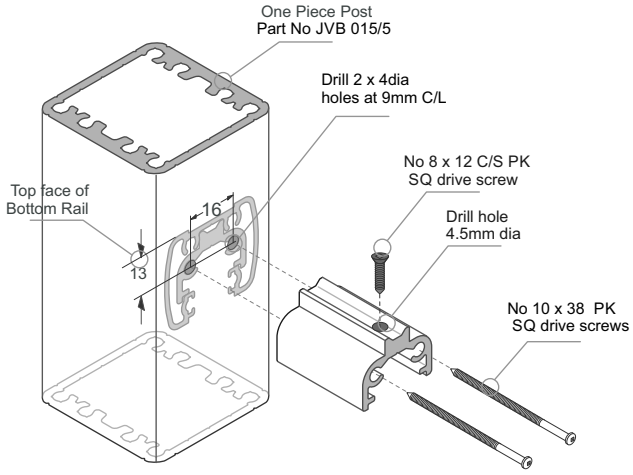

Screw from Top
for Bottom Rail

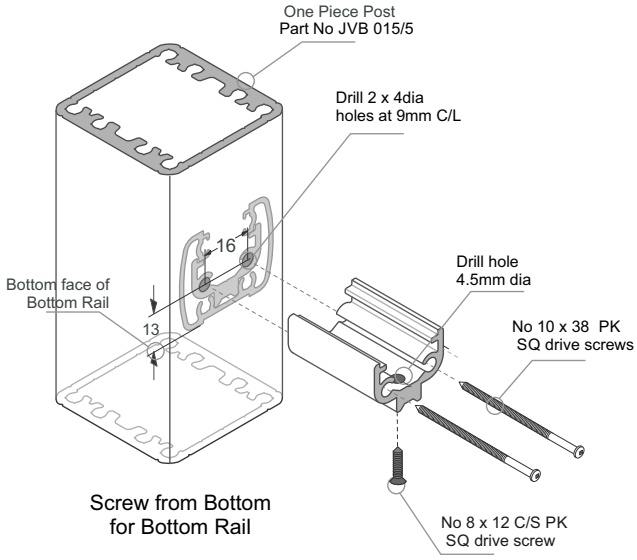

Screw from Bottom
for Bottom Rail

This Setout for Baluster Installations

This Setout for Glass Installations

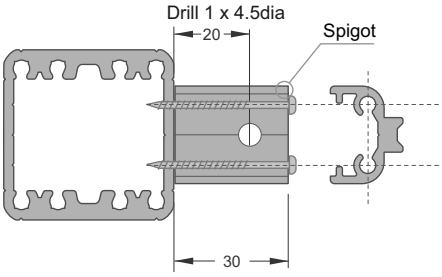

Attaching Bottom or Top Rail
to One Piece Post
Part No JVB 015/5

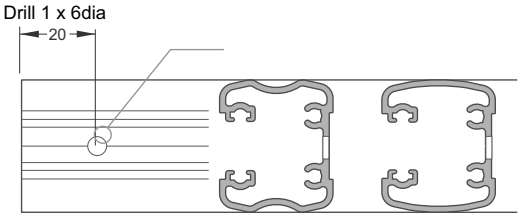

Drill Bottom Rail, Top rail if needed

6mm Toughened Glass - Full Height. Handrail + Split Rails. Top Fix

1 - Refer Post Mounting type and installation Wind zone. Then choose Balustrade Height and max Post spacing.

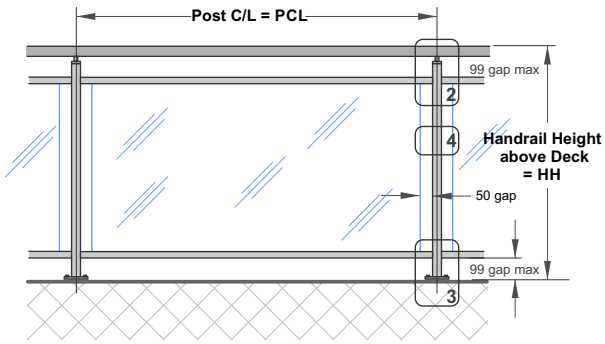

2 - Handrail - Offsets

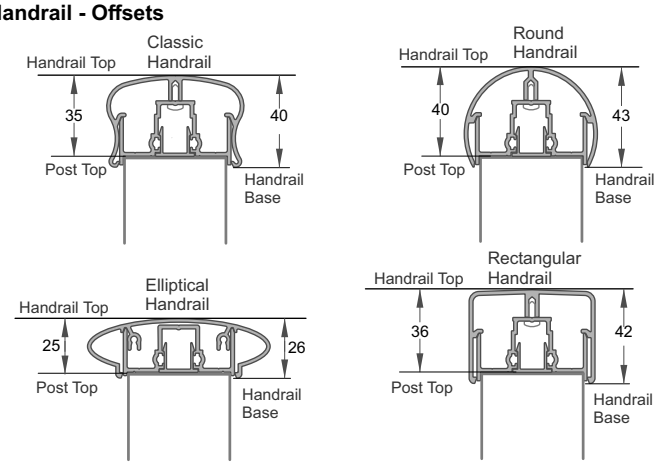

A
For Post Height.
Post Top to Handrail Top
25-40 Depending on chosen Handrail

B
For Top Gap Height
Handrail Base to Handrail Top
26-43 Depending on chosen Handrail

Important Note: All Glass Engagements 10mm min

3 - Post Height offsets

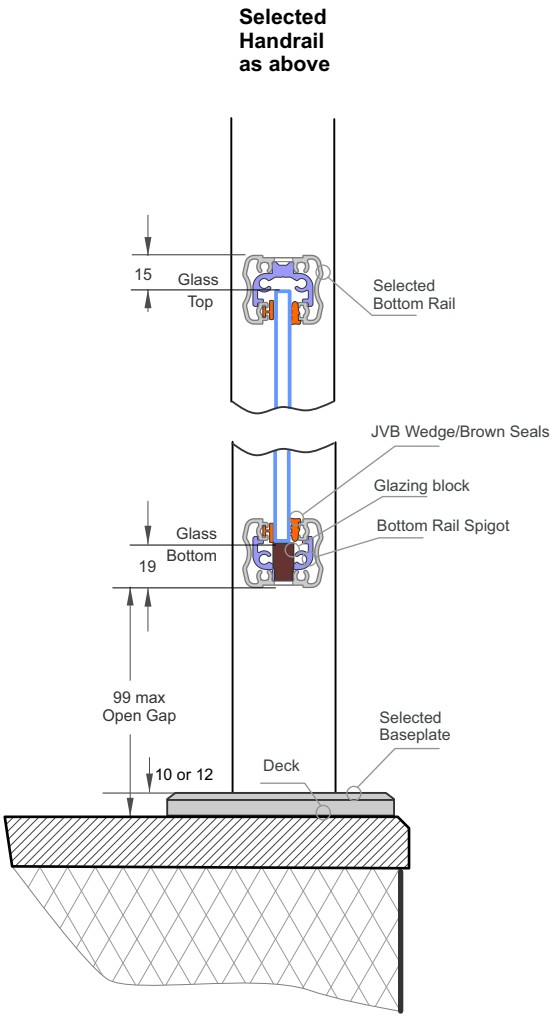

4 - Width Offsets

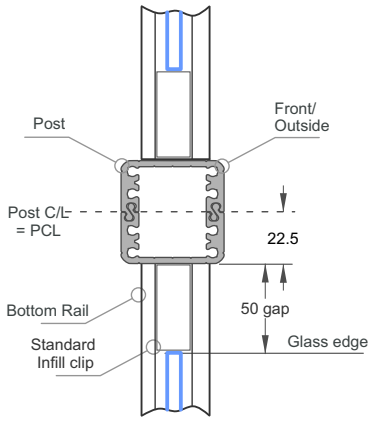

Viking post
JVB/007 shown
(or could be JVB/015)

5 - Cutting Guide

a - Hand Rail = Use maximum lengths
b - Post, Cut to
= HH -**A** -(10 or 12) = Post Height
c - Bottom Rail (x2), Cut to
= PCL- 2x22.5 = PCL - 45

d - 6mm Glass Height
= HH - **B** - (10 or 12) - 99x2 - (15+19)
= Glass Height
e - 6mm Glass Width
= PCL- 2x22.5 - 2x50 = Glass Width

Juralco Viking® Balustrade System - Offset Details

6mm Toughened Glass - Full Height. Handrail + Split Rails. Gutter Brkt Face Fix

1 - Refer Post Mounting type and installation Wind zone. Then choose Balustrade Height and max Post spacing.

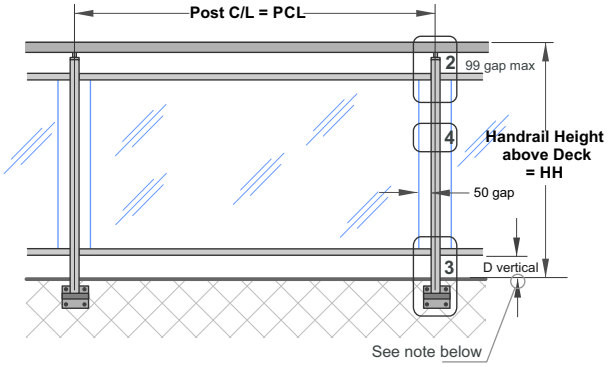

2 - Handrail - Offsets

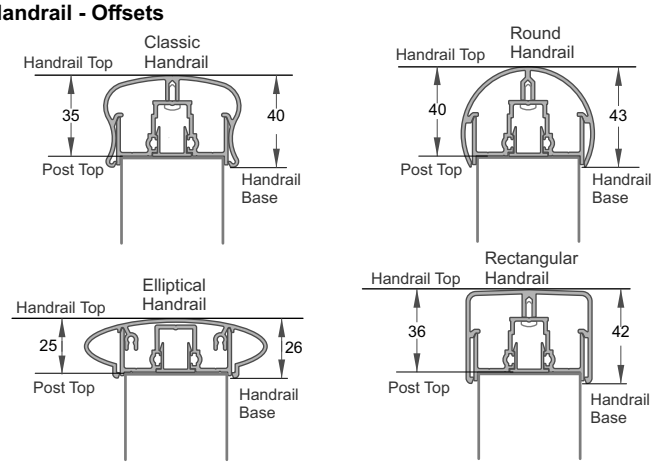

A
For Post Height.
Post Top to Handrail Top
25-40 Depending on chosen Handrail

B
For Top Gap Height
Handrail Base to Handrail Top
26-43 Depending on chosen Handrail

3 - Post Height offsets

Selected Handrail as above

Important Note:
All Glass Engagements 10mm min

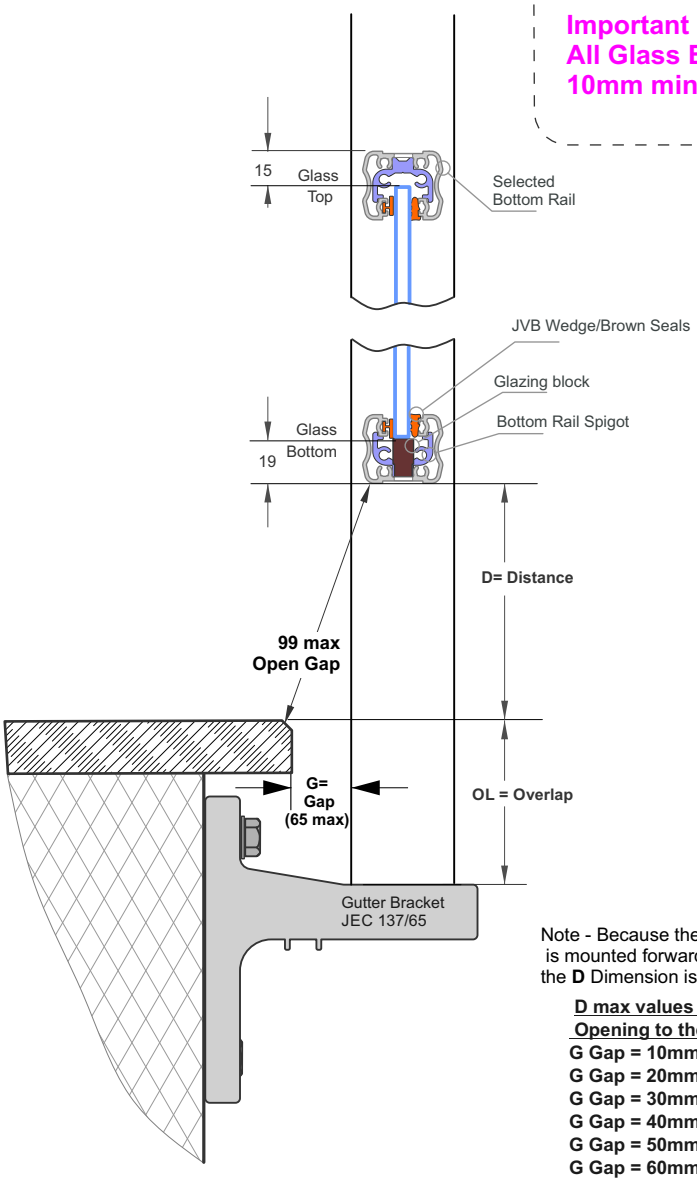

Note - Because the Bottom Rail is mounted forward of the Deck Edge the **D** Dimension is no longer 99mm.

D max values for a 99mm Opening to the deck

G Gap = 10mm D = 97mm
G Gap = 20mm D = 95mm
G Gap = 30mm D = 91mm
G Gap = 40mm D = 86mm
G Gap = 50mm D = 79mm
G Gap = 60mm D = 71mm
G Gap = 65mm max D = 66mm

4 - Width Offsets

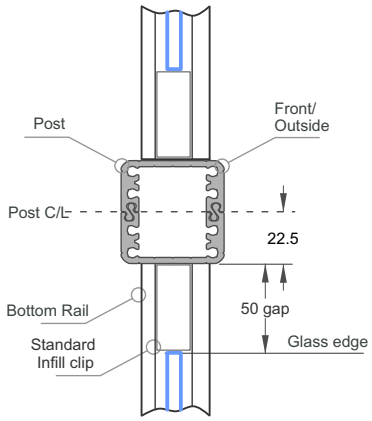

Viking post
JVB/007 shown
(or could be JVB/015)

5 - Cutting Guide

a - Hand Rail = Use maximum lengths
b - Post, Cut to
= HH - **A** + OL = Post Height
c - Bottom Rail (x2), Cut to
= PCL- 2x22.5 = PCL - 45

d - 6mm Glass Height
= HH - **B** - 99 - D - (15+19)
= Glass Height
e - 6mm Glass Width
= PCL-2x22.5 - 2x50 = Glass Width

Juralco Viking® Balustrade System - Offset Details

6mm Toughened Glass - Full Height. Handrail + Split Rails. Face Fix

1 - Refer Post Mounting type and installation Wind zone. Then choose Balustrade Height and max Post spacing.

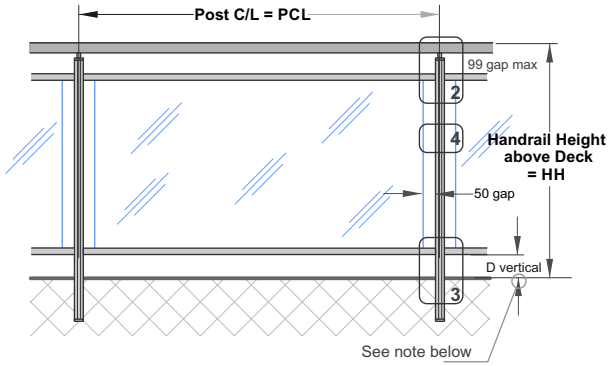

2 - Handrail - Offsets

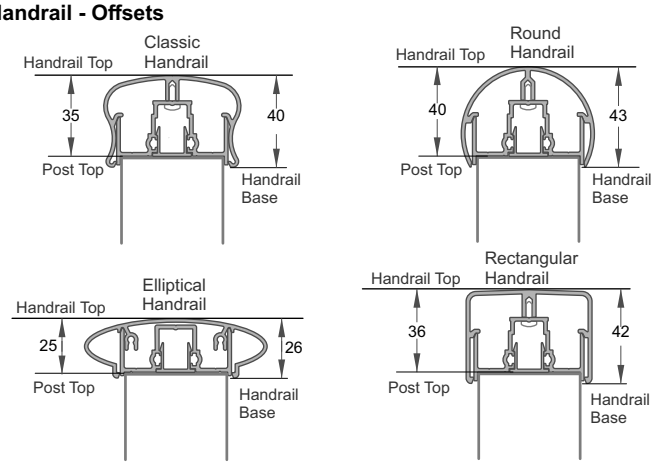

A
For Post Height.
Post Top to Handrail Top
25-40 Depending on chosen Handrail

B
For Top Gap Height
Handrail Base to Handrail Top
26-43 Depending on chosen Handrail

3 - Post Height offsets

Selected Handrail as above

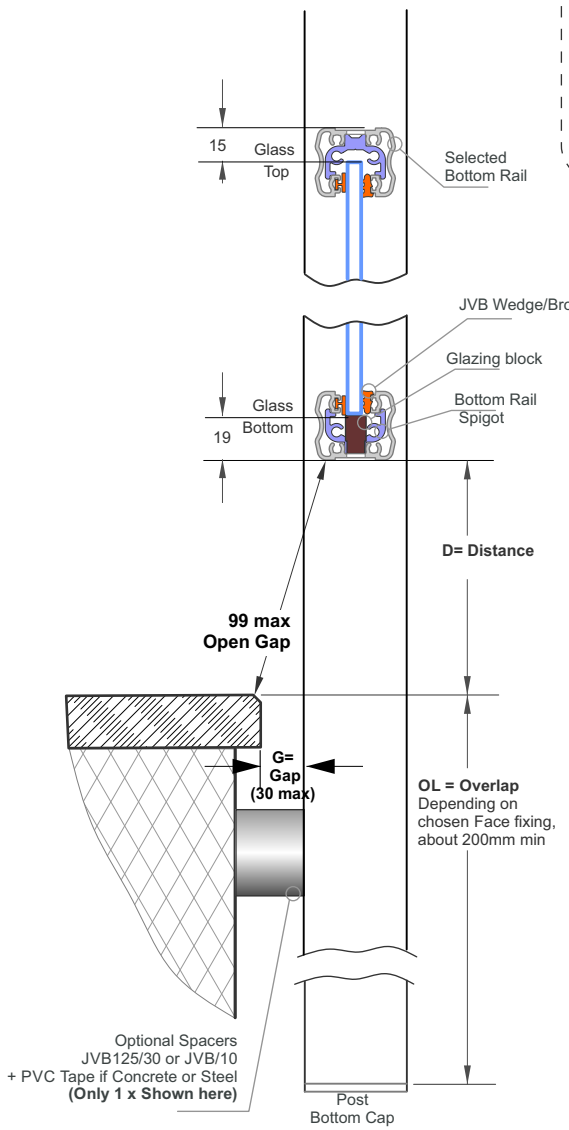

Important Note:
All Glass Engagements 10mm min

Note - Because the Bottom Rail is mounted forward of the Deck Edge the **D** Dimension is no longer 99mm.

D max values for a 99mm Opening to the deck
G Gap = 10mm D = 97mm
G Gap = 20mm D = 95mm
G Gap = 30mm max D = 91mm

4 - Width Offsets

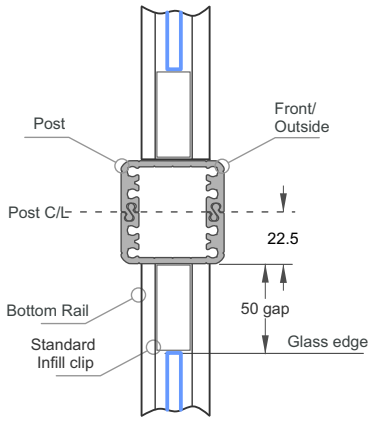

Viking post
JVB/007 shown
(or could be JVB/015)

5 - Cutting Guide

a - Hand Rail = Use maximum lengths
b - Post, Cut to
= HH -**A** + OL = Post Height
c - Bottom Rail (x2), Cut to
= PCL- 2x22.5 = PCL - 45

d - 6mm Glass H9eight
= HH - **B** -99 - D - (15+19)
= Glass Height
e - 6mm Glass Width
= PCL-2x22.5 - 2x50 = Glass Width

6mm Toughened Glass - Full Height. Handrail + Bottom Rail. Top Fix

1 - Refer Post Mounting type and installation Wind zone. Then choose Balustrade Height and max Post spacing.

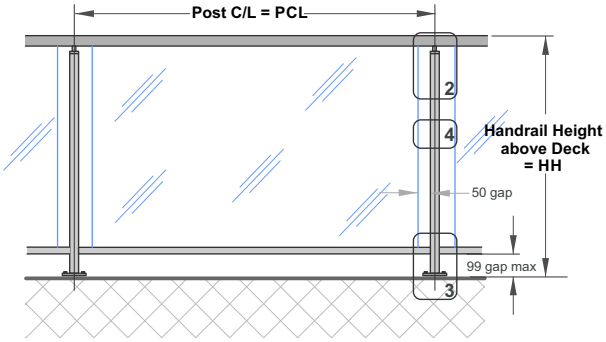

2 - Handrail - Offsets

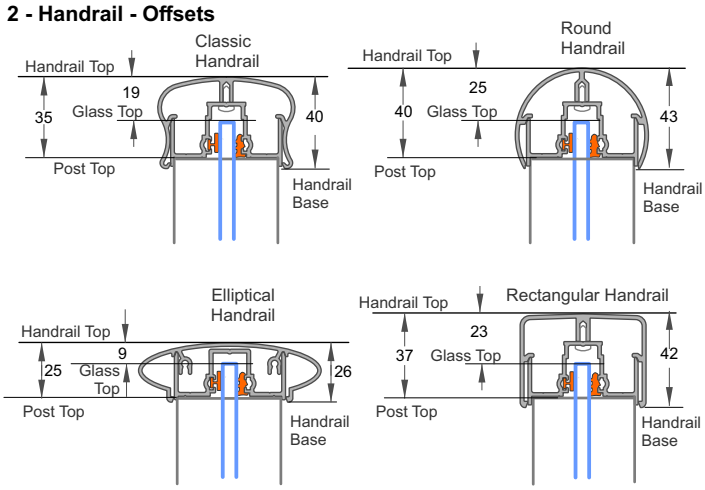

A
For Post Height.
Post Top to Handrail Top
25-40 Depending on chosen Handrail

B
For Glass Height
Glass Top to Handrail Top
9-25 Depending on chosen Handrail

Important Note: All Glass Engagements 10mm min

3 - Post Height offsets

Selected Handrail as above

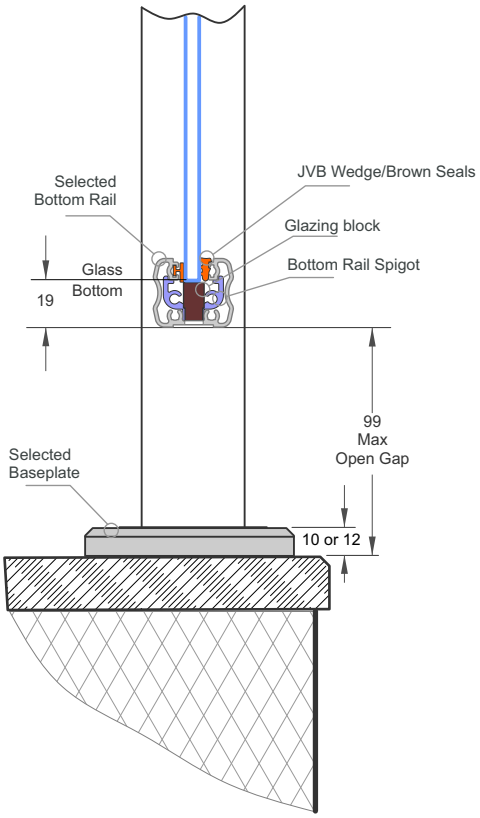

4 - Width Offsets

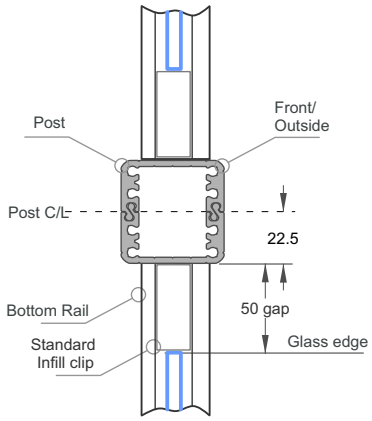

Viking post
JVB/007 shown
(or could be JVB/015)

5 - Cutting Guide

a - Hand Rail = Use maximum lengths
b - Post, Cut to
= HH -**A** - (10 or 12) = Post Height
c - Bottom Rail (x2), Cut to
= PCL- 2x22.5 = PCL - 45

d - 6mm Glass Height
= HH - **B** - 99 - (15+19)
= Glass Height
e - 6mm Glass Width
= PCL-2x22.5-2x50 = Glass Width

Juralco Viking® Balustrade System - Offset Details

6mm Toughened Glass- Full Height. Handrail + Bottom Rail. Gutter Brkt Face Fix

1 - Refer Post Mounting type and installation Wind zone. Then choose Balustrade Height and max Post spacing.

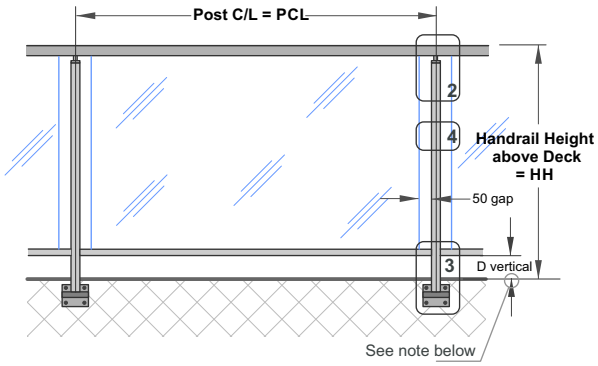

2 - Handrail - Offsets

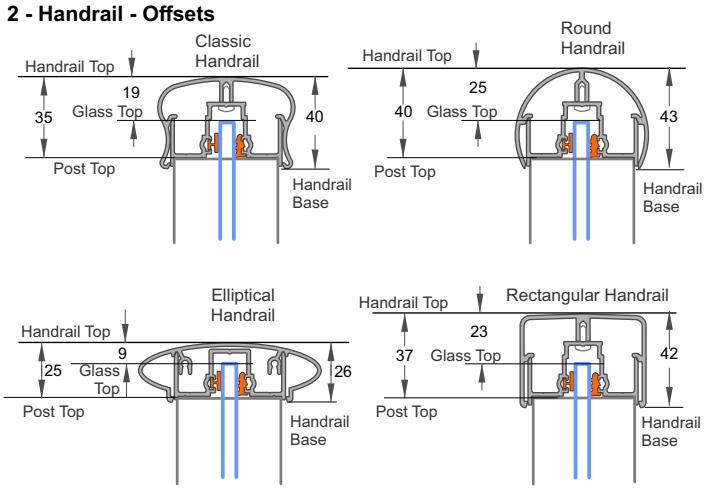

A
For Post Height.
Post Top to Handrail Top
25-40 Depending on chosen Handrail

B
For Glass Height
Glass Top to Handrail Top
9-25 Depending on chosen Handrail

Important Note: All Glass Engagements 10mm min

3 - Post Height offsets

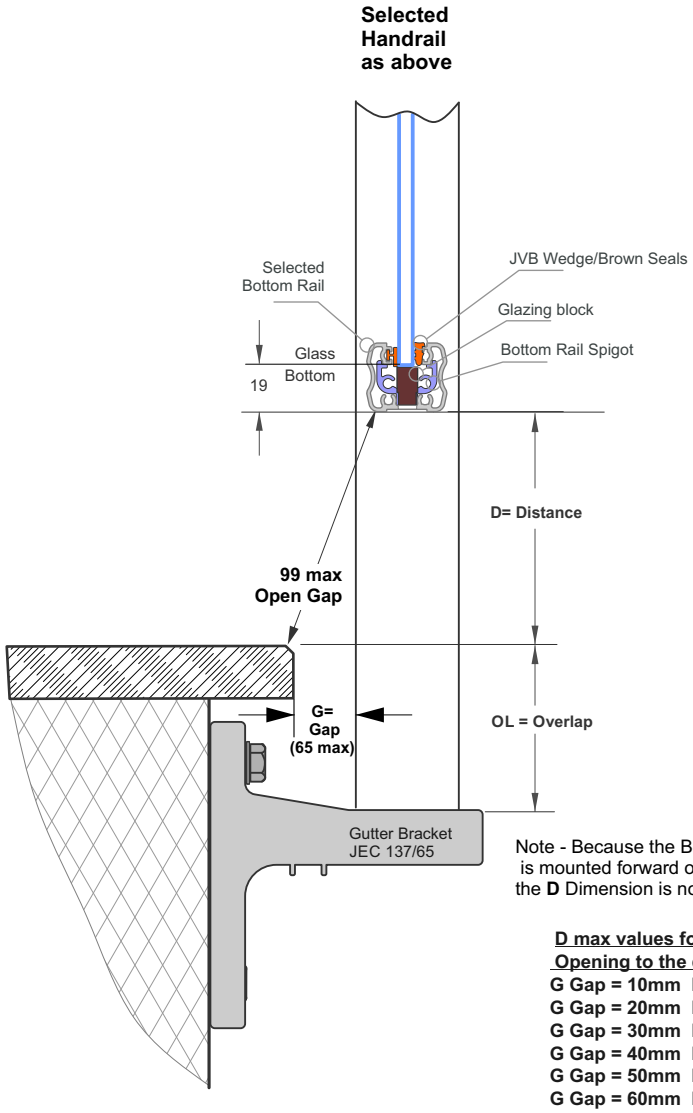

Note - Because the Bottom Rail is mounted forward of the Deck Edge the **D** Dimension is no longer 99mm.

D max values for a 99mm Opening to the deck

G Gap = 10mm D = 97mm
G Gap = 20mm D = 95mm
G Gap = 30mm D = 91mm
G Gap = 40mm D = 86mm
G Gap = 50mm D = 79mm
G Gap = 60mm D = 71mm
G Gap = 65mm max D = 66mm

4 - Width Offsets

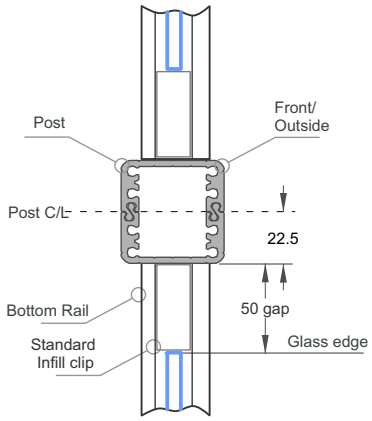

Viking post
JVB/007 shown
(or could be JVB/015)

5 - Cutting Guide

a - Hand Rail = Use maximum lengths
b - Post, Cut to
= HH - **A** +OL = Post Height
c - Bottom Rail (x2), Cut to
= PCL-2x22.5 = PCL - 45

d - 6mm Glass Height
= HH - **B** -D - 99 - (15+19)
= Glass Height
e - 6mm Glass Width
= PCL-2x22.5 - 2x50 = Glass Width

Juralco Viking® Balustrade System - Offset Details

6mm Toughened Glass - Full Height. Handrail + Bottom Rail. Face Fix

1 - Refer Post Mounting type and installation Wind zone. Then choose Balustrade Height and max Post spacing.

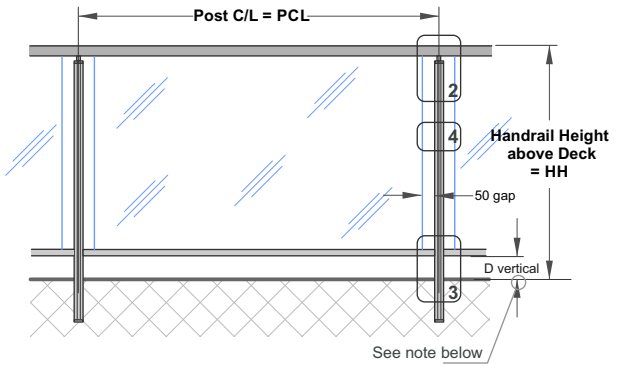

2 - Handrail - Offsets

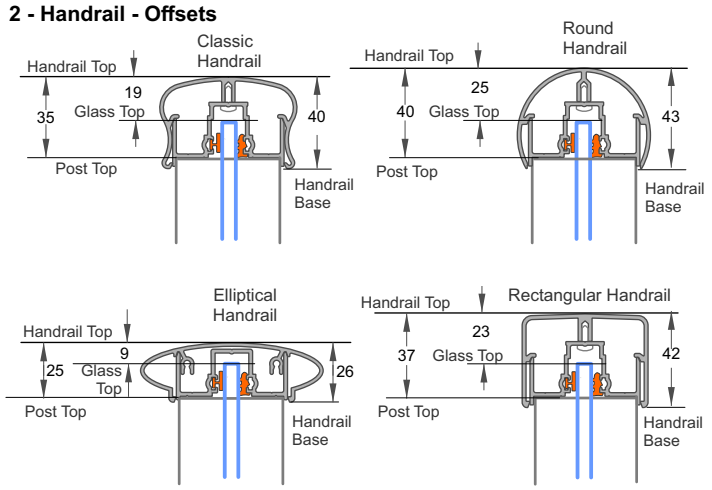

A
For Post Height.
Post Top to Handrail Top
25-40 Depending on chosen Handrail

B
For Glass Height
Glass Top to Handrail Top
9-25 Depending on chosen Handrail

Important Note: All Glass Engagements 10mm min

3 - Post Height offsets

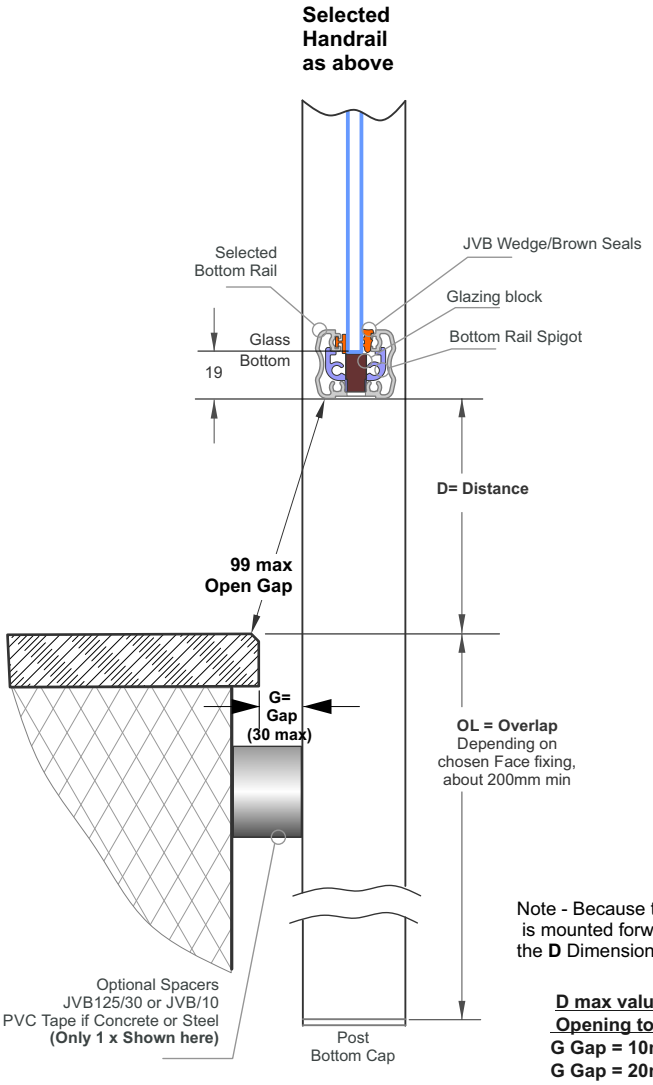

Note - Because the Bottom Rail is mounted forward of the Deck Edge the **D** Dimension is no longer 99mm.

D max values for a 99mm Opening to the deck
G Gap = 10mm D = 97mm
G Gap = 20mm D = 95mm
G Gap = 30mm max D = 91mm

4 - Width Offsets

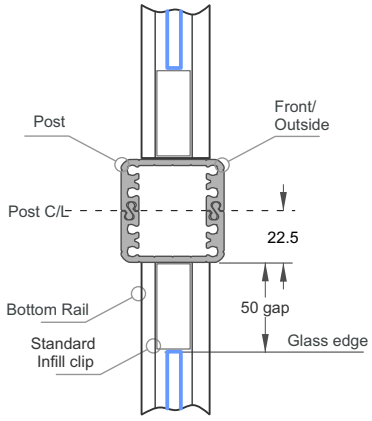

Viking post
JVB/007 shown
(or could be JVB/015)

5 - Cutting Guide

a - Hand Rail = Use maximum lengths
b - Post, Cut to
= HH -**A** + OL = Post Height
c - Bottom Rail (x2), Cut to
= PCL-2x22.5 = PCL - 45

d - 6mm Glass Height
= HH - **B** - 99 - D - (15+19)
= Glass Height
e - 6mm Glass Width
= PCL-2x22.5-2x50 = Glass Width

Juralco Viking® Balustrade System - Offset Details

10mm Toughened Glass - Semi Frameless + Handrail. Top Fix

1 - Refer Post Mounting type and installation Wind zone. Then choose Balustrade Height and max Post spacing.

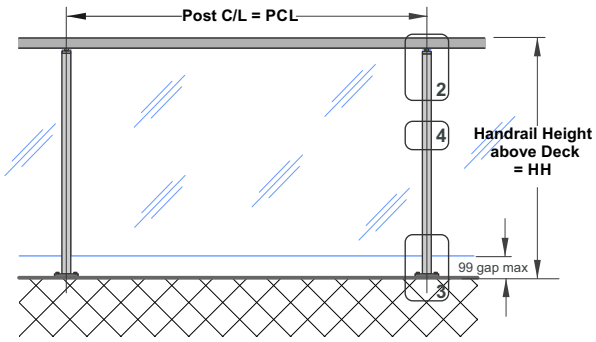

A Corner Post is available for 10mm Glass, Inline - Semi Frameless. Top Mount only with 110mm sq JEC 222 Baseplate

2 - Handrail - Offsets

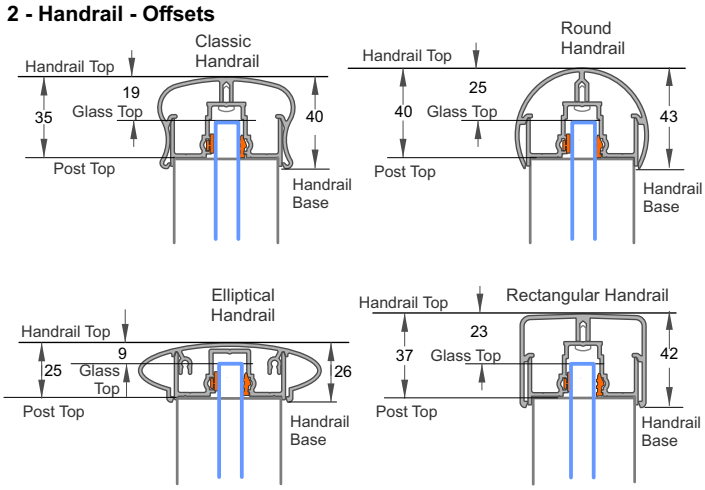

A
For Post Height.
Post Top to Handrail Top
25-40 Depending on chosen Handrail

B
For Glass Height
Glass Top to Handrail Top
9-25 Depending on chosen Handrail

Important Note: All Glass Engagements 10mm min

3 - Post Height offsets

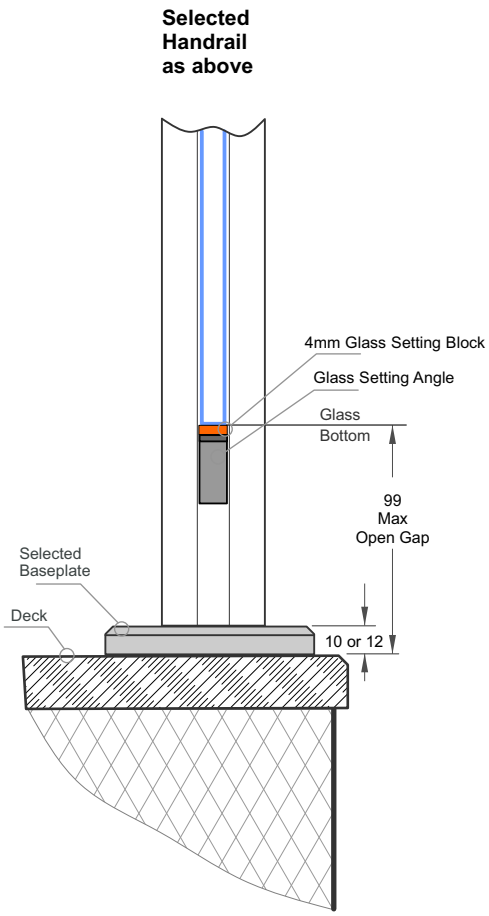

4 - Width Offsets

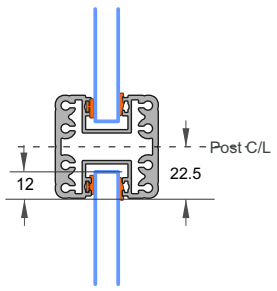

Viking post
JVB/011

5 - Cutting Guide

a - Hand Rail = Use maximum lengths
b - Post, Cut to
= HH - **A** - (10 or 12) = Post Height

c - 10mm Glass Height
= HH - **B** - 99
d - 10mm Glass Width
= PCL- 2x10 = Glass Width

Juralco Viking® Balustrade System - Offset Details

10mm Toughened Glass - Semi Frameless + Handrail. Gutter Brkt Face Fix

1 - Refer Post Mounting type and installation Wind zone. Then choose Balustrade Height and max Post spacing.

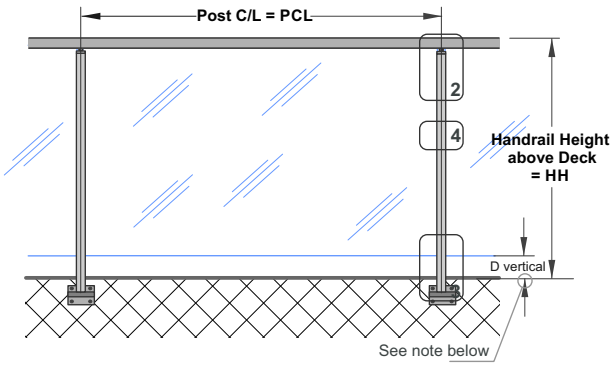

2 - Handrail - Offsets

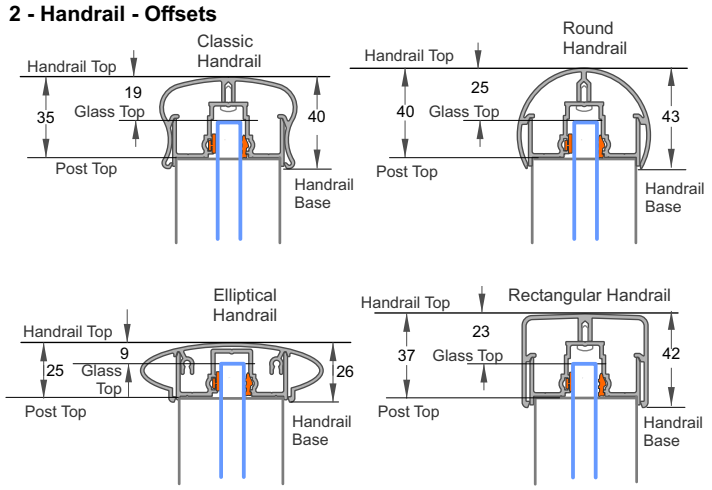

A
For Post Height.
Post Top to Handrail Top
25-40 Depending on chosen Handrail

B
For Glass Height
Glass Top to Handrail Top
9-25 Depending on chosen Handrail

Important Note: All Glass Engagements 10mm min

3 - Post Height offsets

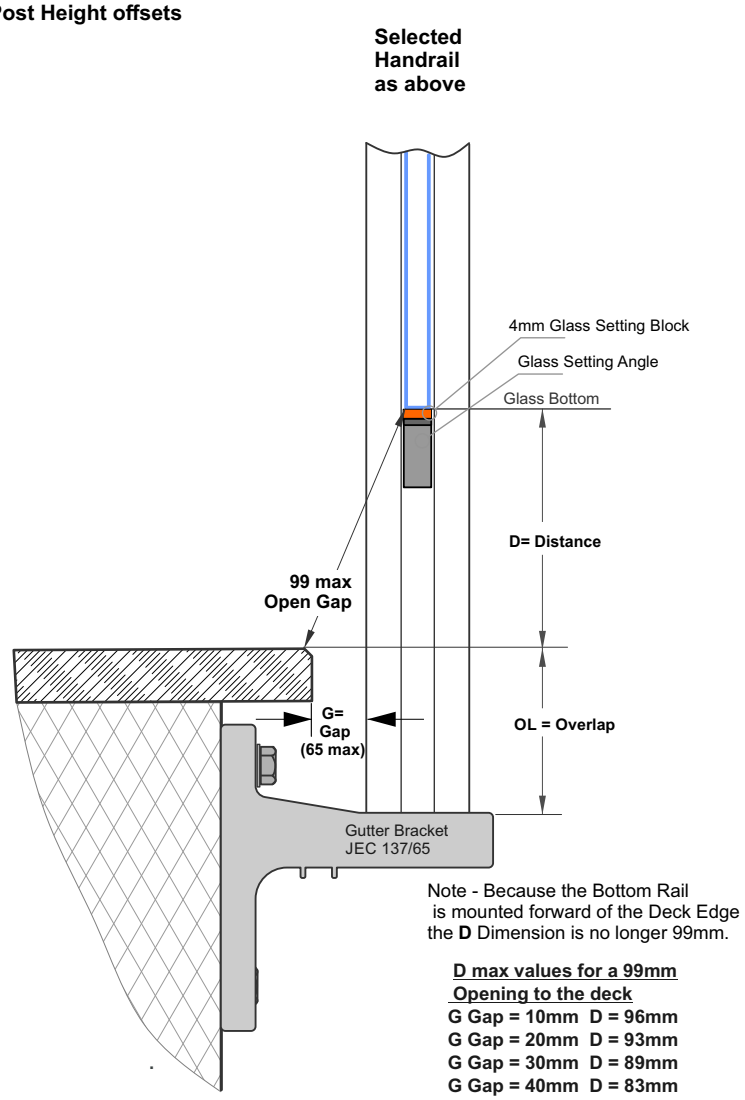

Note - Because the Bottom Rail is mounted forward of the Deck Edge the **D** Dimension is no longer 99mm.

D max values for a 99mm Opening to the deck

G Gap = 10mm D = 96mm
G Gap = 20mm D = 93mm
G Gap = 30mm D = 89mm
G Gap = 40mm D = 83mm
G Gap = 50mm D = 76mm
G Gap = 60mm D = 66mm
G Gap = 65mm max D = 60mm

4 - Width Offsets

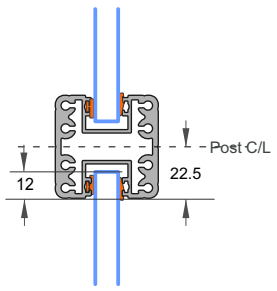

Viking post
JVB/011

5 - Cutting Guide

a - Hand Rail = Use maximum lengths
b - Post, Cut to
= HH - **A** + OL = Post Height

c - 10mm Glass Height
= HH - **B** - D
= Glass Height
d - 10mm Glass Width
= PCL- 2x10 = Glass Width

Juralco Viking® Balustrade System - Offset Details

10mm Toughened Glass - Semi Frameless + Handrail. Face Fix

1 - Refer Post Mounting type and installation Wind zone. Then choose Balustrade Height and max Post spacing.

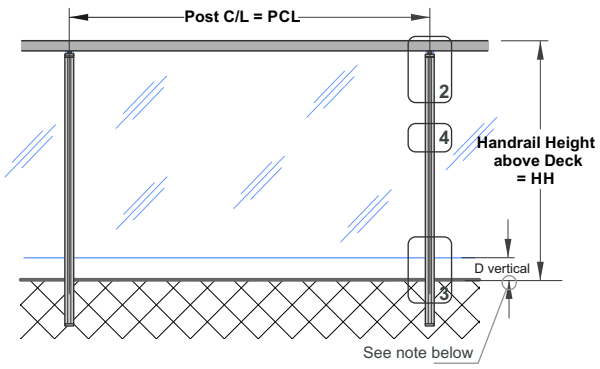

2 - Handrail - Offsets

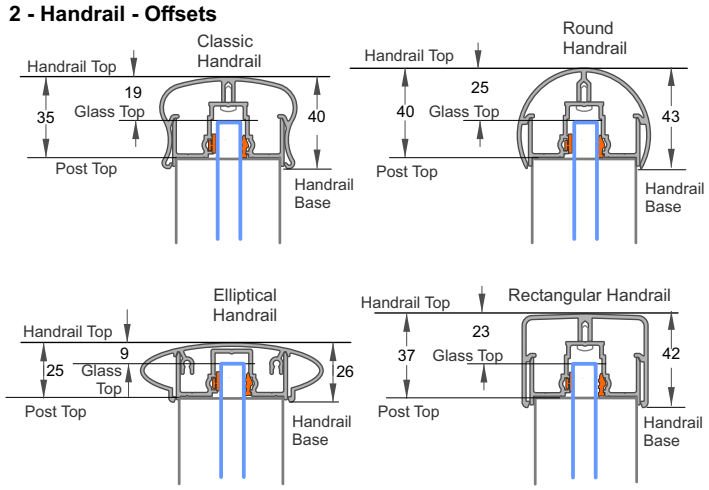

A
For Post Height.
Post Top to Handrail Top
25-40 Depending on chosen Handrail

B
For Glass Height
Glass Top to Handrail Top
9-25 Depending on chosen Handrail

Important Note: All Glass Engagements 10mm min

3 - Post Height offsets

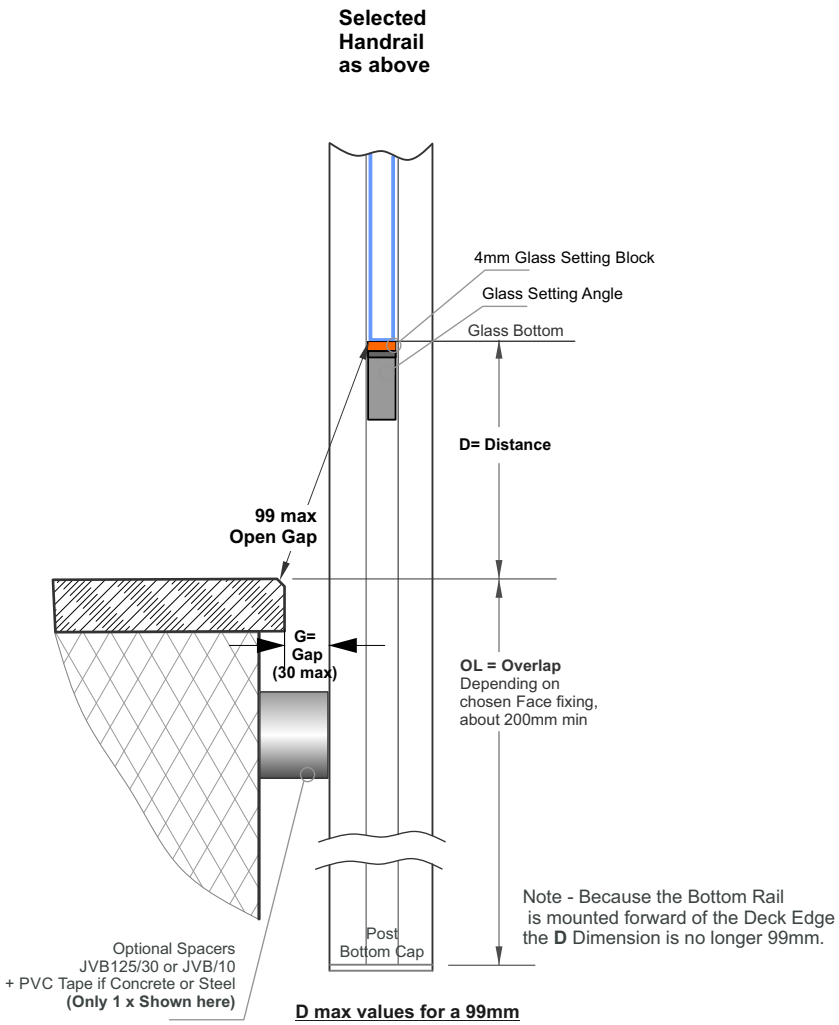

Note - Because the Bottom Rail is mounted forward of the Deck Edge the **D** Dimension is no longer 99mm.

D max values for a 99mm Opening to the deck
G Gap = 10mm D = 96mm
G Gap = 20mm D = 93mm
G Gap = 30mm max D = 89mm

4 - Width Offsets

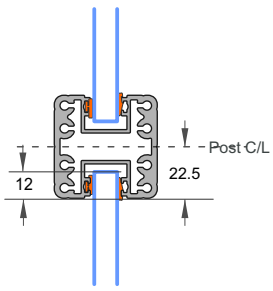

Viking post
JVB/011

5 - Cutting Guide

a - Hand Rail = Use maximum lengths
b - Post, Cut to
= HH - **A** + OL = Post Height

c - 10mm Glass Height
= HH - **B** - D
= Glass Height
d - 10mm Glass Width
= PCL- 2x10 = Glass Width

10mm Toughened Glass - Semi Frameless + JEC 29 Bracket mounted on Post + Handrail. Top Fix

1 - Refer Post Mounting type and installation Wind zone. Then choose Balustrade Height and max Post spacing.

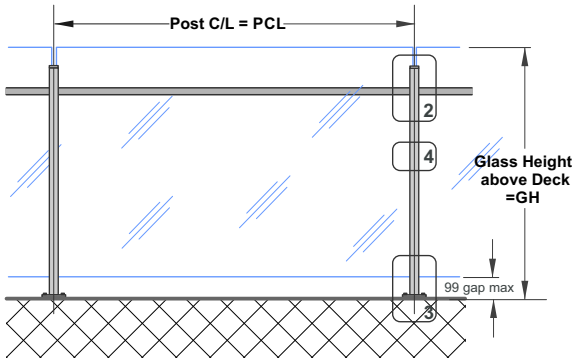

A Corner Post is not suitable available for this configuration

2 - Glass Top - Offsets

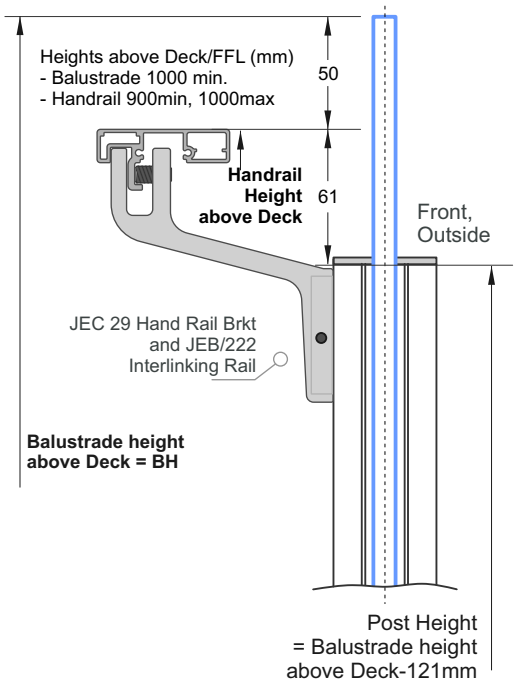

Important Note: All Glass Engagements 10mm min

3 - Post Height offsets

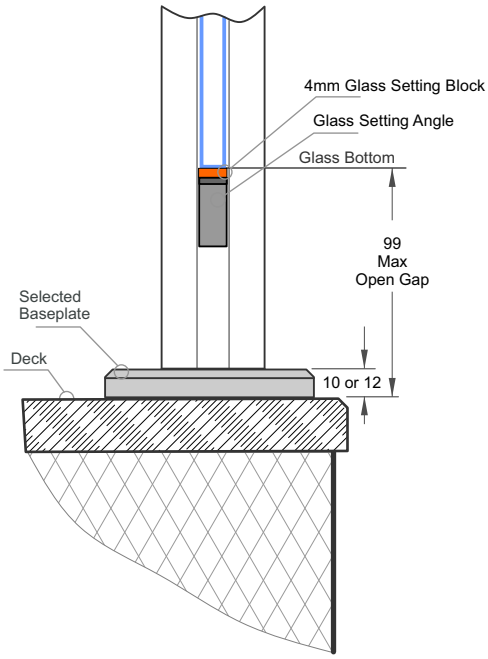

4 - Width Offsets

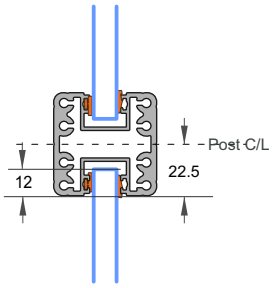

Viking post JVB/011

5 - Cutting Guide

a - Hand Rail = Use maximum lengths
b - Post, Cut to
= BH - 121 - (10 or 12) = Post Height

c - 10mm Glass Height
= BH - 99
= Glass Height
d - 10mm Glass Width
= PCL- 2x10 = Glass Width

Juralco Viking® Balustrade System - Offset Details

10mm Toughened Glass - Semi Frameless + JEC 29 Bracket mounted on Post + Handrail. Gutter Brkt Face Fix

1 - Refer Post Mounting type and installation Wind zone. Then choose Balustrade Height and max Post spacing.

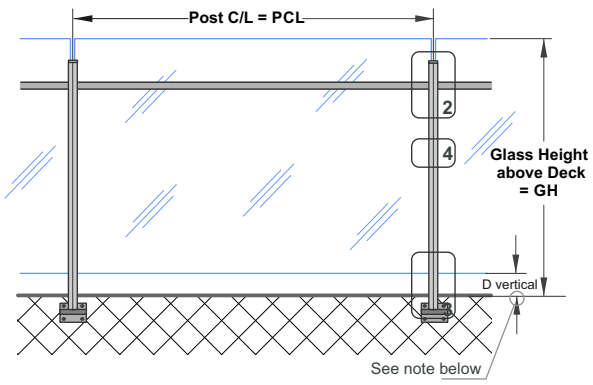

2 - Glass Top - Offsets

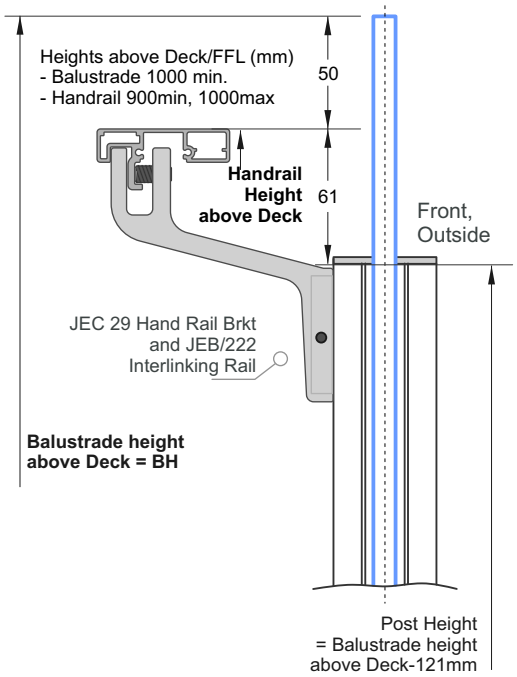

Important Note: All Glass Engagements 10mm min

3 - Post Height offsets

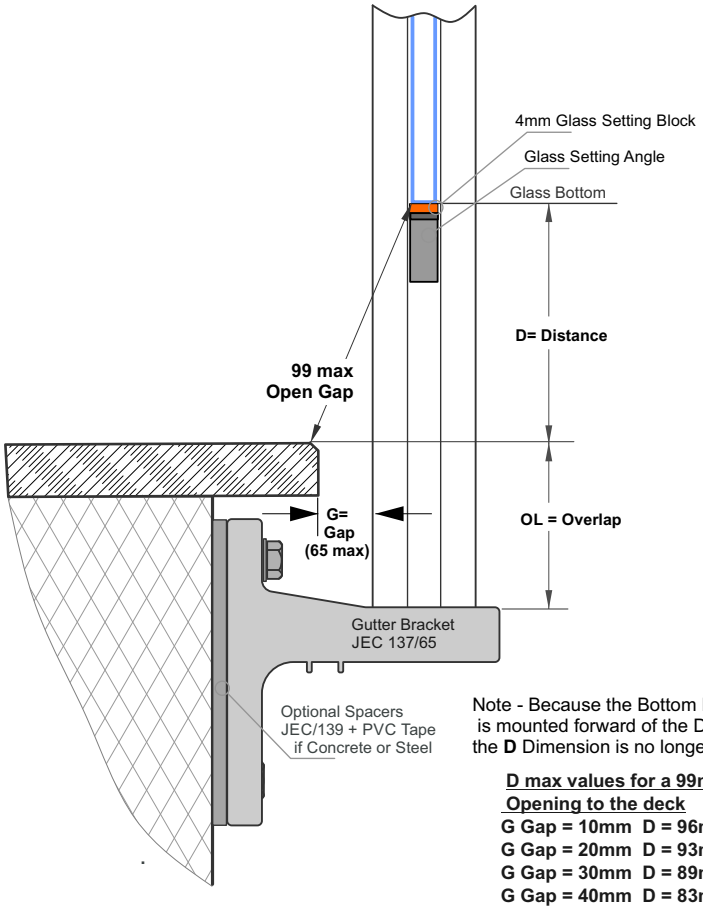

Note - Because the Bottom Rail is mounted forward of the Deck Edge the **D** Dimension is no longer 99mm.

D max values for a 99mm Opening to the deck

G Gap = 10mm D = 96mm
G Gap = 20mm D = 93mm
G Gap = 30mm D = 89mm
G Gap = 40mm D = 83mm
G Gap = 50mm D = 76mm
G Gap = 60mm D = 66mm
G Gap = 65mm max D = 60mm

4 - Width Offsets

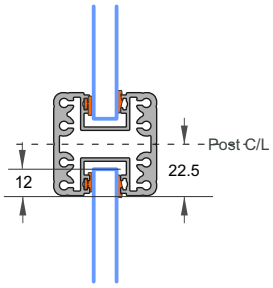

Viking post
JVB/011

5 - Cutting Guide

a - Hand Rail = Use maximum lengths
b - Post, Cut to
= BH - 121 + OL = Post Height

c - 10mm Glass Height
= BH - D
= Glass Height
d - 10mm Glass Width
= PCL- 2x10 = Glass Width

Juralco Viking® Balustrade System - Offset Details

10mm Toughened Glass - Semi Frameless + JEC 29 Bracket mounted on Post + Handrail. Face Fix

1 - Refer Post Mounting type and installation Wind zone. Then choose Balustrade Height and max Post spacing.

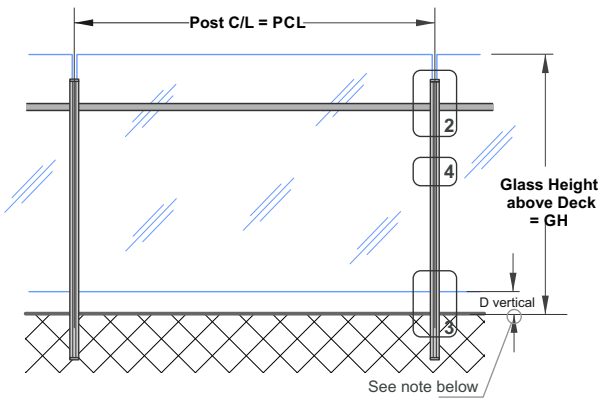

2 - Glass Top - Offsets

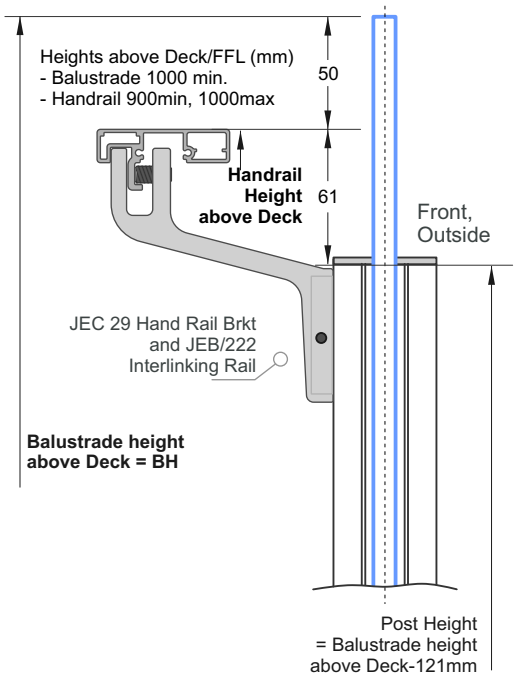

Important Note: All Glass Engagements 10mm min

3 - Post Height offsets

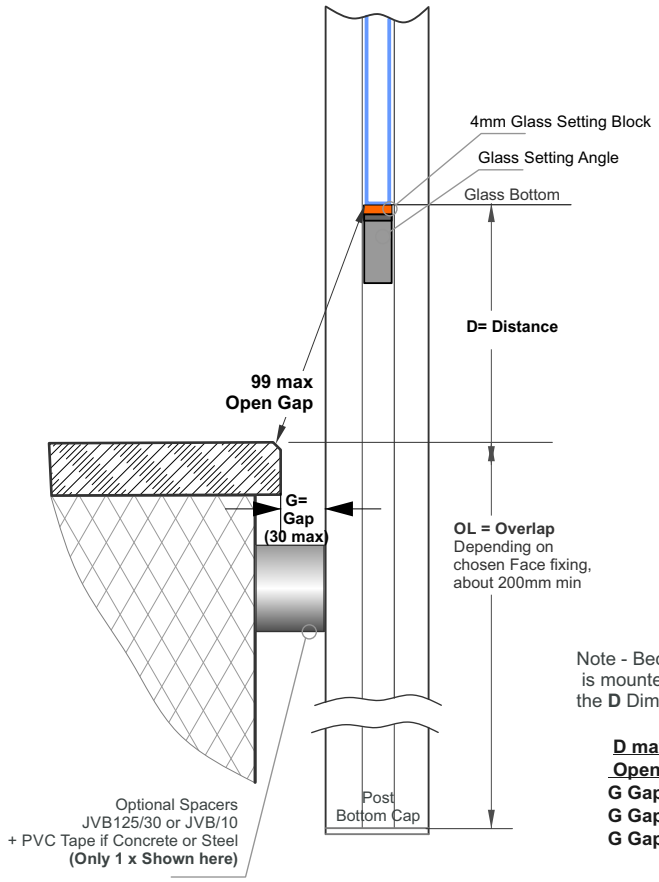

Note - Because the Bottom Rail is mounted forward of the Deck Edge the **D** Dimension is no longer 99mm.

D max values for a 99mm Opening to the deck
G Gap = 10mm D = 96mm
G Gap = 20mm D = 93mm
G Gap = 30mm max D = 89mm

4 - Width Offsets

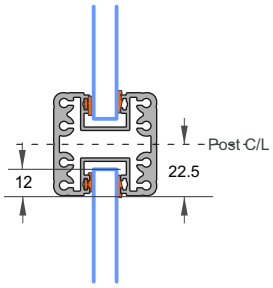

Viking post
JVB/011

5 - Cutting Guide

a - Hand Rail = Use maximum lengths
b - Post, Cut to
= BH - 121 + OL = Post Height

c - 10mm Glass Height
= BH - D
= Glass Height
d - 10mm Glass Width
= PCL- 2x10 = Glass Width

Juralco Viking® Balustrade System - Offset Details

17mm Baluster - Split Rail. Handrail + Top and Bottom Rail. Top Fix

1 - Refer Post Mounting type and installation Wind zone. Then choose Balustrade Height and max Post spacing.

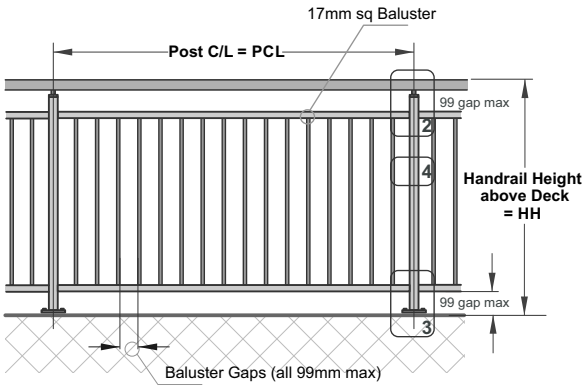

2 - Handrail - Offsets

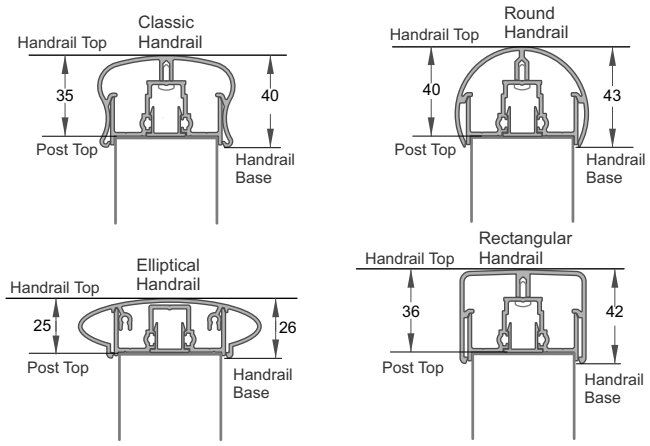

A
For Post Height.
Post Top to Handrail Top
25-40 Depending on
chosen Handrail

B
For Top Gap Height
Handrail Base to Handrail Top
26-43 Depending on
chosen Handrail

3 - Post Height offsets

Selected Handrail as above

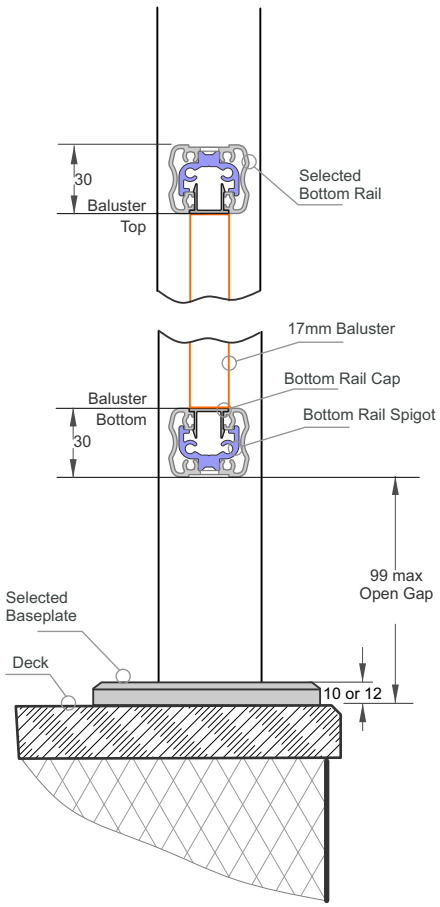

4 - Width Offsets

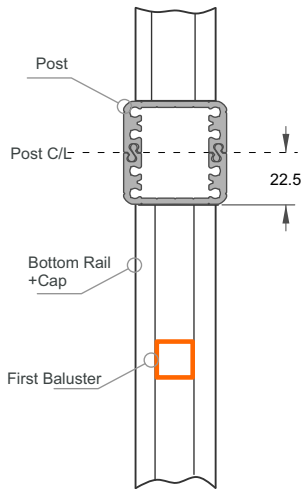

Viking post
JVB/007 shown
(or could be JVB/015)

5 - Cutting Guide

a - Hand Rail = Use maximum lengths
b - Post, Cut to
= HH - **A** - (10 or 12) = Post Height
c - Bottom Rail (x2), Cut to
= PCL- 2x22.5 = PCL - 45

d - 17mm Balustrade Height
= HH - **B** - 2x99 - 2x30

Juralco Viking® Balustrade System - Offset Details

17mm Baluster - Split Rail. Handrail + Top and Bottom Rail. Gutter Brkt Face Fix

1 - Refer Post Mounting type and installation Wind zone. Then choose Balustrade Height and max Post spacing.

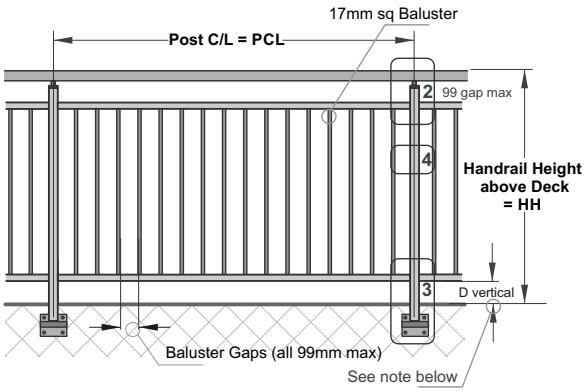

2 - Handrail - Offsets

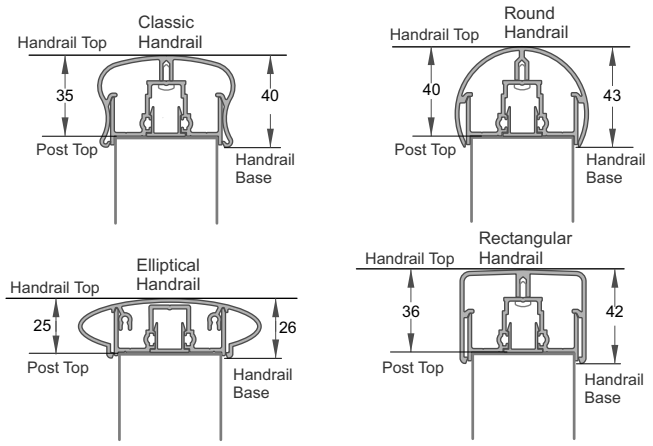

A
For Post Height.
Post Top to Handrail Top
25-40 Depending on chosen Handrail

B
For Top Gap Height
Handrail Base to Handrail Top
26-43 Depending on chosen Handrail

3 - Post Height offsets

Selected Handrail as above

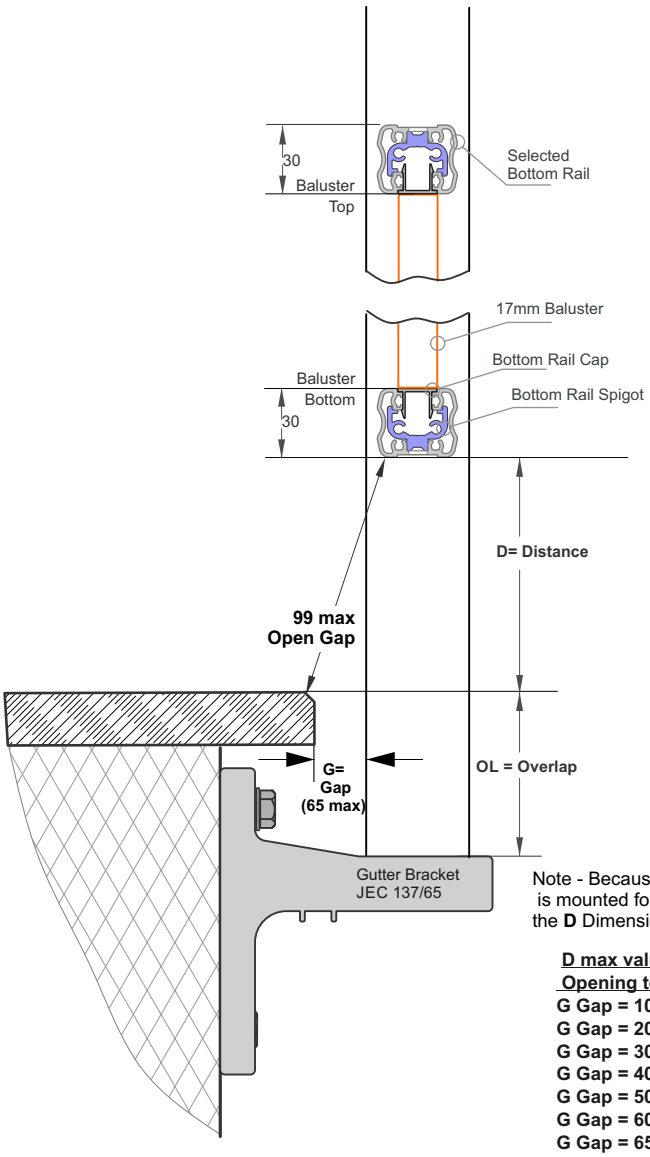

Note - Because the Bottom Rail is mounted forward of the Deck Edge the **D** Dimension is no longer 99mm.

D max values for a 99mm Opening to the deck

G Gap = 10mm D = 97mm
G Gap = 20mm D = 95mm
G Gap = 30mm D = 91mm
G Gap = 40mm D = 86mm
G Gap = 50mm D = 79mm
G Gap = 60mm D = 71mm
G Gap = 65mm max D = 66mm

4 - Width Offsets

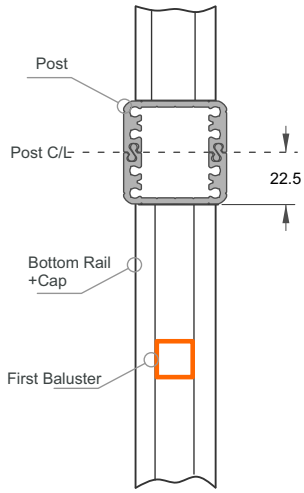

Viking post
JVB/007 shown
(or could be JVB/015)

5 - Cutting Guide

a - Hand Rail = Use maximum lengths
b - Post, Cut to
= HH - **A** + OL = Post Height
c - Bottom Rail (x2), Cut to
= PCL- 2x22.5 = PCL - 45

d - 17mm Balustrade Height
= HH - **B** - 99 - D - 2x30

Juralco Viking® Balustrade System - Offset Details

17mm Baluster - Split Rail. Handrail + Top and Bottom Rail. Face Fix

1 - Refer Post Mounting type and installation Wind zone. Then choose Balustrade Height and max Post spacing.

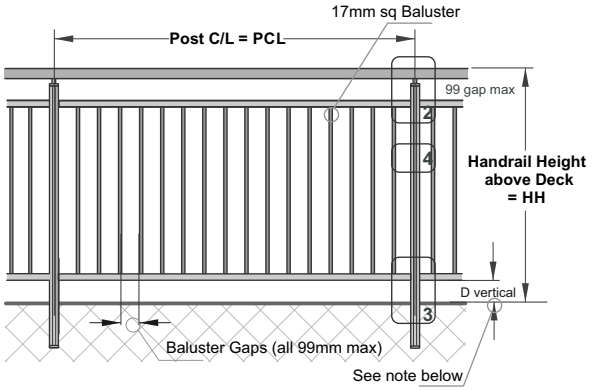

2 - Handrail - Offsets

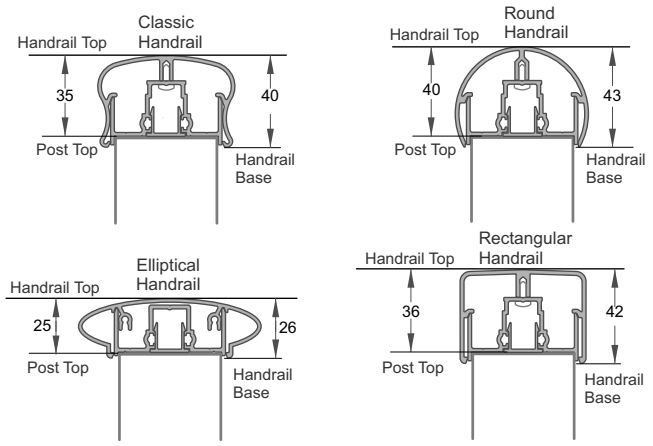

A
For Post Height.
Post Top to Handrail Top
25-40 Depending on chosen Handrail

B
For Top Gap Height
Handrail Base to Handrail Top
26-43 Depending on chosen Handrail

3 - Post Height offsets

Selected Handrail as above

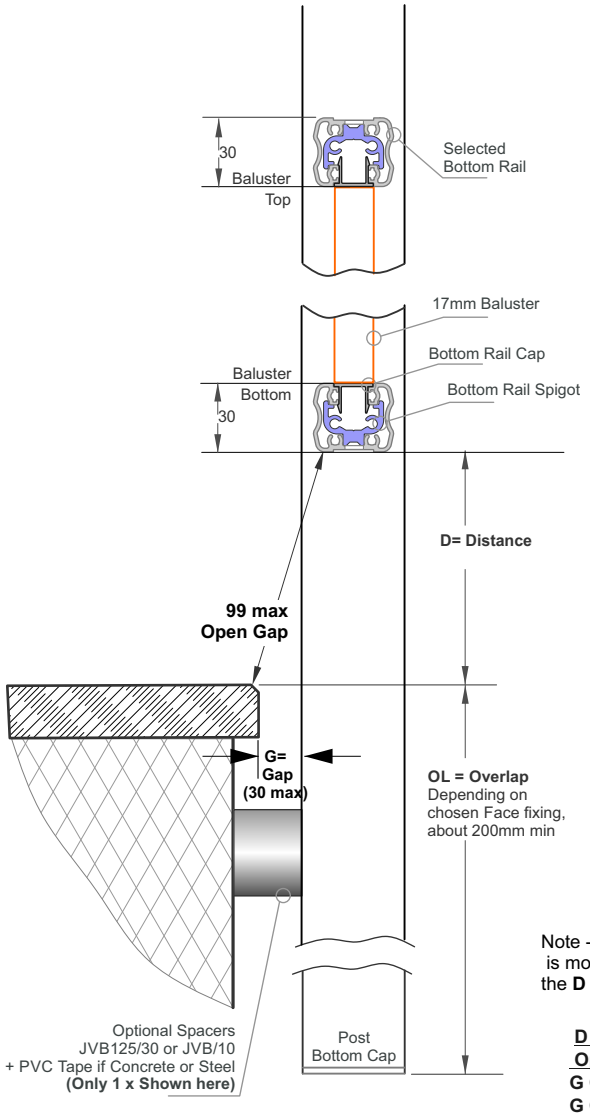

Note - Because the Bottom Rail is mounted forward of the Deck Edge the **D** Dimension is no longer 99mm.

D max values for a 99mm Opening to the deck
G Gap = 10mm D = 97mm
G Gap = 20mm D = 95mm
G Gap = 30mm max D = 91mm

4 - Width Offsets

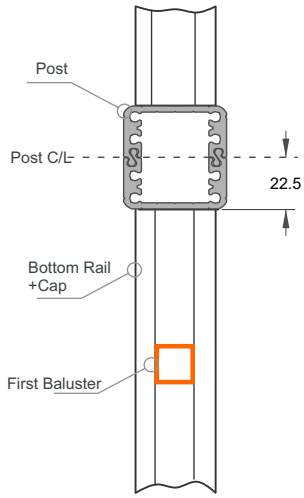

Viking post
JVB/007 shown
(or could be JVB/015)

5 - Cutting Guide

a - Hand Rail = Use maximum lengths
b - Post, Cut to
= HH - **A** + OL = Post Height
c - Bottom Rail (x2), Cut to
= PCL- 2x22.5 = PCL - 45

d - 17mm Balustrade Height
= HH - **B** - 99 - D - 2x30

Juralco Viking® Balustrade System - Offset Details

17mm Baluster - Full Height. Handrail + Bottom Rail. Top Fix

1 - Refer Post Mounting type and installation Wind zone. Then choose Balustrade Height and max Post spacing.

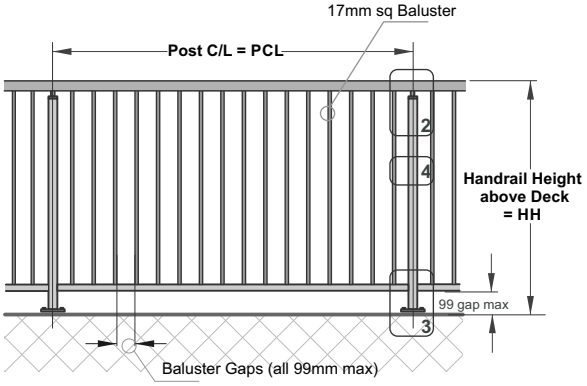

2 - Handrail - Offsets

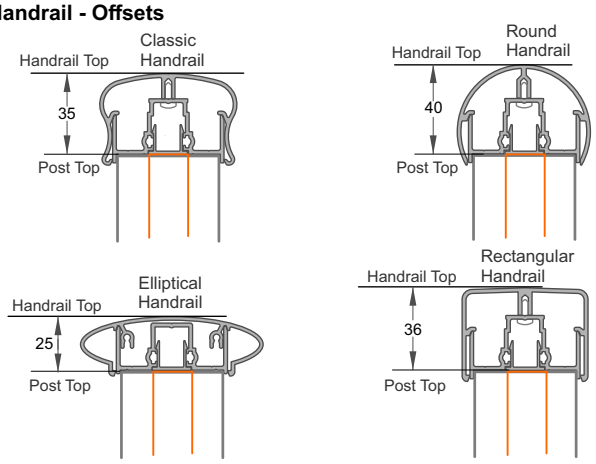

A

For Post and Baluster Top Height. Post Top to Handrail Top 25-40 Depending on chosen Handrail

3 - Post Height offsets

Selected Handrail as above

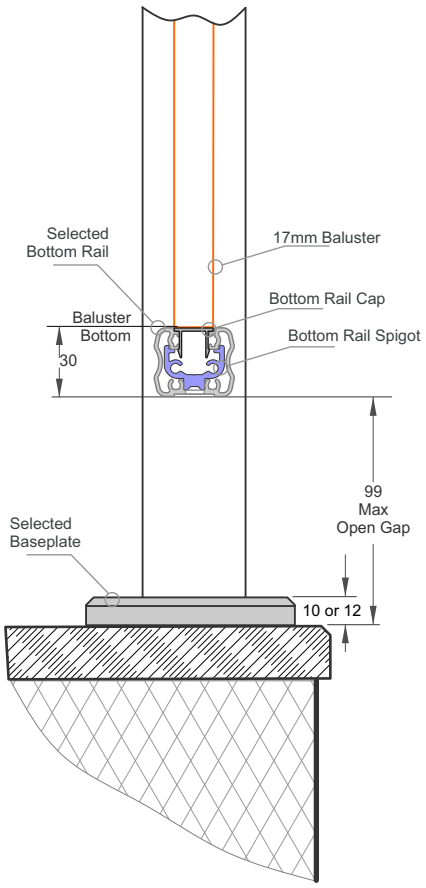

4 - Width Offsets

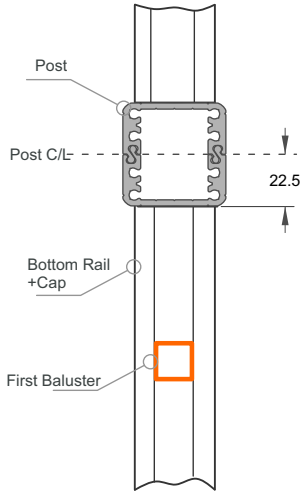

Viking post
JVB/007 shown
(or could be JVB/015)

5 - Cutting Guide

a - Hand Rail = Use maximum lengths

b - Post, Cut to

= HH - **A** -(10 or 12) = Post Height

c - Bottom Rail (x2), Cut to

= PCL- 2x22.5 = PCL - 45

d - 17mm Balustrade Height

= HH - **A** - 99 - 30

Juralco Viking® Balustrade System - Offset Details

17mm Baluster - Full Height. Handrail + Bottom Rail. Gutter Brkt Face Fix

1 - Refer Post Mounting type and installation Wind zone. Then choose Balustrade Height and max Post spacing.

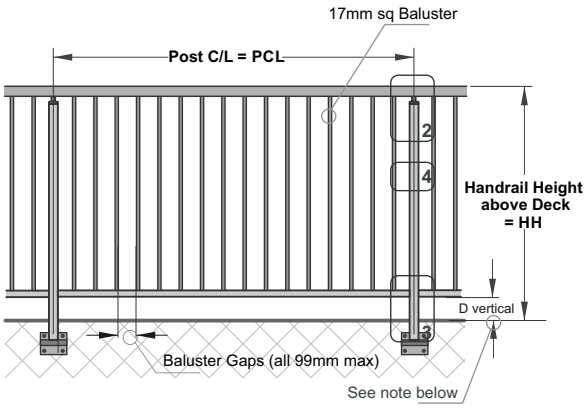

2 - Handrail - Offsets

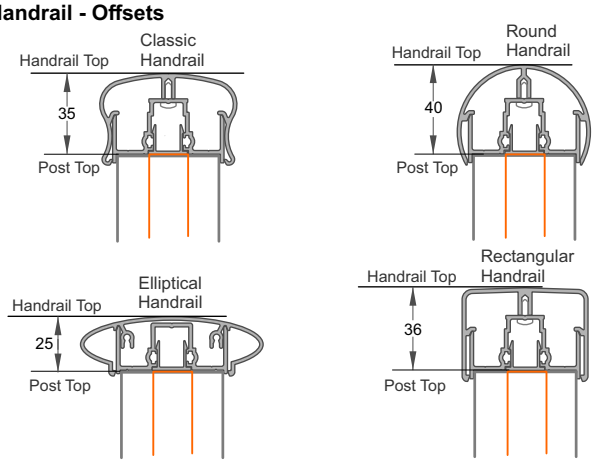

A

For Post and Baluster Top Height. Post Top to Handrail Top 25-40 Depending on chosen Handrail

3 - Post Height offsets

Selected Handrail as above

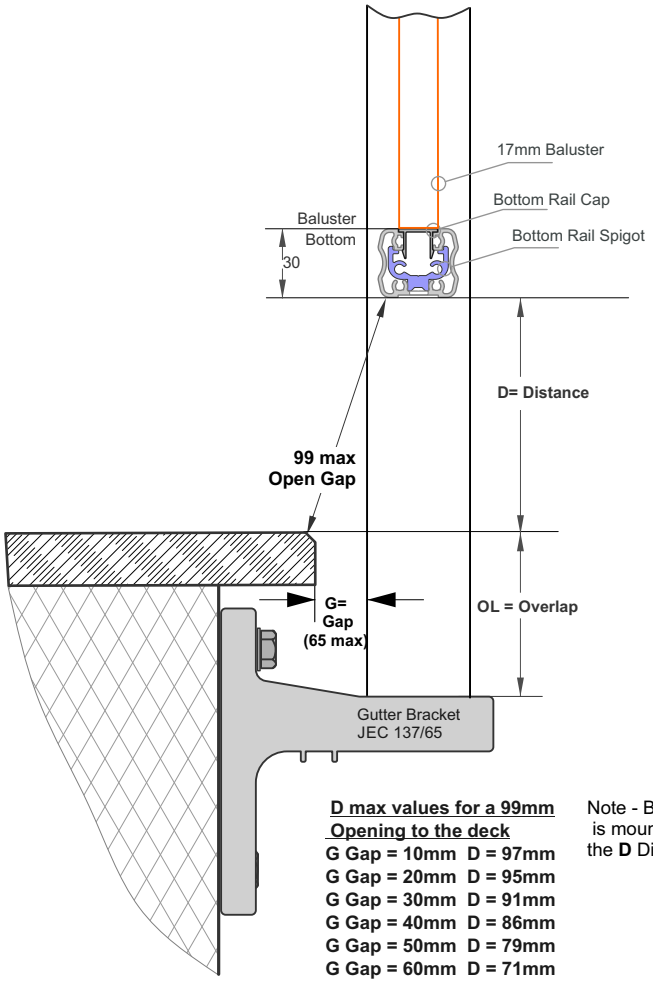

D max values for a 99mm Opening to the deck

G Gap = 10mm D = 97mm
G Gap = 20mm D = 95mm
G Gap = 30mm D = 91mm
G Gap = 40mm D = 86mm
G Gap = 50mm D = 79mm
G Gap = 60mm D = 71mm
G Gap = 65mm max D = 66mm

Note - Because the Bottom Rail is mounted forward of the Deck Edge the **D** Dimension is no longer 99mm.

4 - Width Offsets

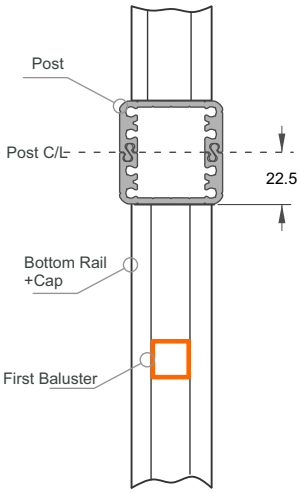

Viking post
JVB/007 shown
(or could be JVB/015)

5 - Cutting Guide

a - Hand Rail = Use maximum lengths
b - Post, Cut to
= HH - **A** + OL = Post Height
c - Bottom Rails (x2), Cut to
= PCL- 2x22.5 = PCL - 45

d - 17mm Balustrade Height
= HH - **A** - 99 - 30

Juralco Viking® Balustrade System - Offset Details

17mm Baluster - Full Height. Handrail + Bottom Rail. Face Fix

1 - Refer Post Mounting type and installation Wind zone. Then choose Balustrade Height and max Post spacing.

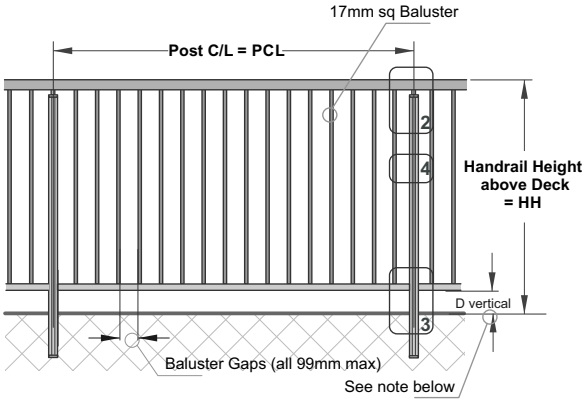

2 - Handrail - Offsets

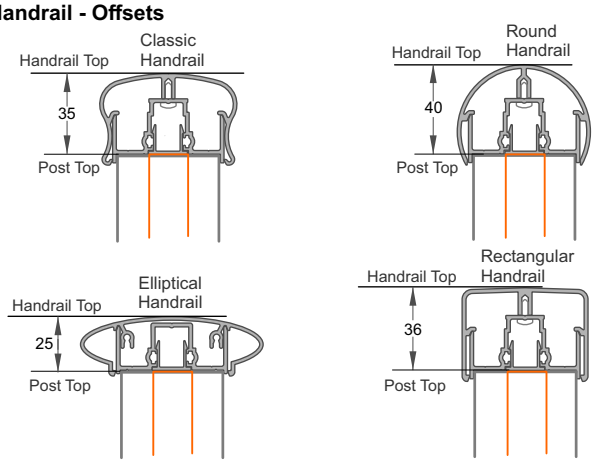

A

For Post and Baluster Top Height.
Post Top to Handrail Top
25-40 Depending on
chosen Handrail

3 - Post Height offsets

Selected Handrail as above

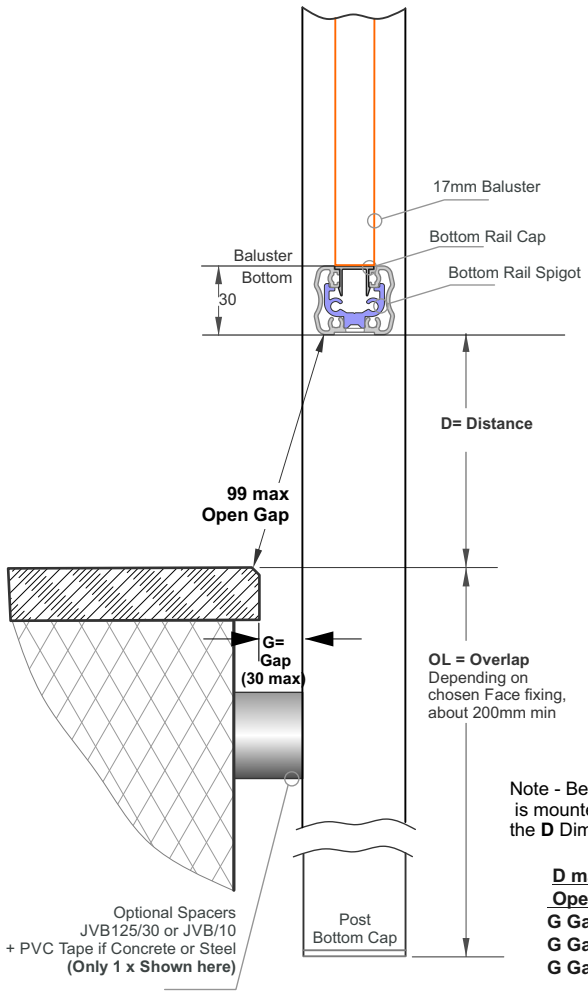

Note - Because the Bottom Rail is mounted forward of the Deck Edge the **D** Dimension is no longer 99mm.

D max values for a 99mm Opening to the deck
G Gap = 10mm D = 97mm
G Gap = 20mm D = 95mm
G Gap = 30mm max D = 91mm

4 - Width Offsets

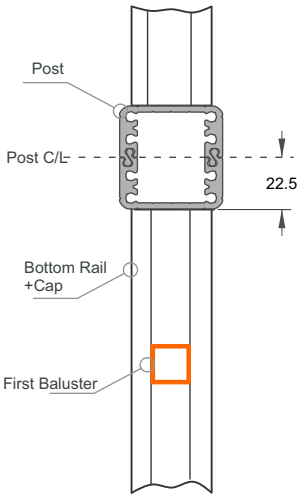

Viking post
JVB/007 shown
(or could be JVB/015)

5 - Cutting Guide

a - Hand Rail = Use maximum lengths
b - Post, Cut to
= HH - **A** + OL = Post Height
c - Bottom Rails (x2), Cut to
= PCL- 2x22.5 = PCL - 45

d - 17mm Balustrade Height
= HH - **A** - 99 - 30

6mm Glass, Inline - Split Rail (Corner Post available for Top Mount)

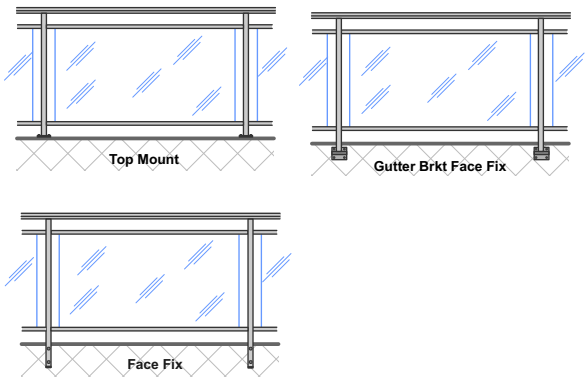

Apply bead of RTV silicon the the inside face of Post Pocket for full height of the Gass panel

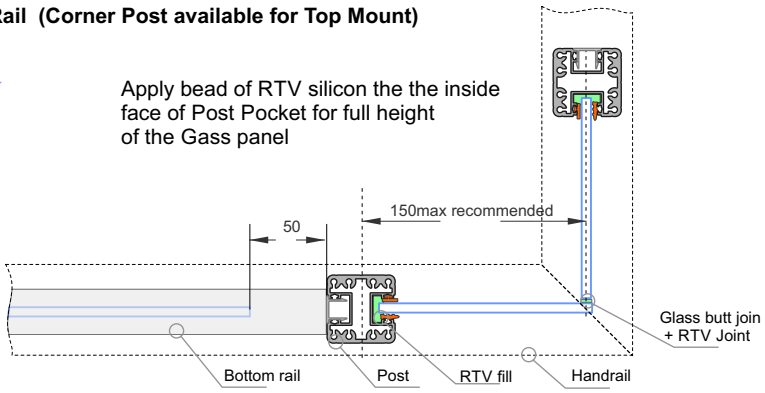

6mm Glass, Inline - Full Height (Corner Post available for Top Mount)

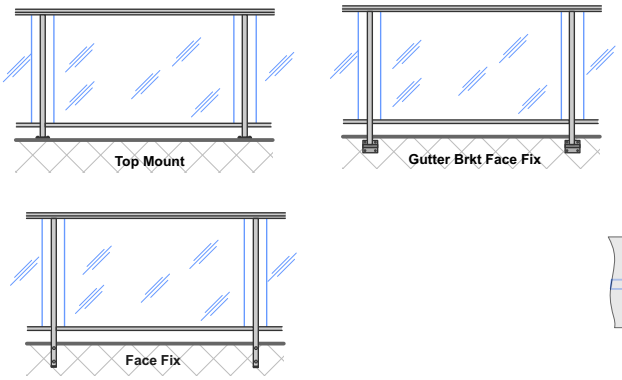

Apply bead of RTV silicon the the inside face of Post Pocket for full height of the Gass panel

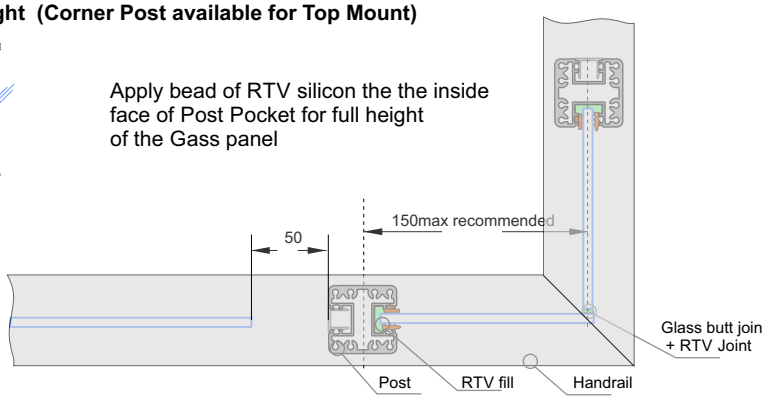

10mm Toughened Glass - Semi Frameless.w Handrail Corner Post available for Top Mount)

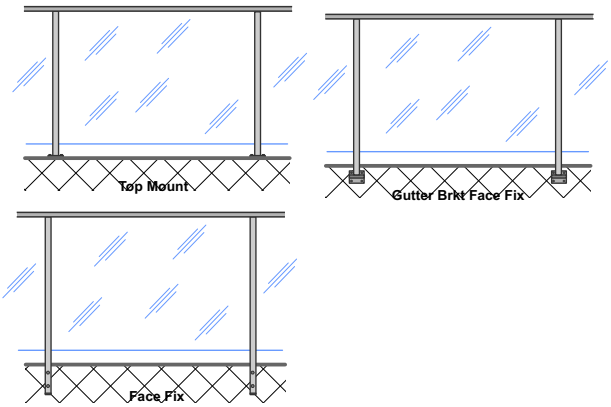

Apply bead of RTV silicon the the inside face of Post Pocket for full height of the Gass panel

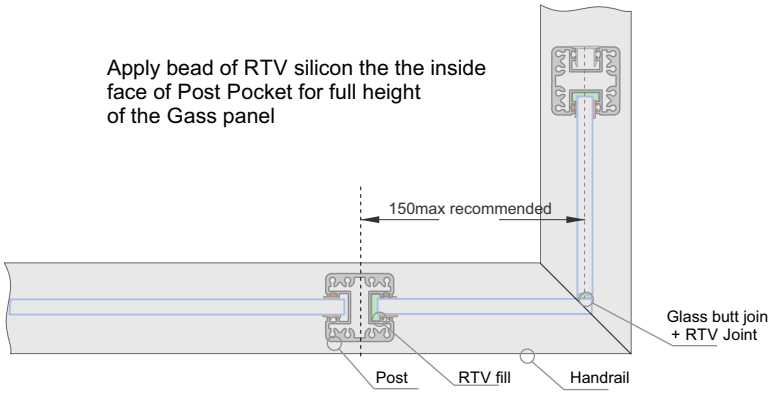

10mm Toughened Glass - Semi Frameless - JEB 222 Interlinking Rail + JEC29 Brackets, Deck side.

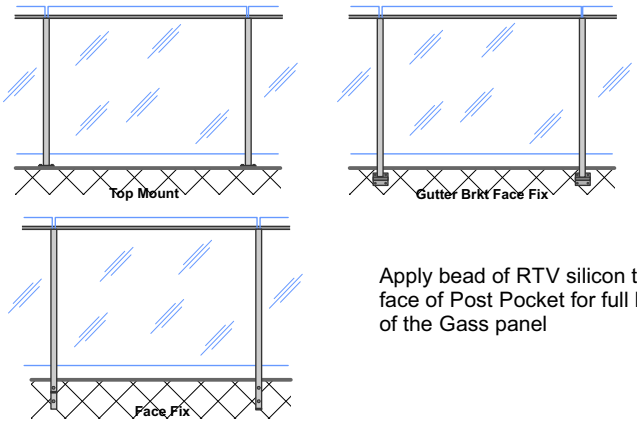

Apply bead of RTV silicon the the inside face of Post Pocket for full height of the Gass panel

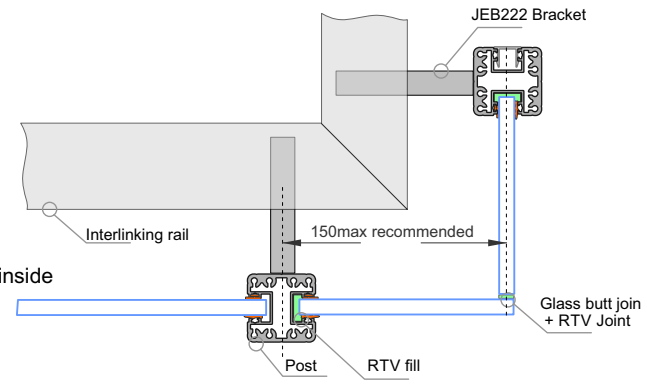

17mm Baluster - Split Rail. Handrail + Top and Bottom Rail.

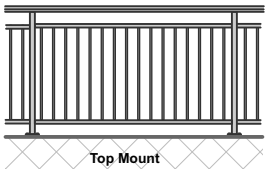

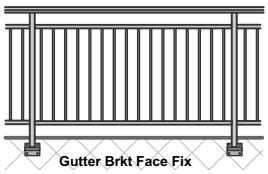

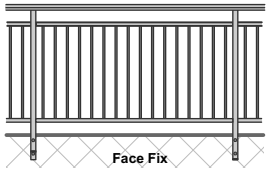

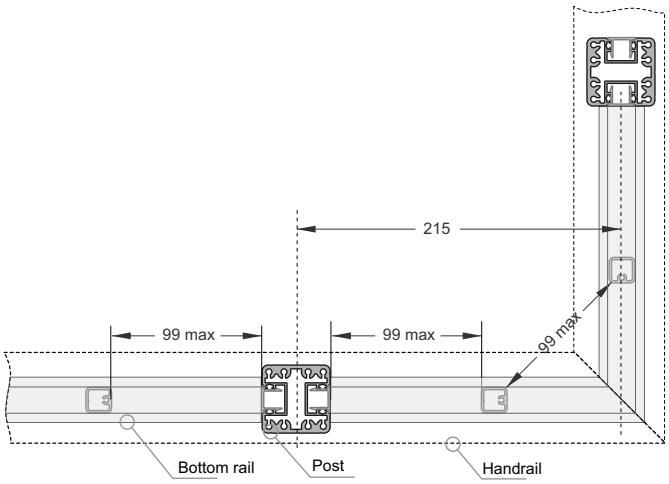

17mm Baluster - Full Height. Handrail + Bottom Rail.

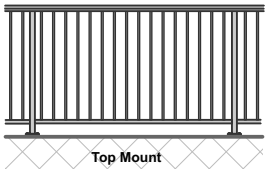

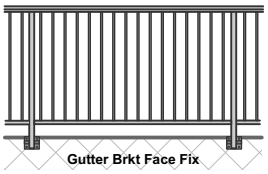

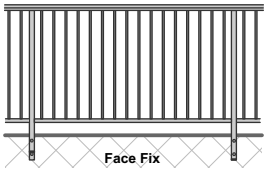

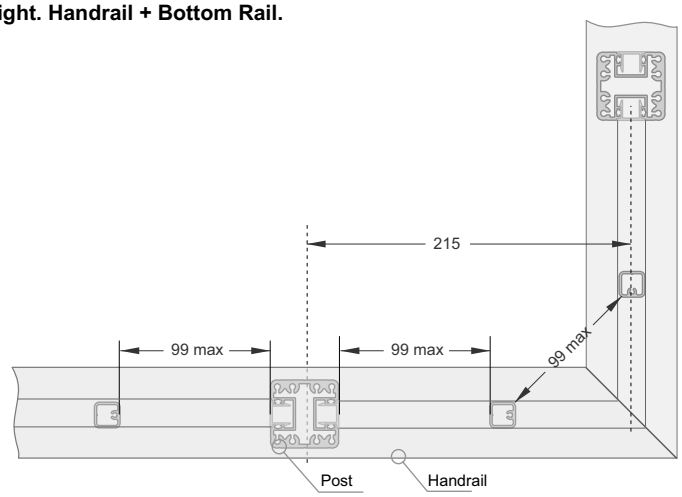

Glass Cleaning and Maintenance

Architectural glass products must be properly cleaned during the construction period so visual and aesthetic clarity are maintained. Because glass can be permanently damaged if improperly cleaned, glass producers and fabricators recommend strict compliance with the following procedures.

First, determine whether the glass is clear, tinted or reflective. Surface damage is more noticeable on reflective glass compared with the other glass products. If the reflective coated surface is exposed, either on the exterior or interior, special care must be taken when cleaning, as scratches can result in coating removal and a visible change in light transmittance. Cleaning tinted and reflective glass in direct sunlight should be avoided. Cleaning should begin at the top of the building and continue to the lower levels.

Commence cleaning by soaking the glass surfaces with clean water and a soap solution to loosen dirt or debris. Then, using a mild, non-abrasive commercial window washing solution, uniformly apply the solution to the glass surfaces with a non-abrasive applicator and follow with a squeegee to remove all of the cleaning solution from the glass surface.

Ensure that no metal parts of the cleaning equipment touch the glass surface and that no abrasive particles are trapped between the glass and the cleaning materials. All water and cleaning solution residue should be dried from the window gaskets, sealants and frames.

Scratches and Metal Scrapers

Scratches can occur from hard pointed objects or poor handling, but most often occurs from the careless removal of foreign matter from the glass surface.

Mortar splatter and paint are common offenders and efforts to remove after hardening almost always lead to surface damage. It is essential that the foreign materials are removed before they harden. Better still, if construction work continues after glazing, that the glazed areas are protected by adhesive plastic films or suitable tarpaulins or covers.

One of the common mistakes made by non-glass trades people, including glass cleaning contractors, is the use of razor blades or other metal scrapers on a large portion of the glass surface. Using large blades to scrape a window clean carries considerable risk of causing damage to the glass.

The glass industry, fabricators, distributors and installers neither condones nor recommends any scraping of glass surfaces with metal blades or knives. Such scraping usually permanently damages or scratches the glass surfaces. When paint or other construction materials cannot be removed with normal cleaning procedures, a new 25mm razor blade may have to be used. The razor blade should be used on small spots only. Cleaning should be done in one direction only. Never scrape in a back and forth motion as this could trap particles under the blade that could scratch the glass.

Blades or scrapers can dislodge “pickup” on toughened glass. There are fine particles of glass that are fused on to the surface during toughening. Once dislodged they can scratch the glass.

Glass Cleaning, Do’s and Don’ts

DO NOT..

- Do Not - Use Scrapers of any type or size on a Glass surface
- Do Not - Leave building dirt or residues to remain on Glass for a period of time.
- Do Not - Begin cleaning glass until you have identified the surface type.
- Do Not - Clean Glass surfaces in direct sunlight.
- Do Not - Allow dirty water or cleaning residues to remain on the Glass.
- Do Not - Begin cleaning before rinsing off a loose residues.
- Do Not - Use abrasive cleaning solutions, materials or solvents.
- Do Not - Allow metal parts of the cleaning equipment to come in contact with the Glass.
- Do Not - Trap abrasive particles between the cleaning material and the Glass.

DO...

- Clean glass promptly when dirt or building residues appear.
- Determine glass surface type.
- Exercise special care when cleaning coated surfaces.
- Avoid cleaning glass surfaces in direct sunlight.
- Start cleaning at the top of a building, then continue to lower levels.
- Soak the glass surface in a clean soapy solution before cleaning.
- Use a mild non abrasive commercial cleaner.
- Use a squeege to remove all cleaning solution.
- Try your procedures on a small window and check.
- Caution other trades re the care and protection of the glass surfaces.

Residues of surface grit may be present from the toughening production process.
These grit particles must not be dragged across the surface.
NEVER use Metal Scrapers

All above reprinted with permission from Metro Glass Tech

Powder Coating Installation Care

Warning re use of solvents:
- In some cases strong solvents are recommended for thinning various types of paints and also for cleaning up mastics and sealants.
- These can be harmful to the extended life of the powder coated surface, and must not be used for cleaning purposes.
- It is important to note that the damage will not be visible immediately and may take up to l2 months to develop.

If paint splashes or sealants and mastics need to be removed then the following may be safely used:
Methylated Spirits, Ethyl Alcohol, Isopropanol or preferably a mild detergent in warm water.

Joinery Protection during Installation:
All the activity on a construction site means that your powder coated items may get knocked or scratched, splattered with mortar, plaster, textured coating or paint during the later stages of construction.

Please ensure that all powder coated articles are masked or covered at this time.
It is far easier to prevent accidents than to try and correct them.
Should your joinery receive mortar or paint splashes see that these are removed before cure and follow the instructions contained in this brochure.

Typical sticker used to warn other trades of the need to protect and mask off powder coated joinery (applies to anodised joinery also)

"IMPORTANT ALL TRADES"
This valuable aluminium joinery will suffer permanent damage from: plaster, mortar and paint splashes - Protect if splashes occur - Immediately wash down joinery with water or meths - Do not allow splashes to harden! ~ Do not use solvents! - Do not remove this label until final clean completed.

This photograph display damage that has occurred on site, post installation. The photo of the masked joinery displays clear signs of damage that could have occurred were it not masked. Please ensure that your joinery is protected right through the entire construction process.

Powder Coating Maintenance

External - Maintenance Program:
To extend the life of external powder coated articles and to comply with warranty requirements for powder coated aluminium joinery, a simple, regular maintenance program must be implemented.
The effects of ultra violet light, atmospheric pollution, dirt, grime and airborne salt deposits will all accumulate over time and must be removed or surface staining and weathering will occur, leading to an unsightly appearance.

For external coatings, cleaning should take place every six months. In areas where pollutants are more prevalent, such as beachfront houses and industrial or geothermal areas, then a cleaning program should be carried out on a more frequent basis ie. every one to three months.

Fences or Balustrades in close proximity to swimming pools must be washed down every six months, to clean off chlorine and salt deposits.

Cleaning your powder coating:
1. Carefully remove any loose surface deposits with a wet sponge.
2. Use a soft brush (non abrasive) and a mild household detergent (do not use solvents) in warm water, remove dust, salt and other deposits.
3. Rinse off with clean fresh water.

Restoring weathered or scratched surfaces:
Repair of Scuffed or Scratched surfaces
Dulux Spray Cans are available in all colour card colours.

Repair of Small Scratches or Chips.
Dulux Dabsticks are ideally suited for the repair of small scratches.
Dabsticks may not be available in all colour card colours.

Repair of Weathered areas .
Dulux Gloss Up is a light to medium cutting cream ideally suited for gloss restoration and has been specifically designed for this purpose.
Gloss Up contains no waxes or silicone and is a one step system.

Contact Dulux Powder Coatings , ph 0064 9 441 8244

All pages © Copyright Juralco Aluminium Building Products Ltd, 2023