

JURALCO

JURALCO EDGETEC® COMMERCIAL C3 BALUSTRADE SYSTEM

ISSUE 11-26 v1

Juralco Aluminium Building Products Ltd designs and distributes specialist aluminium joinery systems through a national network of franchised fabricators and agents.

For more than 25 years we have been at the forefront of specialist aluminium door and window products suitable for New Zealand joinery and building methods. Our comprehensive product range includes security and insect screens, balustrades and gates, shutters and awnings, louvre roofs, shower screens, wardrobe doors and organisers and internal doors.

The Juralco Edge® Commercial C3 System can support Glass up to 15mm thick. The system is extremely versatile and can be custom made in a range of configurations and powder-coat colours to meet most modern architectural requirements.



Also available, 17mm sq, 19mm sq and 60mm x 17mm metal slat balusters

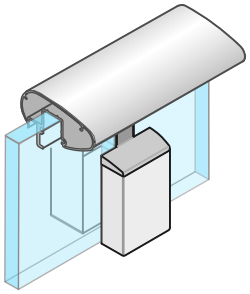

Semi frameless and Framed Glass pictures

Cover - 10mm Glass - With Bottom Rail ie Fully Framed.
Below - 12mm Glass No Bottom Rail ie Semiframeless
75mm Aerofoil, Round, Rectangular
all Post mounted Handrails

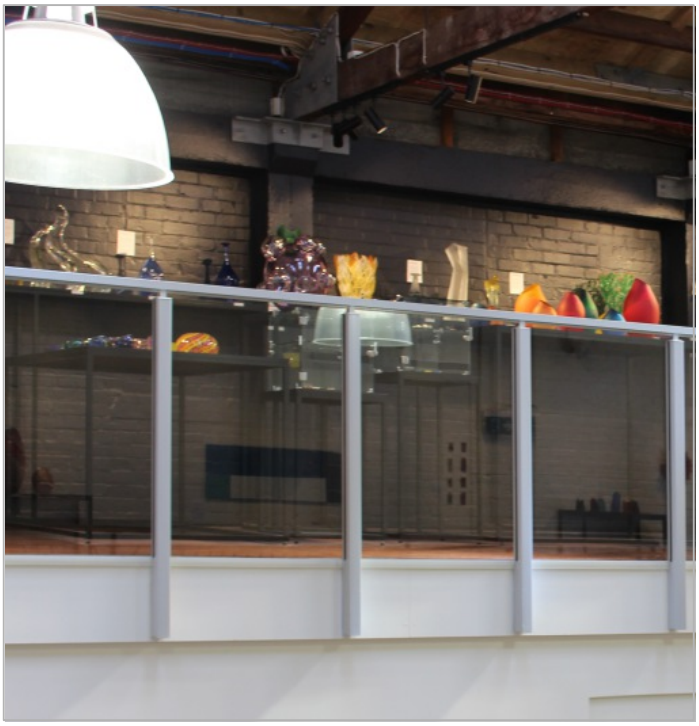

Additional Semiframeless Glass configurations

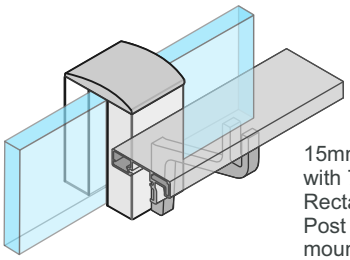

15mm Glass
with 75mm Aerofoil, Round,
Rectangular or Interlinking Rails.
Post mounted Handrails
mounted off JEC29 Brackets
on the inside of Post

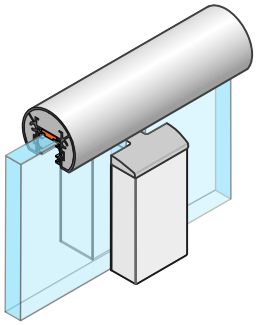

15mm Glass
With Top Rails
attached
to Glass Top edge,
ie not Post mounted

All pages © Copyright Juralco Aluminium Building Products Ltd, 2022

Complies With AS/NZS 1170:2002, NZS 4223.3.2016, NZ Building Code B1, B2, F2, F4 and F9

Juralco Edgetec® Commercial C3 Balustrade System is suitable for Occupancy Types B, E and C3. Also for C1, C2 and D (not C5) as per AS/NZ 1170.1.2002

Code	Type of Occupancy for part of the building or structure	Specific Uses	Glass Panels, Metal Balusters
B, E	Offices and work areas not included elsewhere including storage areas.	Light access stairs and gangways not more than 600mm wide. Fixed platforms, walkways, stairways and ladders for access Areas not susceptible to overcrowding in office and institutional buildings; also industrial and storage building.	All for 10mm and 12mm Toughened Glass and17mm sq Balusters Suitable B, E and C3 only
C3	Areas without obstacles for moving people and not susceptible to over crowding	Stairs, landings, external balconies, edges of roofs etc.	
C1/C2	Areas with tables or fixed seating	Areas with fixed seating adjacent to a balustrade; restaurants, bars etc	All for 15mm Toughened Glass and19mm sq Balusters Suitable C1, C2 and D only (not C5)
D	Retail areas	All retail including public areas of banks/building societies, not subject to over crowding	

Note 1 **For 10mm and 12mm Toughened Safety Glass and 17mm sq, 60mm x 17mm Balusters suitable for B, E and C3 only**
For 15mm Toughened Safety Glass and 19mm sq Balusters suitable for C1, C2 and D (not C5)
Glass must have a minimum strength of 100MPa. All edges polished

Note 2 **Juralco Balustrade Systems building code compliance documentation requires all balustrade installations are to be completed in accordance with the requirements of our authorised installer certification.**

Note 3 **The Dulux powder coating warranty period is conditional upon being maintained in accordance with the Dulux 'Care and Maintenance Instructions'. Contact your balustrade installer for a copy of the Care and Maintenance procedure.**

Note 4 **All Glass Balustrades must have Top or Side mounted Handrail to conform to NZS 4223.3.2016.**

masterspec partner
Section 4852JB

Index

Type	Pages	Description. Use the Bookmarks List to jump to selected pages
Specifications	4	Juralco standard specification sheet and Powder coating recommendations
Configurations	5 - 6	Shows typical Glass and Metal baluster layouts. Top fix and Face fix
Extrusions	7 - 11	Shows all Extrusions and Components
Mount Types	12	Shows Side Fix and Top Fix mount types
Mountings	13 - 25	Shows Mounting details to various structures. Timber (p13-17), Steel (p18-21) and Concrete (p22-25)
Design Details	26 -31	Shows various off sets. Glass Balustrade (p26-27) Metal Balusters (p28-31)
	32 - 35	Shows various Connection details
Interlinking Rails	36 - 39	Shows Interlinking Rails . Rectangular (p35-36), Round (p37), 40mm SS (p38)
Hand Rails	40	Shows Wall mounted Handrail options
Surface Care	41- 42	Instructions for the care of Powder coated and Glass surfaces

Juralco Edgetec® Commercial C3 Balustrade System - Specifications, Powder Coating

Juralco Aluminium Building Products Ltd (JABP)

1.Scope

- This specification details the documents the Juralco Edgetec® Commercial C3 Balustrade System refers to in relation to the New Zealand Building Code, the manufacturer's documents, products used in the System and requirements in relation to fixing and surface finishing.

2. NZBC Compliance

- The Juralco Edgetec® Commercial C3 Balustrade System has been reviewed by Lautrec Technology Group Ltd. to demonstrate compliance with the structural requirements of the New Zealand Building Code and AS/NZS 1170 : 2002 occupancy B, E, C1, C2, C3 and D, to NZS 3604 Low, Medium, High, Very High and Extra High Wind Zones 2.5kpa max
  - The Structural Engineering design includes the requirements of B1 Structure, B2 Durability, F2 Hazardous material and F4 Safety from falling, all from the Building Code.
- Verification Method B1 / VM1, B2/AS1, F4 / AS1
- All glass used in the Juralco Edgetec® Commercial C3 Balustrade System must conform to AS/NZS 2208.
- Complies with NZS 4223.3.2016
- Wind pressure (2.5kPa max)

3. Manufacturer's Documents

- The Juralco Edgetec® Commercial C3 Balustrade System manual details all extrusions and components used for the fabrication and installation/fixing of the system.
- A Producer Statement 1(Design) is available.
  Copies of the above documents are available from:
  Juralco Aluminium Building Products Ltd
  48 Bruce McLaren Rd, Henderson, Auckland
  Phone 09 478 8018 Fax 09 478 7883 Email specify@juralco.co.nz
- Any deviation from the standard fabrication or installation/fixing must be accompanied by a site specific PS1 with site specific calculations and drawings

4. Products

- Only extrusions, components and hardware supplied by or specified by JABP may be used in the Juralco Edgetec® Commercial C3 Balustrade System
- Aluminium extrusions, components and hardware – unless specified are manufactured to 6060 T5 specifications
- Stainless Steel components, hardware, fixings – all components to 316 grade
- Glass - all glass used in the Juralco Edgetec® Commercial C3 Balustrade System must conform to the specifications as listed in the Juralco Edgetec® Commercial C3 Balustrade System manual with each panel conforming to AS/NZS 2208 as confirmed by the Safety Stamp detailing the manufacturer's description and licence number.

5.Surface Finishing

- Juralco Aluminium Building Products Ltd is a Dulux Registered Applicator site, registration number 2101. JABP uses only Dulux branded powder coating materials
- Dulux Duralloy® powder coating systems are suitable for properties greather than 100m from high tide level AAMA 2603 performance. Residential buildings, 3 levels max. Warranty 10 yrs
- Dulux Duralloy Plus® powder coating systems are suitable for properties greater than 10m from high tide level. AAMA 2603 performance. Residential and Light commercial buildings, 3 levels max Warranty 15 yrs
- Dulux Duratec® powder coating systems are suitable for properties greater than 10m from high tide level AAMA 2603 and 2604 performance. All Residential and Commercial buildings. Warranty 25 yrs

6. Installation and Fixing

- The Juralco Edgetec® Commercial C3 Balustrade System must only be installed in accordance with the Juralco Commercial C3 Balustrade System manual
- Any deviation from that specified in the Juralco Edgetec® Commercial C3 Balustrade System manual must only be in accordance with the site specific PS1 with site specific calculations and drawings listing the non standard details.
- The Juralco Edgetec® Commercial C3 Balustrade System System must only be fabricated/installed by a Juralco approved fabricator
- Upon completion of the installation the fabricator must supply the owner with a PS3 (Construction)

Important information - Powder Coating systems.

Powdercoat Systems The new standard Dulux powder coating system used by Juralco is Duralloy Plus®. Also Duralloy® and Duratec®. All as per specs above. Juralco Powder coated prices are for Duralloy Plus® and Duralloy® (same pricing). Duratec® prices on application.

Attachment to structures A PVC Tape or similar material spacer must be used to separate powder coated aluminium items from all concrete and steel structures. Failure to do so can lead to the chemicals in the structure affecting the powder coating, leading to corrosion.

Swimming Pools The chlorinated water in swimming pools can cause the deterioration of powder coated surfaces, leading to corrosion of the underlying surface. It is recommended that Powder coated surfaces be 1200mm min from a pool.

Care The Dulux powder coating warranty period is conditional upon the surface being maintained in accordance with the Dulux 'Care and Maintenance Instructions'. Download from Dulux or refer to the back page of this manual.

Juralco Edgetec® Commercial C3 Balustrade System - Typical Layouts

Minimum Balustrade height above floor level shall be as per Table 1 of the NZ Building Code, Acceptable Solution F4/AS1

1

10mm Toughened Safety Glass - Fully Framed
Selected Hand Rails + Bottom Rail. Glass fixed to Posts and Top and Bottom Rails

Occupancy A, A other, B, E and C3 only (Not C1, C2 and D)



2

10mm Toughened Safety Glass - Full height
Selected Hand Rails + Bottom Rail. Glass fixed to Top and Bottom Rails

Occupancy A, A other, B, E and C3 only (Not C1, C2 and D)



3

10mm Toughened Safety Glass - Full height Handrail + Split Rails
Selected Hand Rails + Bottom Rail. Glass fixed to Top and Bottom Rails

Occupancy A, A other, B, E and C3 only (Not C1, C2 and D)

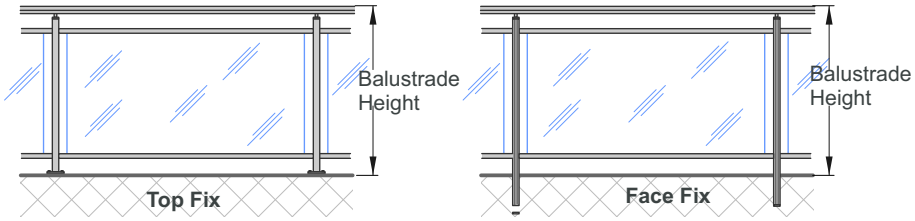

4

12mm Toughened Safety Glass - Semi Frameless
Selected Hand Rails (attached to Posts) Glass fixed to Posts and Top Rail

Occupancy A, A other, B, E and C3 only (Not C1, C2 and D)



5

15mm Toughened Safety Glass - Semi Frameless
Selected Interlinking Top Rail (mounted on Glass) or Selected handrail (mounted on posts)
Glass fixed to Posts

Occupancy A, A other, B, E and C3 + C1, C2 and D

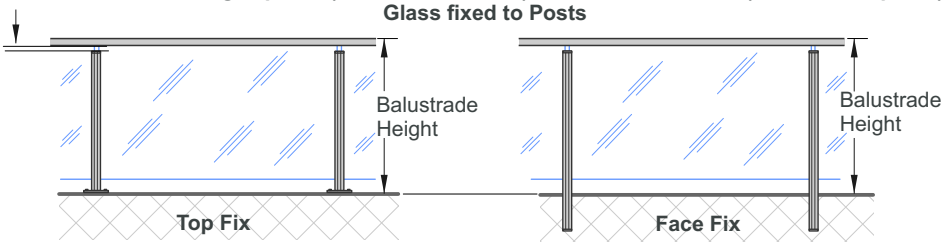

6

15mm Toughened Safety Glass - Semi Frameless.
JEC 29 Side mount Brackets Deckside mounted on Posts + selected Hand Rails
Glass fixed to Posts

Occupancy A, A other, B, E and C3 + C1, C2 and D

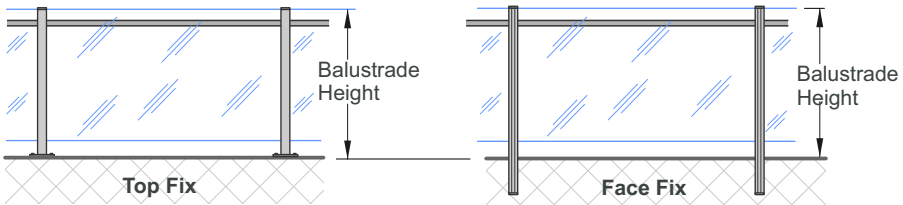

Juralco Edgetec® Commercial C3 Balustrade System - Typical Layouts

Minimum Balustrade height above floor level shall be as per Table 1 of the NZ Building Code, Acceptable Solution F4/AS1

7

17mm Baluster - Full Height. Selected Handrail + Bottom Rail.

Occupancy A, A other, B, E and C3 only (Not C1, C2 and D)

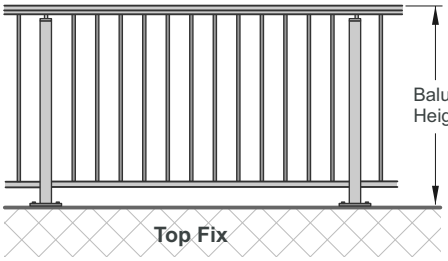

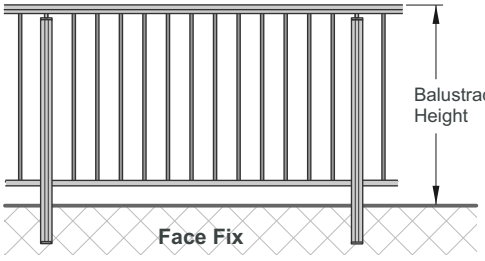

8

17mm Baluster - Split Rail. Selected Handrail + Top and Bottom Rail.

Occupancy A, A other, B, E and C3 only (Not C1, C2 and D)

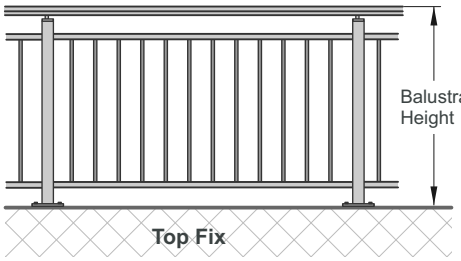

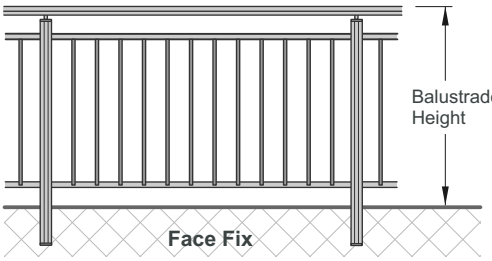

9

19mm Baluster - Split Rail. Selected Handrail + Top and Bottom Rail.

Occupancy A, A other, B, E and C3 + C1, C2 and D

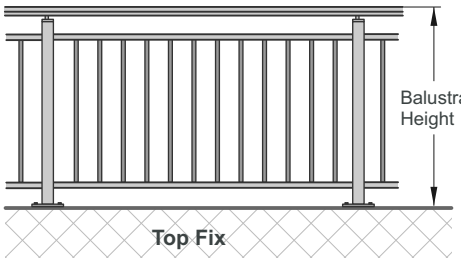

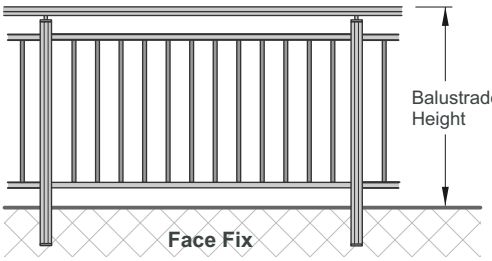

10

60mm Slat - Full Height. Handrail + Bottom Rail.

Occupancy A, A other, B, E and C3 only (Not C1, C2 and D)

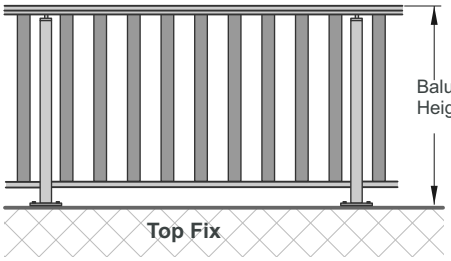

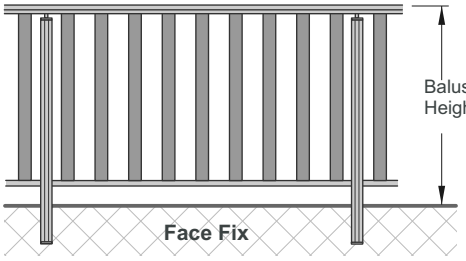

11

60mm Slat - Split Rail. Selected Handrail + Top and Bottom Rail.

Occupancy A, A other, B, E and C3 only (Not C1, C2 and D)

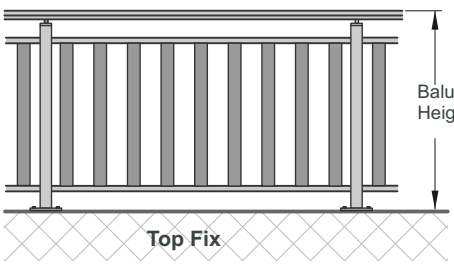

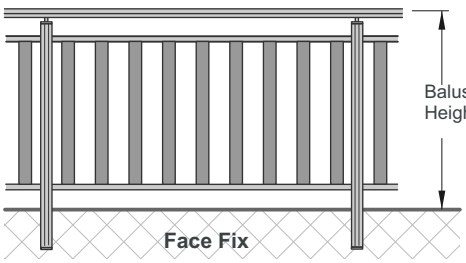

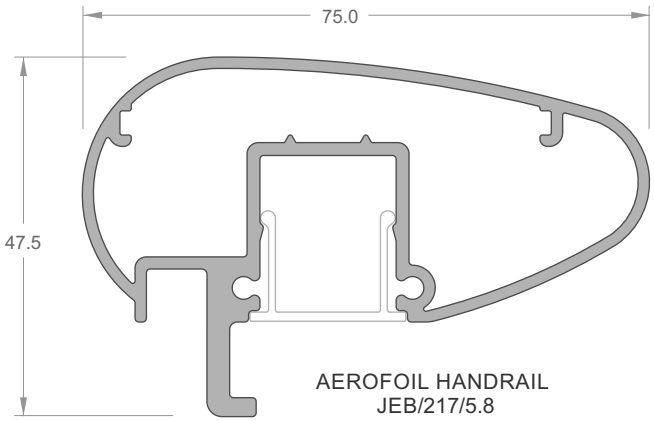

AEROFOIL HANDRAIL
JEB/217/5.8

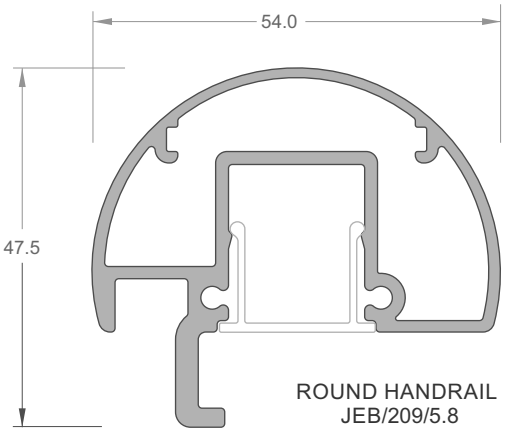

ROUND HANDRAIL
JEB/209/5.8

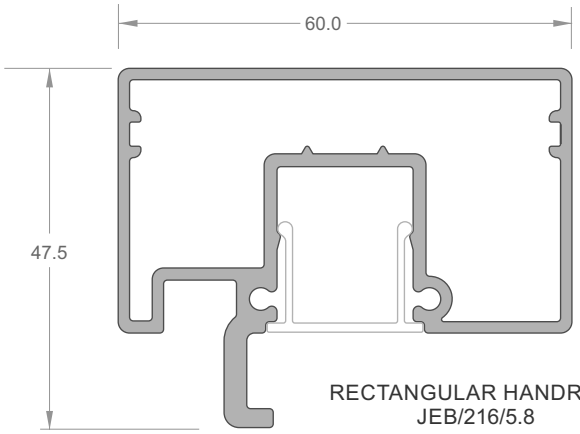

RECTANGULAR HANDRAIL
JEB/216/5.8

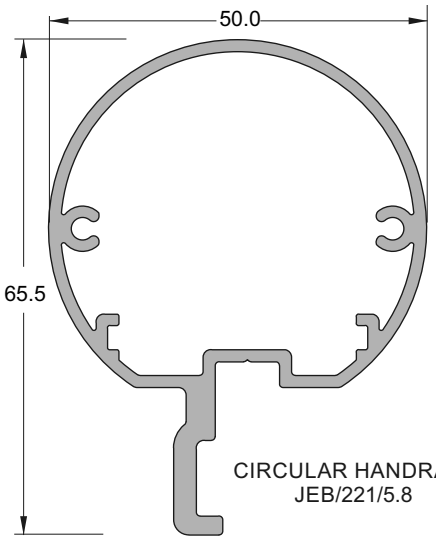

CIRCULAR HANDRAIL
JEB/221/5.8

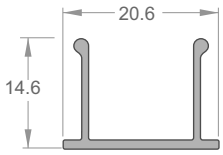

HANDRAIL INFILL CLIP
JEB/206/5

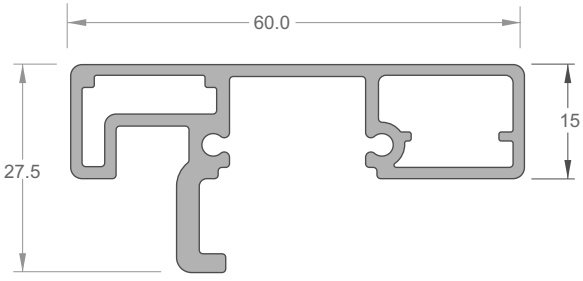

INTERLINKING RAIL
JEB/222/5.8

Note - Infill clips are not used

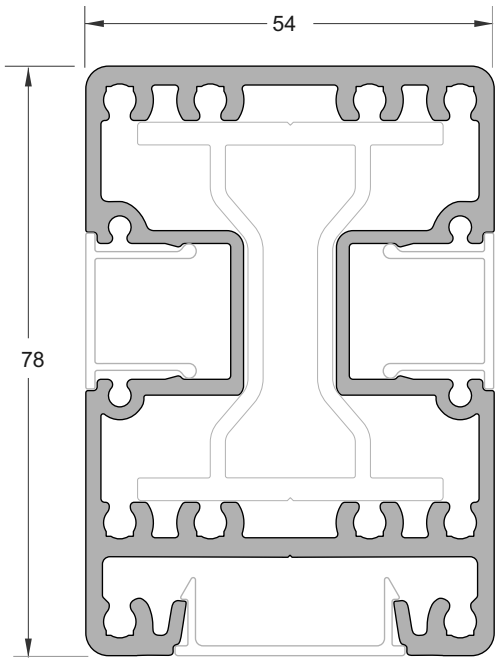

POST
JET/208/5.3

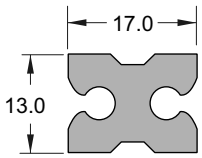

BOTTOM RAIL
SPIGOT
JEB/210/5

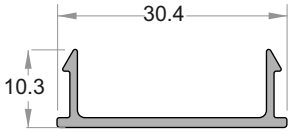

POST FACE FIX INFILL CLIP
JEB/203/5

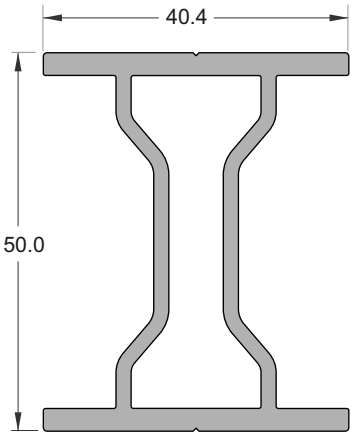

POST STIFFENER
JGF/213/5

Components suitable for 10mm, 12mm Glass and 17mm sq and 60mm x 17mm Slat Metal Balusters

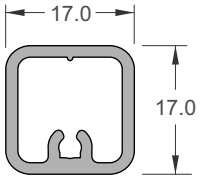

INFILL
17mm BALUSTER
JVB/005/5.3

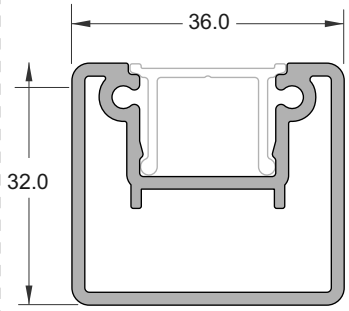

BOTTOM RAIL
JEB/202/5.8

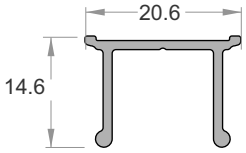

INFILL CLIP
JEB/218/5.8

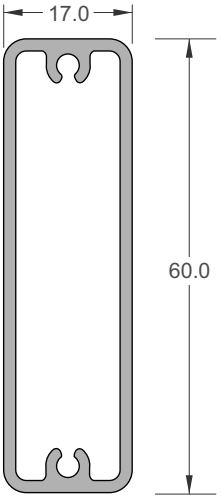

INFILL
60mm SLAT
JVB/019/5.3

Components suitable for 19mm Sq Baluster

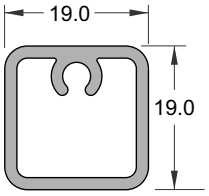

19MM BALUSTER
JET/905/5.35

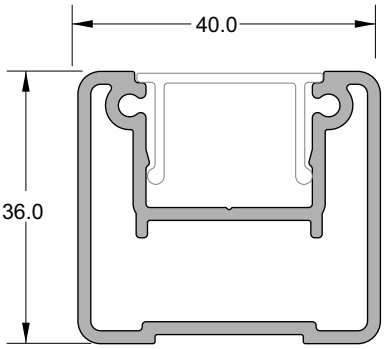

BOTTOM RAIL
JET/902/5.8

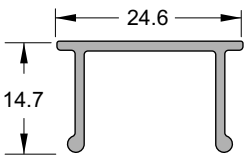

INFILL CLIP, FLAT
JET/906/5.8

Juralco Edgetec® Commercial C3 Balustrade System - Components

Base plate
Part No JET201

Top Fix.

For Fixing to Concrete and Steel

Note : For Fixing to Concrete
Ocupancy B, E and C3 only

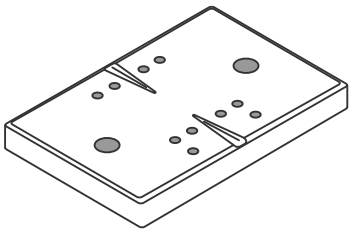

150mm x 100mm x 15mm - 2 x 14mm dia holes

Base plate
Part No JET221

Top Fix.

For Fixing to Timber, Concrete or Steel

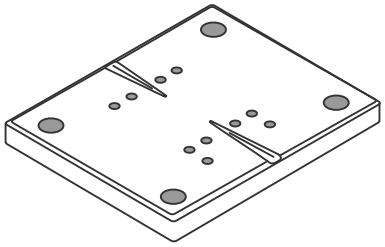

150mm x 127mm x 12mm - 4 x 13mm dia holes

Handrail Mount
Part No JET23

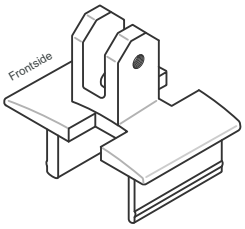

Angled Hand Rail Mount - Double Pocket
Fits over Post 78mm x 54mm

Handrail Mount
Part No JET24

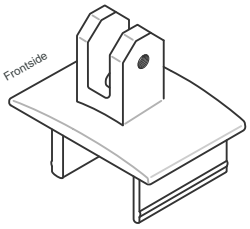

Angled Hand Rail Mount - No Pocket
Fits over Post 78mm x 54mm

Handrail Mount
Part No JET 25RH or LH

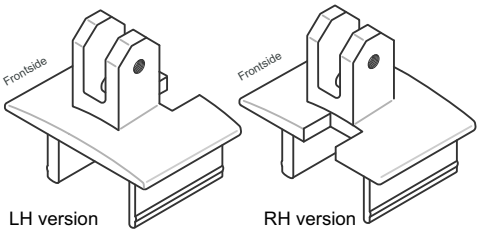

Angled Hand Rail Mount - Single Pocket, LH & RH
Fits over Post 78mm x 54mm

Top Cap
Part No JET 20

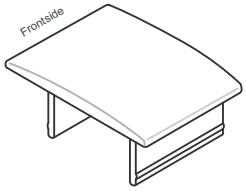

Fits over Post 78mm x 54mm

Top Cap
Part No JET 21

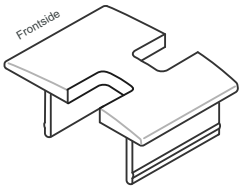

Double Pocket
Fits over Post 78mm x 54mm

Top Cap
Part No JET 22 RH or LH

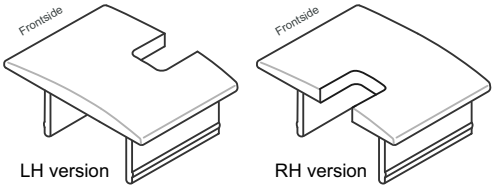

Single Pocket. RH or LH
Fits over Post 78mm x 54mm

Handrail Clamp Screw
Part No JEC Screw M8x20

Handrail Clamp



M8 x 20 SS Grub screw

Post/Baseplate Screw
Part No JVBHTSCREW/50x10

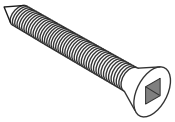

50mm SS HT PK C/S sq drive screw

19mm Baluster Screw
JVBSCREW/38x8

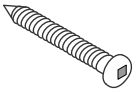

Handrail assembly
Part No JEC 29/Kit

For Wall or Post mounting

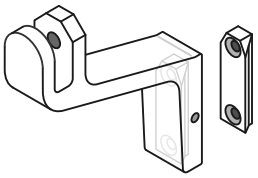

Includes 2 x grub screws

Face Fix Spacer
JVB 125/30mm

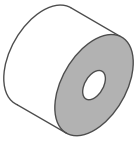

38mm dia x 30mm long.

Face Fix Spacer
JVB 125/15mm

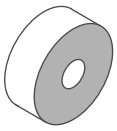

38mm dia x 15mm long.

Face Fix Spacer
JVB 125/10mm



38mm dia x 10mm long.

Face Fix Spacer
JVB/125/1000

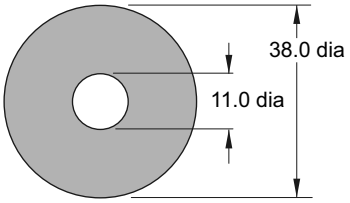

Post Bottom Cap
JET 10

Face Fix

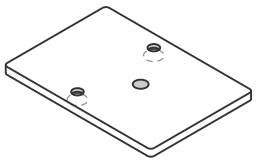

78.5mm x 54.5mm - Fits under face Fix Posts
Attach with No 6 x 12 C/S SS PK screws

Washers

Face Fix



M10 x 30 x 2mm
Round Washer

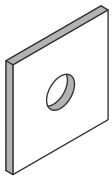

50mm sq x 3mm SS
JET SQWSH

EPDM Spacer Washer
JVB 126



38mm dia x 3mm.

Wedge - 15mm Glass
JWG/W20/400/Grey

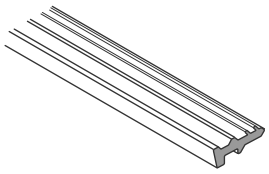

Wedge - 12mm Glass
JECW8/75

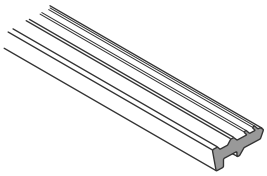

Back Seal
JET/BSEAL/100

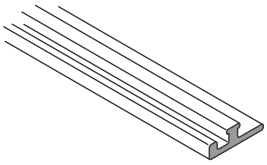

50mm Glazing Block
JEC15

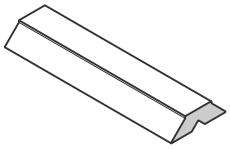

5mm high x 16.5mm x 50mm long.

Glass Support Bracket
JEC13

Nylon

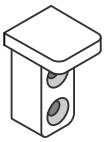

17mm x 13mm x 32mm high. Attaches to Post
with 2 x No 10 x 19 SS C/S PK Screws

Wedge - 10mm Glass
JECW6/75

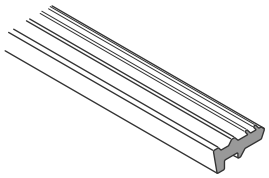

SIKA Supergrip
JECSUPERGRIP30

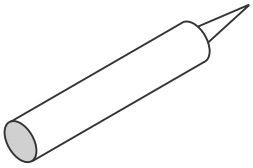

For All Coachscrews fixings

Rhodorsil V60 Clear Silicone
H/RTV419098

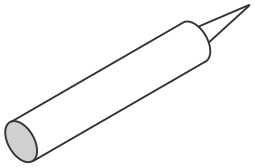

Construction Silicone

Plastic Packer - Glass

Available from local Glass and Hardware stores

Part No	Thickness
H/PP1.5	1.5mm
H/PP2	2mm
H/PP3	3mm
H/PP4	4mm
H/PP5	5mm

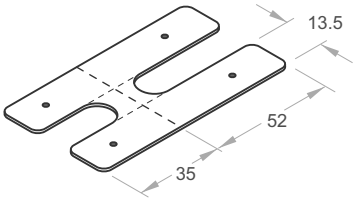

Cut down to suit. 35x13.5, 52x13.5

Rectangular Handrails and 75mm Aerofoil - End Cap, Straight and 90deg corners

All ex 3mm Aluminium

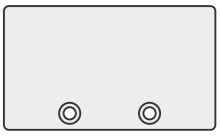

Rectangular End Cap
Part No JEC 03
Can be used as RH or LH

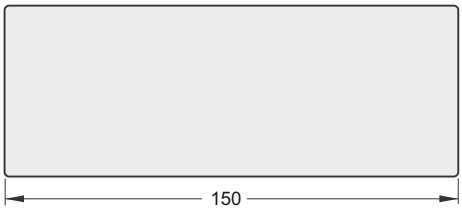

Rectangular and 75m Aerofoil Inline Joiner
Use 56.5 x 3 flat bar JA/189/5.0

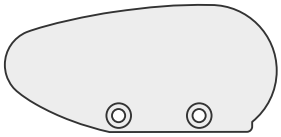

75mm Aerofoil End Cap
Part No JEC 11
Available as RH or LH

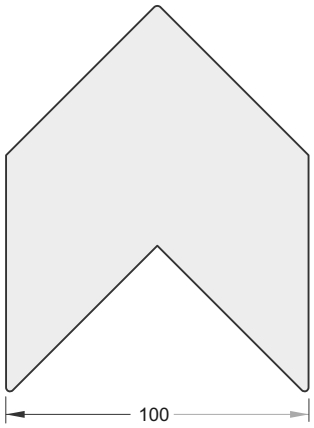

Rectangular and 75m Aerofoil
90deg Corner Joiner Part No JEC 01

Round and Circular Handrail, End Cap, Straight and 90deg corners

All ex 3mm Aluminium

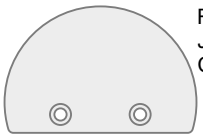

Round End Cap
JEC 06
Can be used as RH or LH

(for Round
HandrailJEB/209)

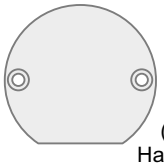

Circular End Cap
JEC 208
Can be used as RH or LH

(for Circular
Handrail JEB/221)

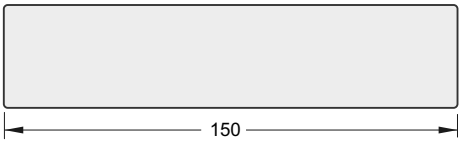

Round Inline Joiner
Use 34.0 x 3 flat bar JA/188/5.0

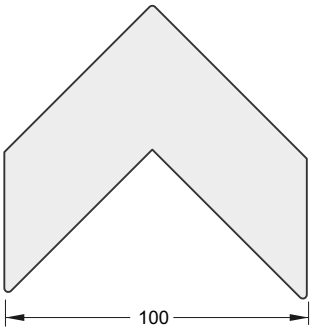

Round 90deg Corner Joiner
JEC04

Interlinking Rail End Cap, Straight 135 deg and 90deg corners

All ex 3mm Aluminium Plate



Interlinking Rail End Cap
Can be used as RH or LH

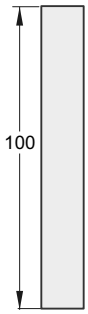

14mm
Straight Joiner
JEC32

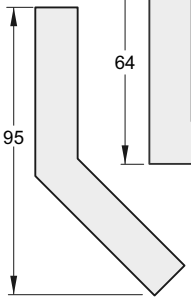

14mm, 135deg
Corner Joiner
JEC36

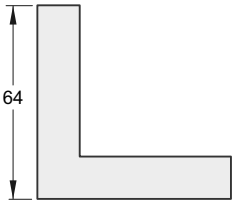

14mm, 90deg
Corner Joiner
JEC34

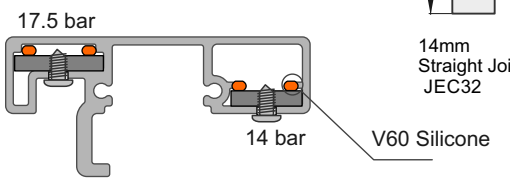

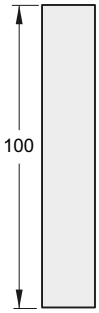

17.5mm
Straight Joiner
JEC33

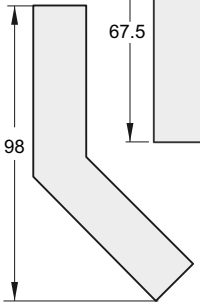

17.5mm, 135deg
Corner Joiner
JEC37

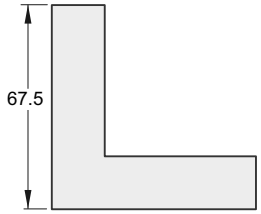

17.5mm, 90deg
Corner Joiner
JEC35

Joiners:
- With Joiner in place, spot drill from below for position
- Drill out joiner to 3mm dia, extrusion to 4mm dia
- Use No 6 x 1/4in SS ST Pan sq drive screw
- Insert dobs of V60 Silicone inside cavities before inserting
- Both ends to be attached.
- Joins must be within 300mm of Post
- Minimum distance between screw and end of handrail is 10mm

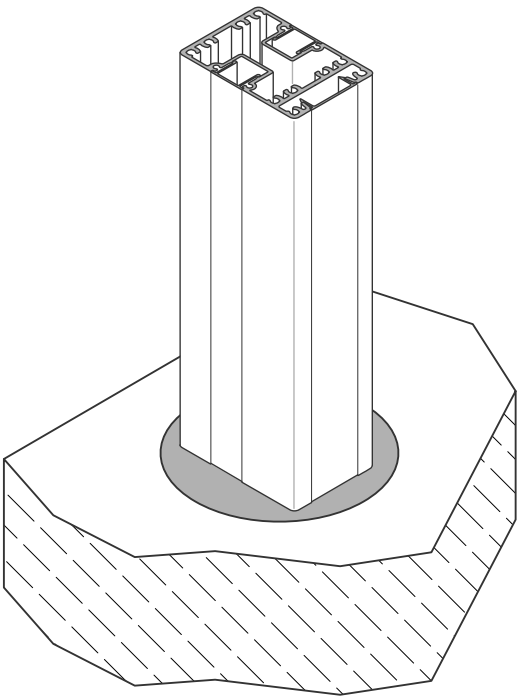

Top Fix
Concrete only.
Post cemented permanently in place

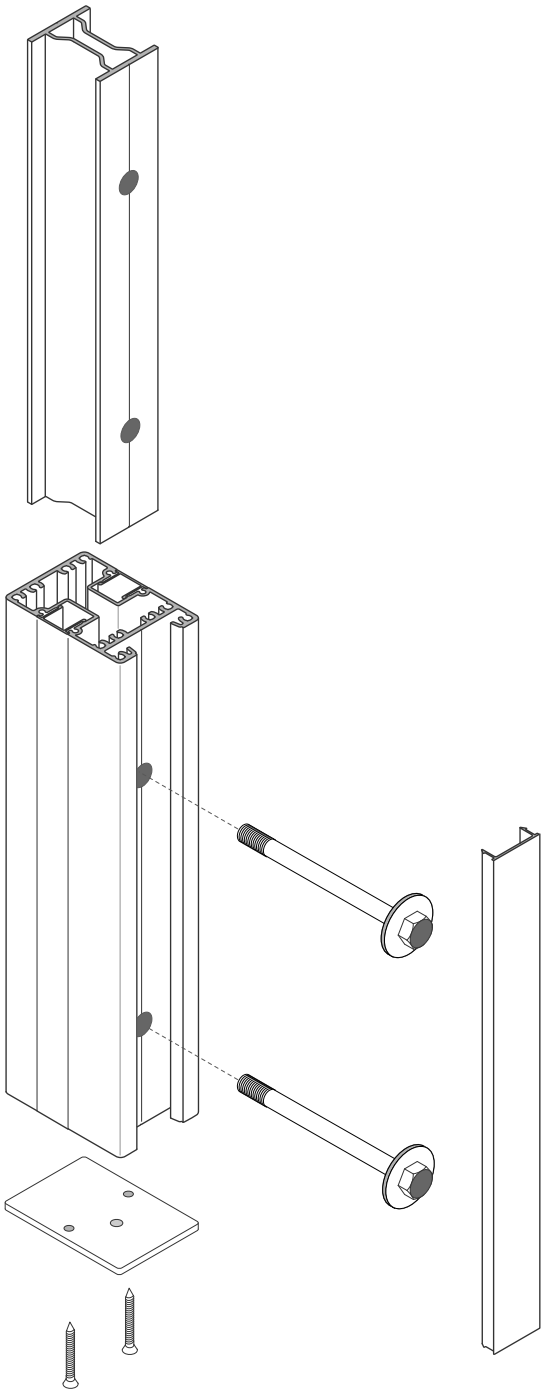

Face Fixed
Hidden fasteners.
For fixing onto Concrete, Steel or Timber.
Fixings with Coachscrews or Bolts

Note - For all Face Fix to Concrete or Steel there must be a PVC Tape layer between post and structure

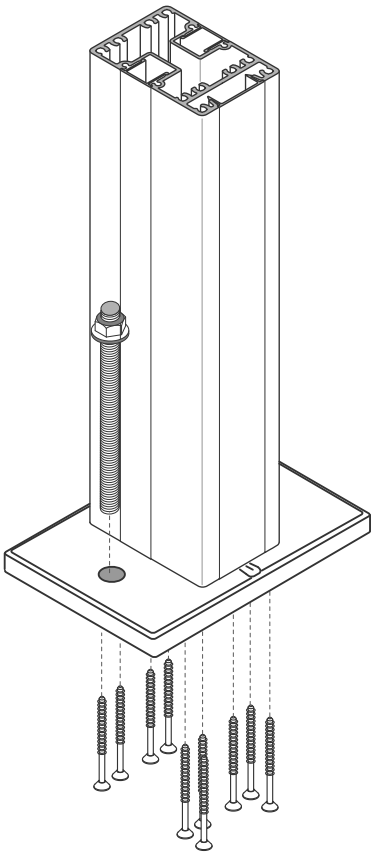

Top Fix
Baseplate, Single Post Type
Different Base plates for Concrete, Steel or Timber.
Fixings with Coachscrews or Bolts

Juralco Edgetec® Commercial C3 Balustrade System - Typical Post Fixings
Complies with NZS3604:2011 - Triple Boundary Joists, Exposed Deck

Typical TOP Fix to Timber - JET 221, 150mm x 127mm, 4 hole Base Plate - M10 SS Coachscrews

Up to and including Extra High Wind Zone

Occupancy C1,C2 and D. **Not** suitable for C5	
Balustrade Height (max)	Post Spacing (max)
1.1m	1.2m
1.3m	1.1m
1.5m	0.9m

Occupancy A, A other, B, E and C3 only	
Balustrade Height (max)	Post Spacing (max)
1.0m	1.4m
1.1m	1.3m
1.2m	1.2m
1.3m	1.1m
1.4m	1.0m
1.5m	0.9m

General Notes:
1 - Balustrade Height above Deck
2 - Maximum 60mm of spacers between base plate and structure including decking

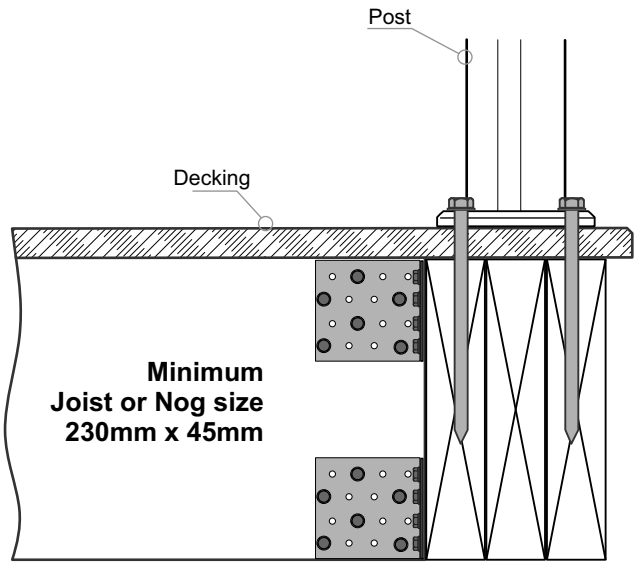

Important Installation notes:
1 - The Project Engineer must ensure the structure can support the appropriate loads
2 - Substructure shown indicatively only. Timber SG8 minimum strength
3 - Coachscrews 150mm engagement into joists. All coachscrews pre drill 6mm holes
4 - Bond all coachscrews with SIKA Supergrip to full depth
5 - All Fixings must be Stainless steel

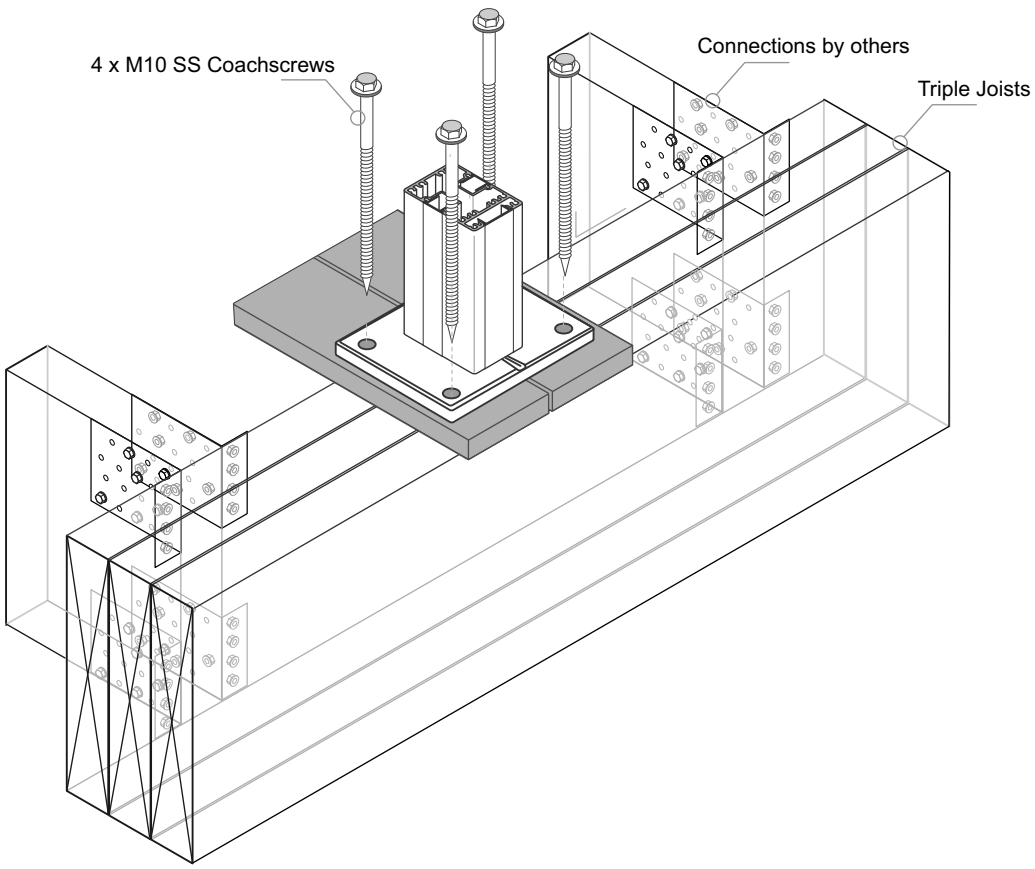

Juralco Edgetec® Commercial C3 Balustrade System - Typical Post Fixings
Complies with NZS3604:2011 - Triple Boundary Joists, Exposed Deck

Typical TOP Fix to Timber - JET 221, 150mm x 127mm, 4 hole Base Plate - M10 SS Threaded Rod or Bolts

Up to and including Extra High Wind Zone

Occupancy C1,C2 and D. **Not** suitable for C5	
Balustrade Height (max)	Post Spacing (max)
1.1m	1.2m
1.3m	1.1m
1.5m	0.9m

Occupancy A, A other, B, E and C3 only	
Balustrade Height (max)	Post Spacing (max)
1.0m	1.4m
1.1m	1.3m
1.2m	1.2m
1.3m	1.1m
1.4m	1.0m
1.5m	0.9m

General Notes:
1 - Balustrade Height above Deck

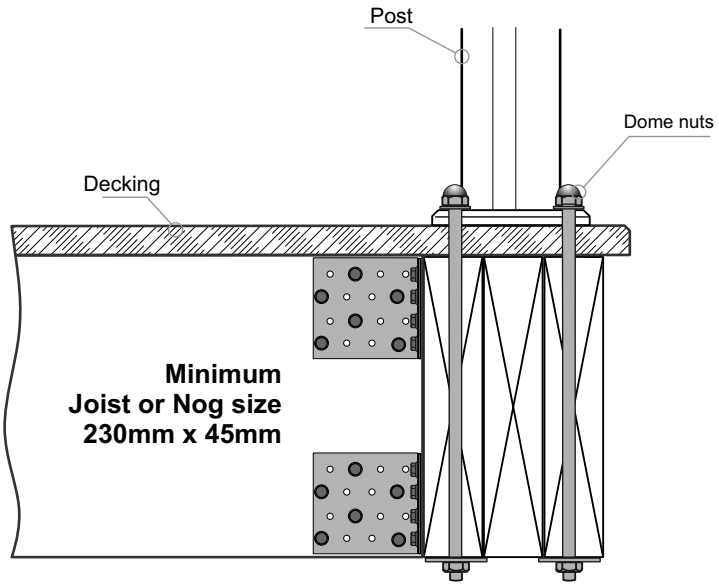

Important Installation Notes:
1 - The Project Engineer must ensure the structure can support the appropriate loads
2 - Substructure shown indicatively only. Timber SG8 minimum strength
3 - All fixings must be Stainless Steel

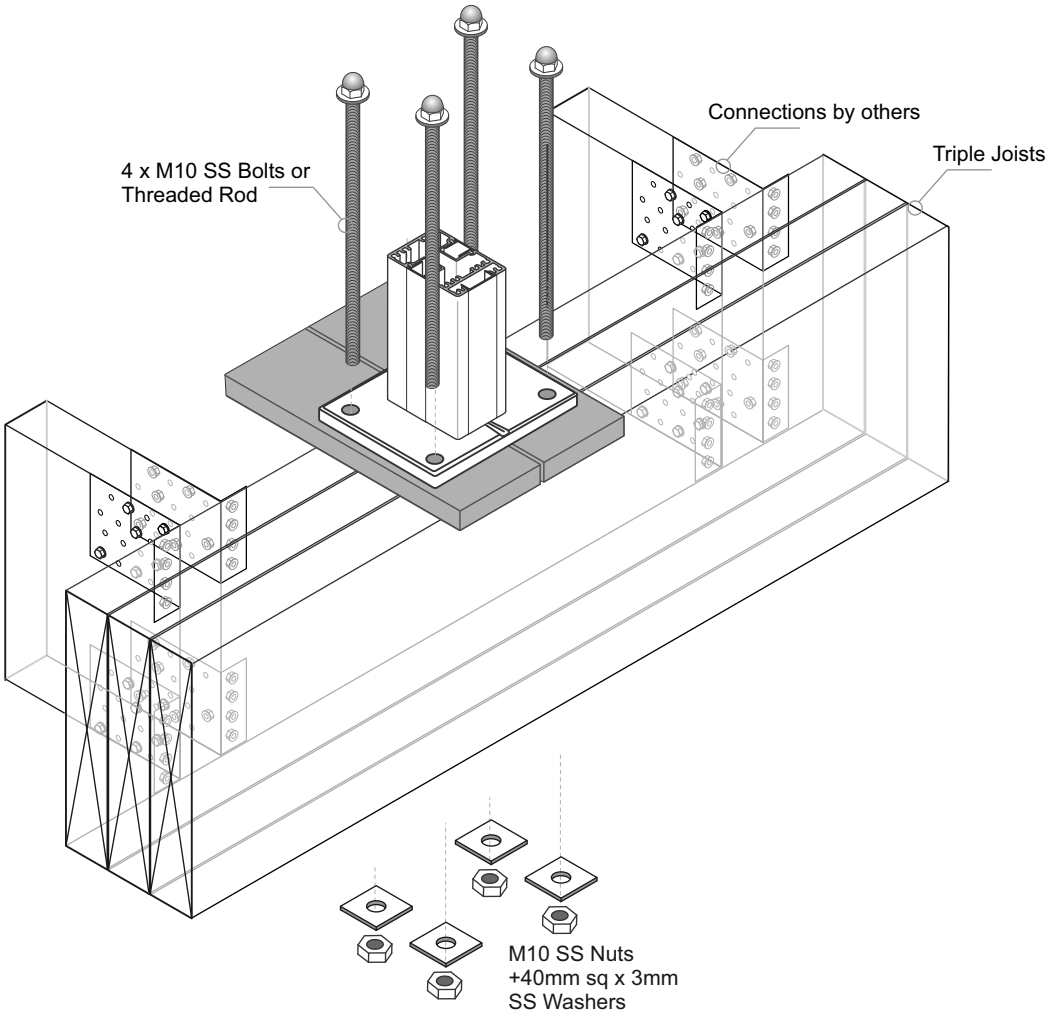

Juralco Edgetec® Commercial C3 Balustrade System - Typical Post Fixings
Complies with NZS3604:2011 - Triple Boundary Joists, Exposed Deck

Typical FACE Fix Post to Timber - M10 SS Coachscrews

Up to and including Extra High Wind Zone

Occupancy C1,C2 and D. **Not** suitable for C5		Occupancy A, A other, B, E and C3 only	
Balustrade Height (max)	Post Spacing (max)	Balustrade Height (max)	Post Spacing (max)
1.1m	1.2m	1.0m	1.4m
1.3m	1.1m	1.1m	1.3m
1.5m	0.9m	1.2m	1.2m
		1.3m	1.1m
		1.4m	1.0m
		1.5m	0.9m

General Notes:
1 - Balustrade Height above Deck
2 - Maximum 60mm JVB125 spacer and/or full bearing timber or stronger packers

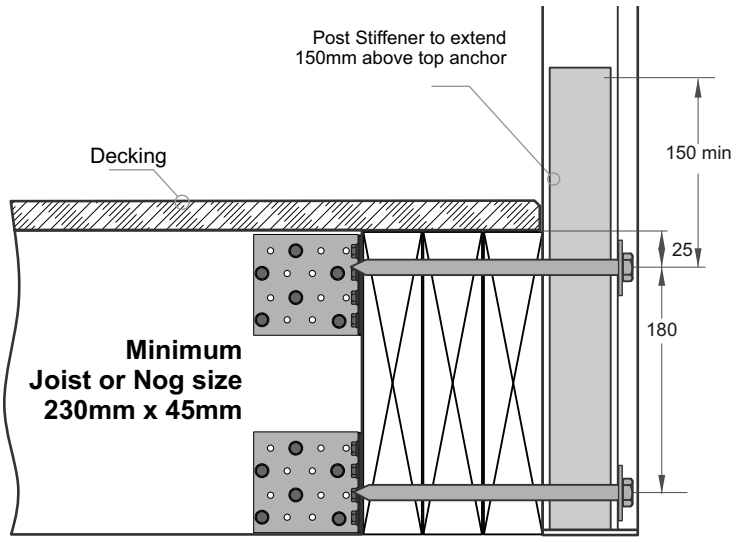

Important Installation notes:
1 - The Project Engineer must ensure the structure can support the appropriate loads
2 - Substructure shown indicatively only. Timber SG8 minimum strength
3 - Coachscrews 130mm engagement into joists. All coachscrews pre drill 6mm holes
4 - Bond all coachscrews with SIKA Supergrip to full depth
5 - All Fixings must be Stainless steel

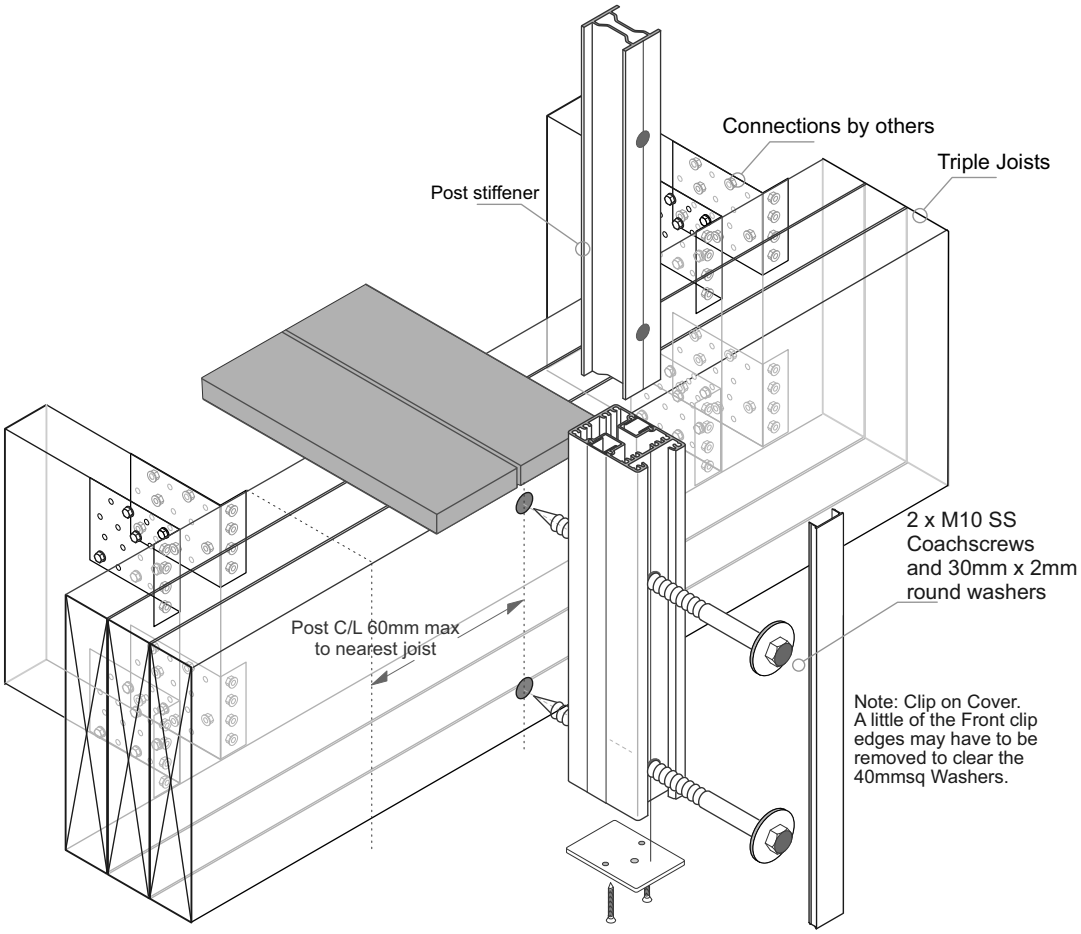

Juralco Edgetec® Commercial C3 Balustrade System - Typical Post Fixings
Complies with NZS3604:2011 - Triple Boundary Joists, Exposed Deck

Typical FACE Fix Post to Timber - M10 SS Threaded Rod or Bolts

Up to and including Extra High Wind Zone

Occupancy C1,C2 and D. **Not** suitable for C5		Occupancy A, A other, B, E and C3 only	
Balustrade Height (max)	Post Spacing (max)	Balustrade Height (max)	Post Spacing (max)
1.1m	1.2m	1.0m	1.4m
1.3m	1.1m	1.1m	1.3m
1.5m	0.9m	1.2m	1.2m
		1.3m	1.1m
		1.4m	1.0m
		1.5m	0.9m

General Notes:
1 - Balustrade Height above Deck
2 - Maximum 60mm JVB125 spacer and/or full bearing timber or stronger packers

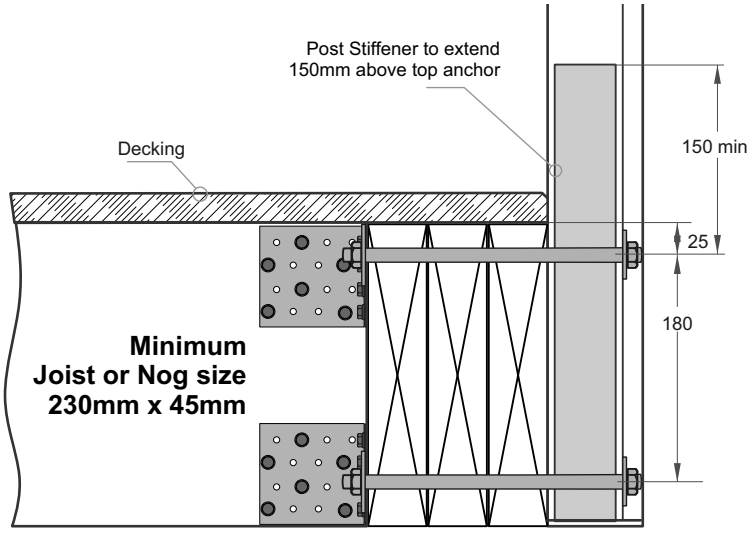

Important Installation Notes:
1 - The Project Engineer must ensure the structure can support the appropriate loads
2 - Substructure shown indicatively only.Timber SG8 minimum strength
3 - All fixings must be Stainless Steel

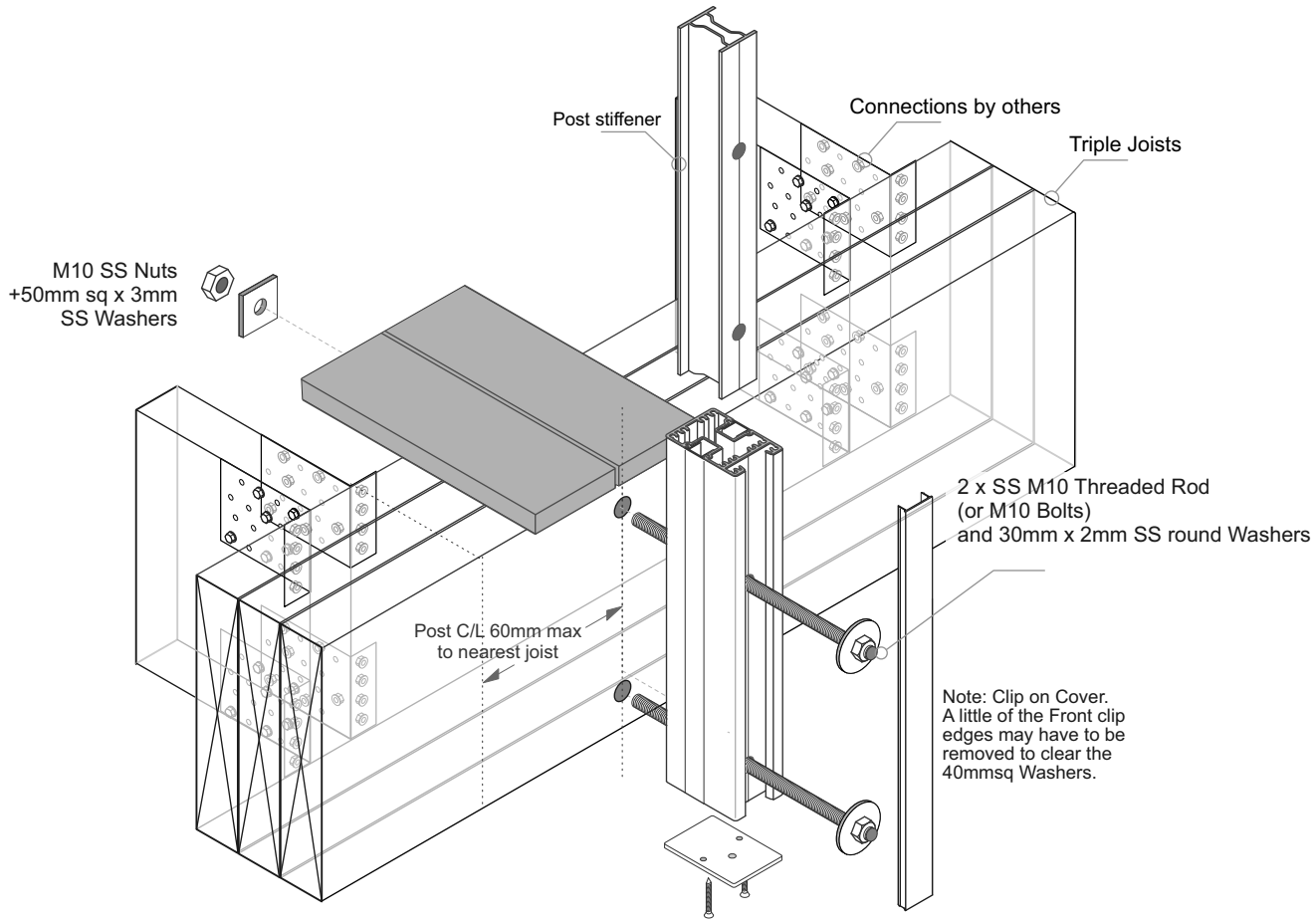

Juralco Edgetec® Commercial C3 Balustrade System - Typical Post Fixings
Complies with NZS3604:2011 - Triple Boundary Joists, Exposed Deck

Typical FACE Fix Post to Timber - M10 SS Coachscrews and Spacers

Up to and including Extra High Wind Zone

Occupancy C1,C2 and D. **Not** suitable for C5		Occupancy A, A other, B, E and C3 only	
Balustrade Height (max)	Post Spacing (max)	Balustrade Height (max)	Post Spacing (max)
1.1m	1.2m	1.0m	1.4m
1.3m	1.1m	1.1m	1.3m
1.5m	0.9m	1.2m	1.2m
		1.3m	1.1m
		1.4m	1.0m
		1.5m	0.9m

General Notes:
1 - Balustrade Height above Deck
2 - Maximum 60mm JVB125 spacer and/or full bearing timber or stronger packers

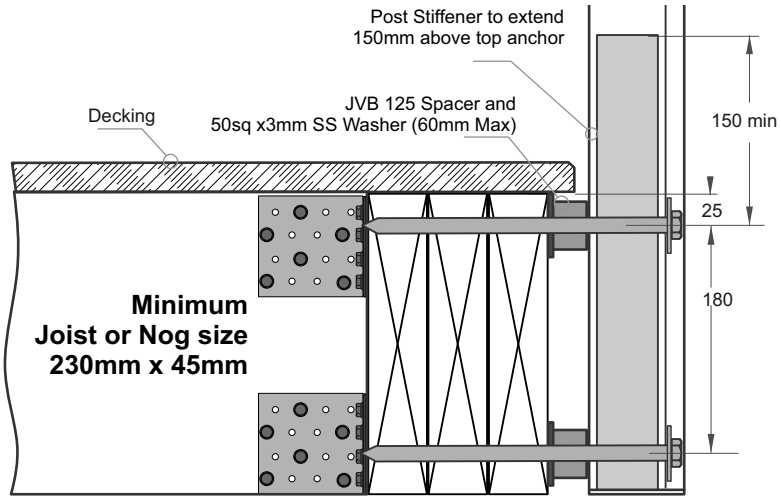

Important Installation notes:
1 - The Project Engineer must ensure the structure can support the appropriate loads
2 - Substructure shown indicatively only. Timber SG8 minimum strength
3 - Coachscrews 130mm engagement into joists. All coachscrews pre drill 6mm holes
4 - Bond all coachscrews with SIKA Supergrip to full depth
5 - All Fixings must be Stainless steel

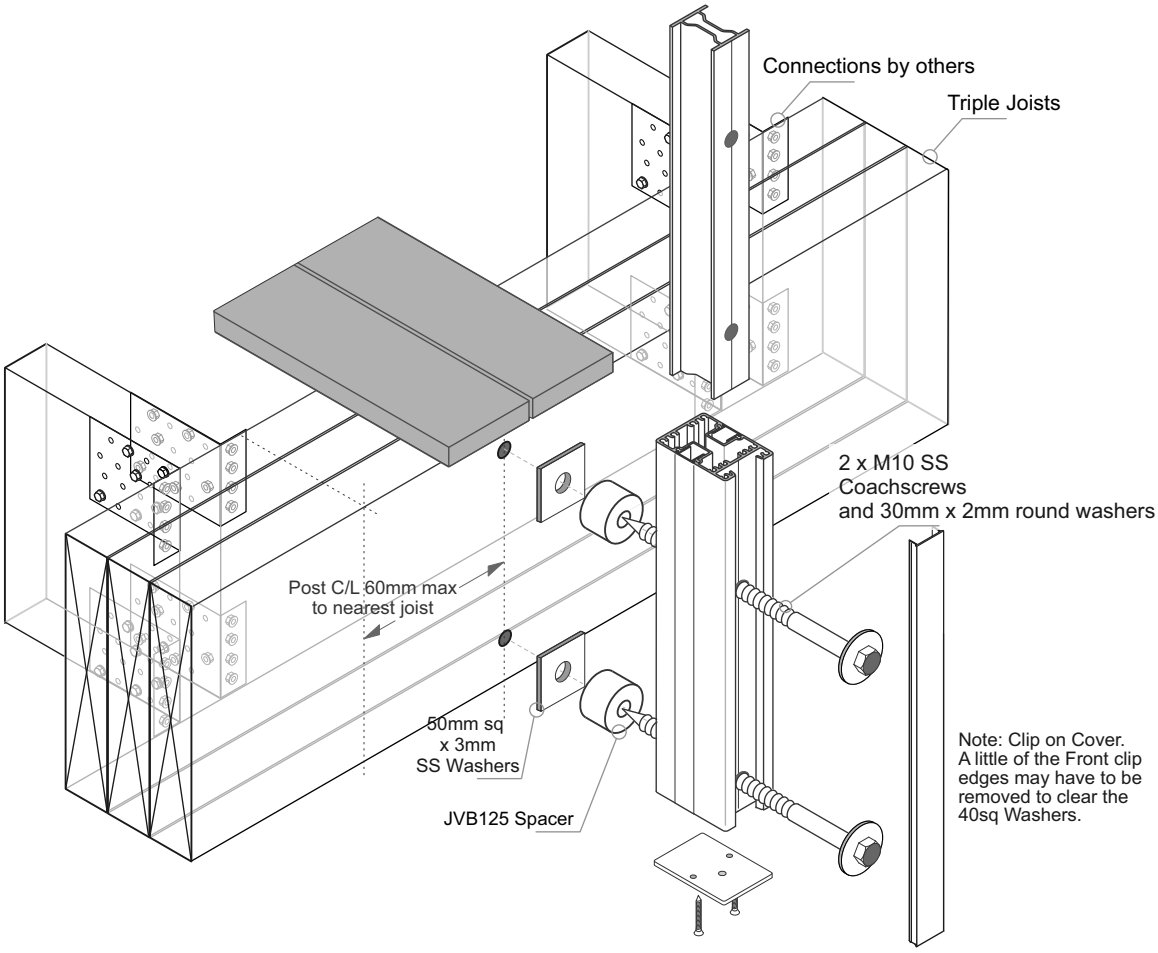

Typical TOP Fix to Timber/Steel - JET 221, 150mm x 127mm, 4 hole Base Plate - M10 SS Bolts

Up to and including Extra High Wind Zone

Occupancy C1,C2 and D. **Not** suitable for C5	
Balustrade Height (max)	Post Spacing (max)
1.1m	1.2m
1.3m	1.1m
1.5m	0.9m

Occupancy A, A other, B, E and C3 only	
Balustrade Height (max)	Post Spacing (max)
1.0m	1.4m
1.1m	1.3m
1.2m	1.2m
1.3m	1.1m
1.4m	1.0m
1.5m	0.9m

General Notes:
1 - Balustrade Height above Deck

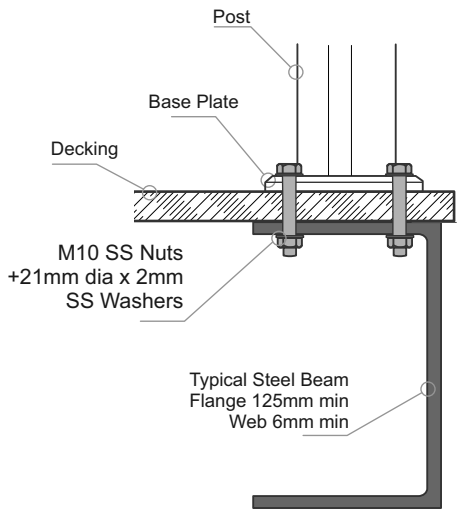

Important Installation Notes:
1 - The Project Engineer must ensure the structure can support the appropriate loads
2 - Deck SG8 minimum strength. Substructure shown indicatively only
2 - All fixings must be Stainless Steel

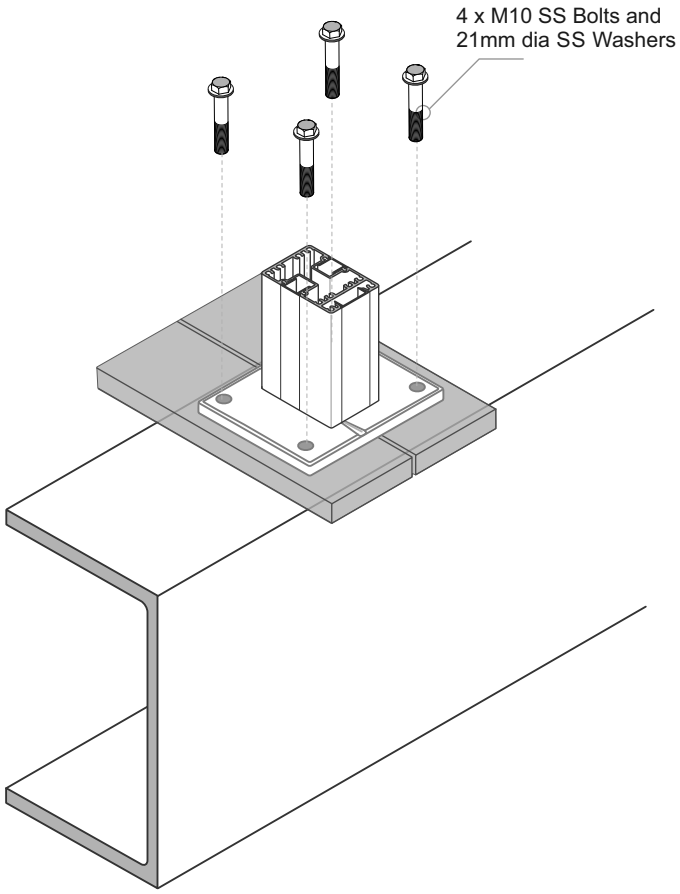

Typical TOP Fix Directly to Steel - JET 201, 150mm x 100mm, 2 hole Base Plate - M12 SS Bolts

Up to and including Extra High Wind Zone

Occupancy C1,C2 and D. **Not** suitable for C5	
Balustrade Height (max)	Post Spacing (max)
1.1m	1.0m
1.2m	0.9m
1.3m	0.8m

Occupancy A, A other, B, E and C3 only	
Balustrade Height (max)	Post Spacing (max)
1.0m	1.4m
1.1m	1.3m
1.2m	1.2m
1.3m	1.1m
1.4m	1.0m
1.5m	0.9m

General Notes:
1 - Balustrade Height above Deck

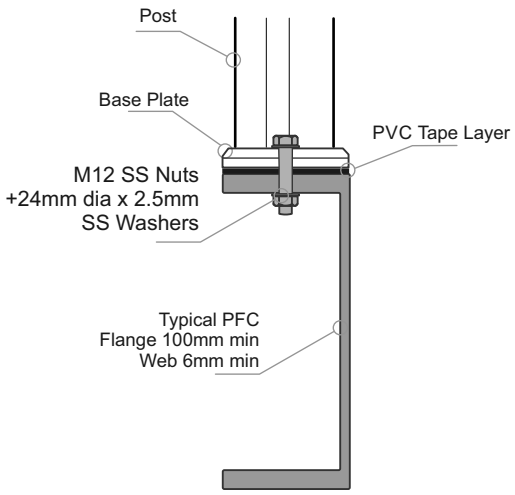

Important Installation Notes:
1 - The Project Engineer must ensure the structure can support the appropriate loads
2 - Substructure shown indicatively only.
3 - A PVC Tape layer must be installed between the Baseplate and Steel
4 - All fixings must be Stainless Steel

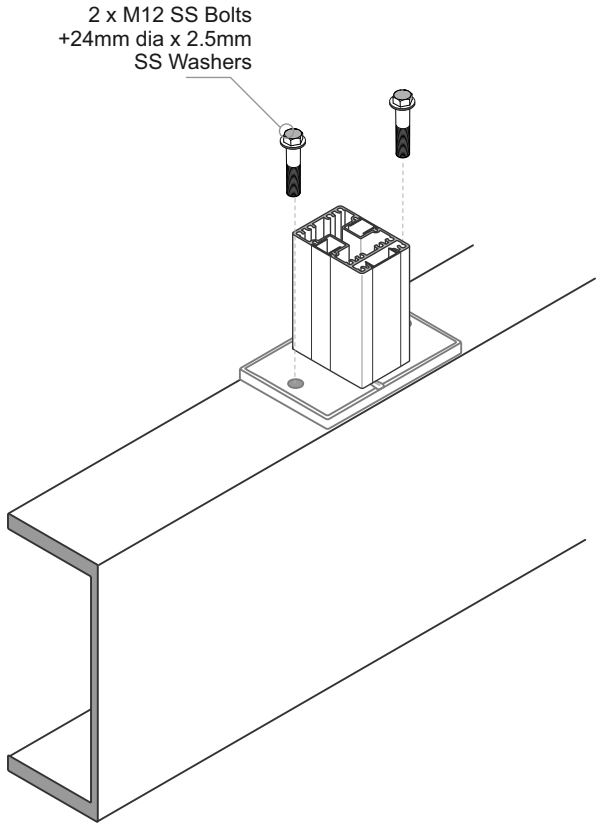

Typical FACE Fix Post to Steel - M10 SS Bolts

Up to and including Extra High Wind Zone

Occupancy C1,C2 and D. **Not** suitable for C5		Occupancy A, A other, B, E and C3 only	
Balustrade Height (max)	Post Spacing (max)	Balustrade Height (max)	Post Spacing (max)
1.1m	1.2m	1.0m	1.4m
1.3m	1.1m	1.1m	1.3m
1.5m	0.9m	1.2m	1.2m
		1.3m	1.1m
		1.4m	1.0m
		1.5m	0.9m

General Notes:
1 - Balustrade Height above Deck
2 - Maximum 60mm JVB125 spacer and/or full bearing timber or stronger packers

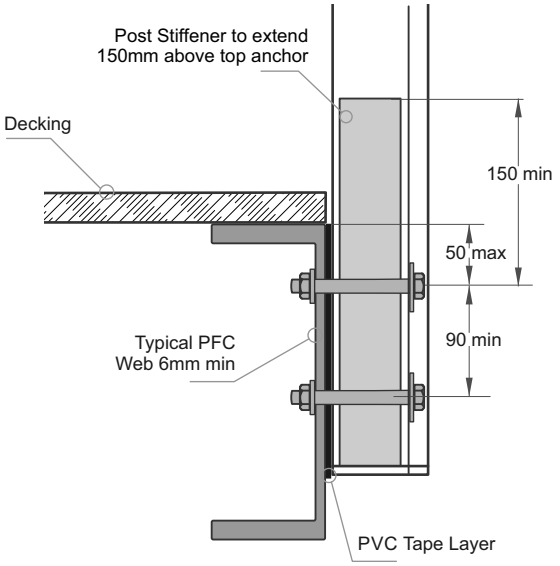

Important Installation Notes:
1 - The Project Engineer must ensure the structure can support the appropriate loads
2 - Substructure shown indicatively only
3 - A PVC Tape layer must be installed between the Post and Steel
4 - All fixings must be Stainless Steel

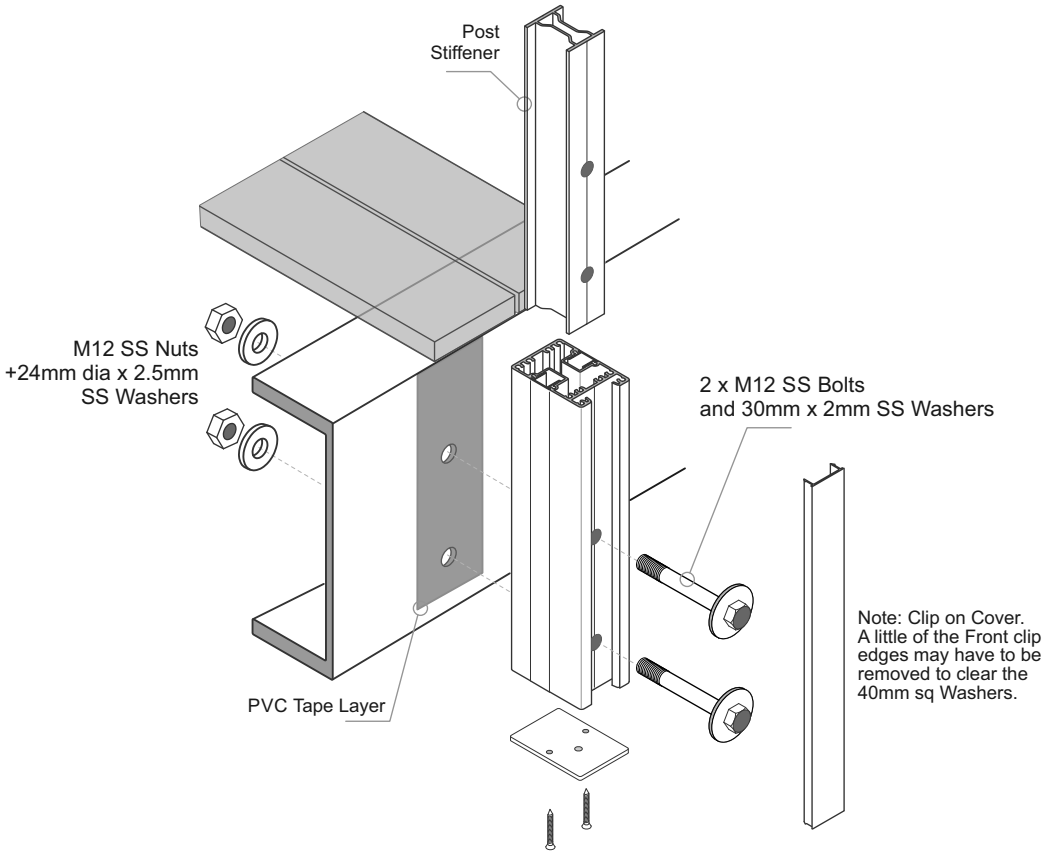

Typical FACE Fix Post to Steel + Wooden Packers - M10 SS Bolts

Up to and including Extra High Wind Zone

Occupancy C1,C2 and D. **Not** suitable for C5		Occupancy A, A other, B, E and C3 only	
Balustrade Height (max)	Post Spacing (max)	Balustrade Height (max)	Post Spacing (max)
1.1m	1.2m	1.0m	1.4m
1.3m	1.1m	1.1m	1.3m
1.5m	0.9m	1.2m	1.2m
		1.3m	1.1m
		1.4m	1.0m
		1.5m	0.9m

General Notes:
1 - Balustrade Height above Deck
2 - Maximum 60mm JVB125 spacer and/or full bearing timber or stronger packers

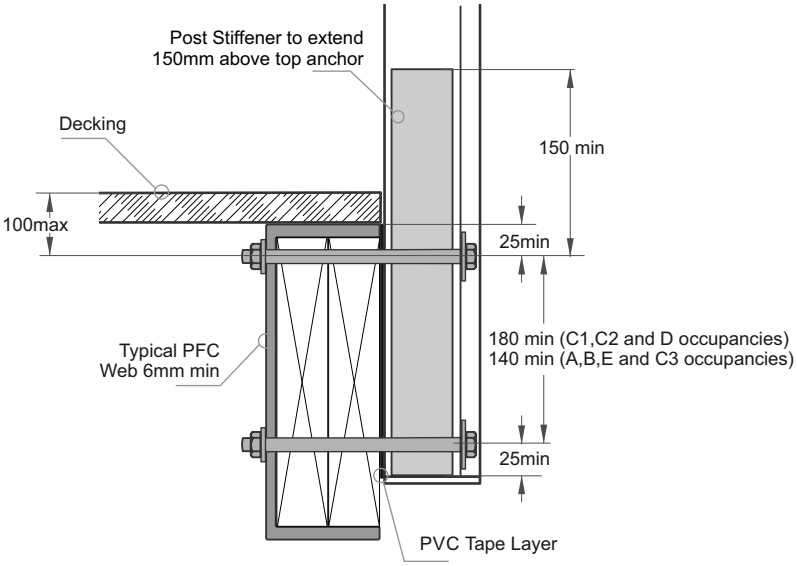

Important Installation Notes:
1 - The Project Engineer must ensure the structure can support the appropriate loads
2 - Substructure shown indicatively only. Timber SG8 minimum strength
3 - A PVC Tape layer must be installed between the Baseplate and Steel Flange
4 - The Post must bear evenly against the Timber/Steel face
5 - All fixings must be Stainless Steel

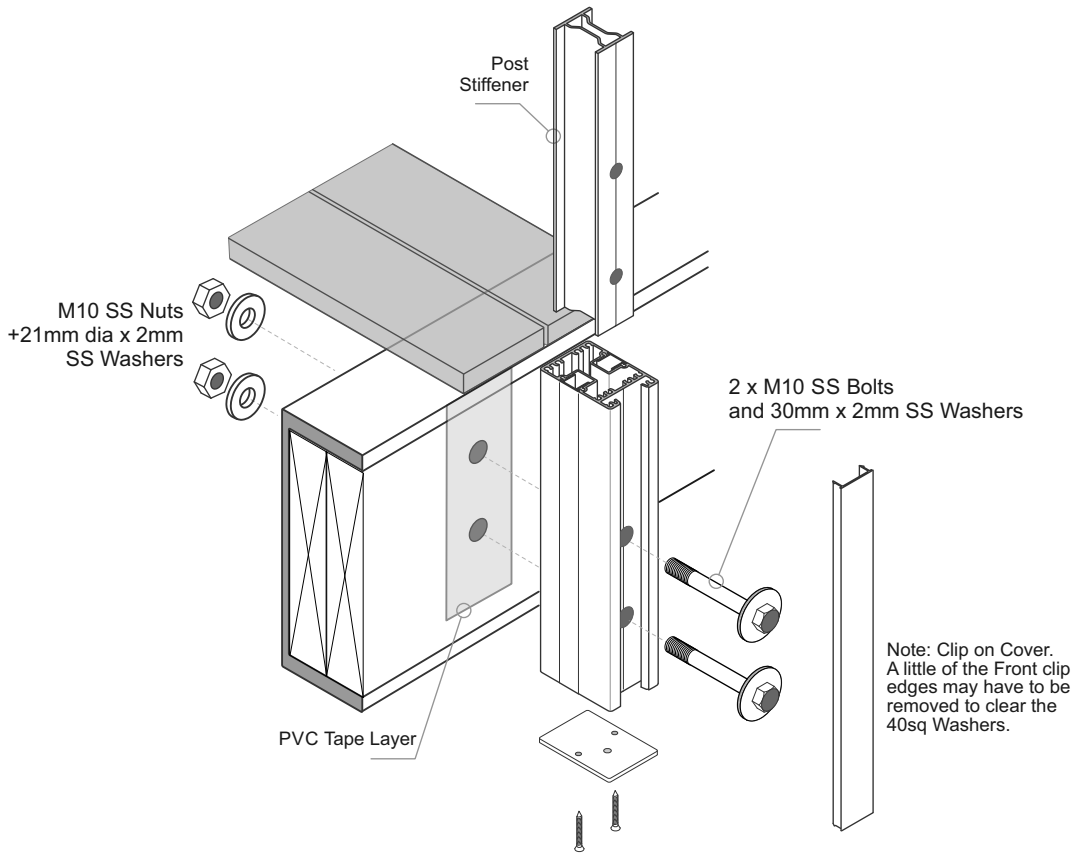

Typical TOP Fix to Concrete - JET 201, 150mm x 100mm, 2 hole Base Plate - M12 SS Studs

Up to and including Extra High Wind Zone

Occupancy A, A other, B, E and C3 only	
Balustrade Height (max)	Post Spacing (max)
1.0m	0.95m
1.1m	0.8m
1.2m	0.65m

Occupancy A, A other, B, E and C3 only	
Balustrade Height (max)	Post Spacing (max)
1.0m	1.05m
1.1m	0.9m
1.2m	0.75m

Uncracked Concrete	Cracked Concrete
CT = 150mm min	CT = 200mm min
AD = 90mm	AD = 170mm
DD =100mm	DD = 180mm
ED = 120mm	ED = 120mm

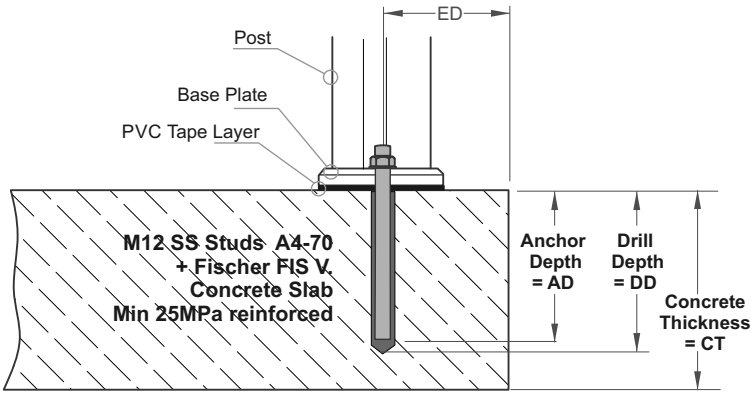

General Notes:
1 - Balustrade Height above Deck



Installation details Fischer FIS V 300T

Thread diameter	M12
Drill hole diameter	= 14 mm
Drill hole depth	= See table above
Anchorage depth	= see Table above
Drilling method	Hammer drilling
Drill hole cleaning	4 times blowing, 4 times brushing, 4 times blowing

No borehole cleaning required in case of using a hollow drill bit, e.g. fischer FHD.

Important Installation Notes:
1 - The Project Engineer must ensure the structure can support the appropriate loads
2 - Substructure shown indicatively only
3 - Fixings must engage into the structural slab
4 - A PVC Tape layer must be installed between the Baseplate and Concrete
5 - Use Threadlok on Nuts
6 - All fixings must be Stainless Steel

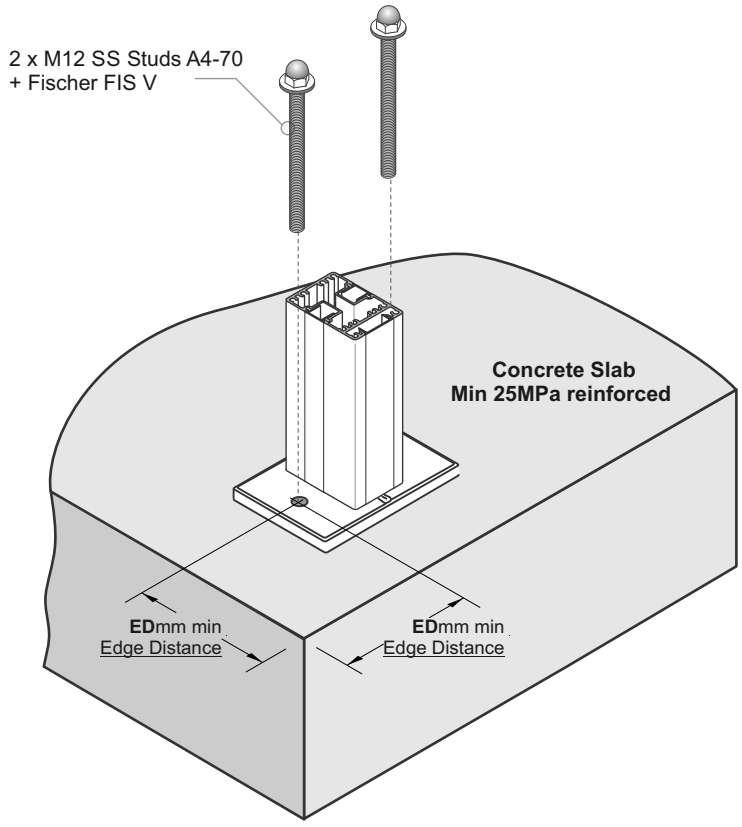

Typical TOP Fix to Concrete - JET 221, 150mm x 127mm, 4 hole Base Plate - M10 SS Studs

Up to and including Extra High Wind Zone

Occupancy C1,C2 and D. **Not** suitable for C5	
Balustrade Height (max)	Post Spacing (max)
1.1m	1.1m
1.3m	1.0m
1.5m	0.9m

Occupancy A, A other, B, E and C3 only	
Balustrade Height (max)	Post Spacing (max)
1.0m	1.4m
1.1m	1.3m
1.2m	1.2m
1.3m	1.1m
1.4m	1.0m
1.5m	0.9m

Uncracked Concrete	Cracked Concrete
CT = 150mm min AD = 90mm DD =100mm	CT = 200mm min AD = 170mm DD = 180mm

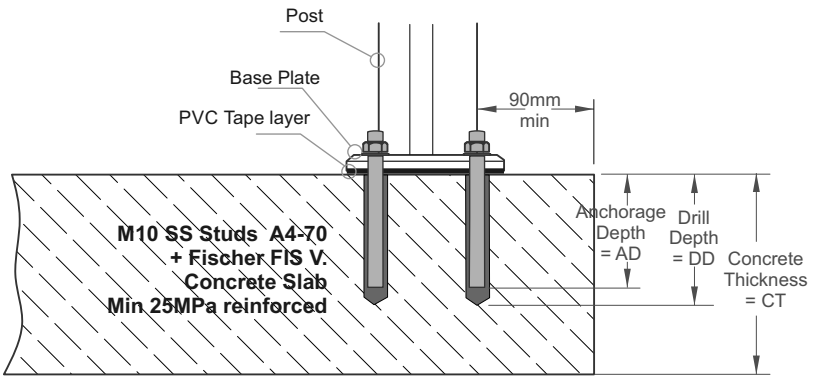

General Notes:
1 - Balustrade Height above Deck
2 - Maximum 60mm of spacers between base plate and structure including decking



Installation details Fischer FIS V 300T

Thread diameter	M10
Drill hole diameter	= 12 mm
Drill hole depth	= See Table Above
Anchorage depth	= See Table Above
Drilling method	Hammer drilling
Drill hole cleaning	4 times blowing, 4 times brushing, 4 times blowing

No borehole cleaning required in case of using a hollow drill bit, e.g. fischer FHD.

Important Installation Notes:
1 - The Project Engineer must ensure the structure can support the appropriate loads
2 - Substructure shown indicatively only
3 - Fixings must engage into the structural slab
4 - A PVC Tape layer must be installed between the Baseplate and Concrete
5 - Use Threadlok on Nuts
6 - All fixings must be Stainless Steel

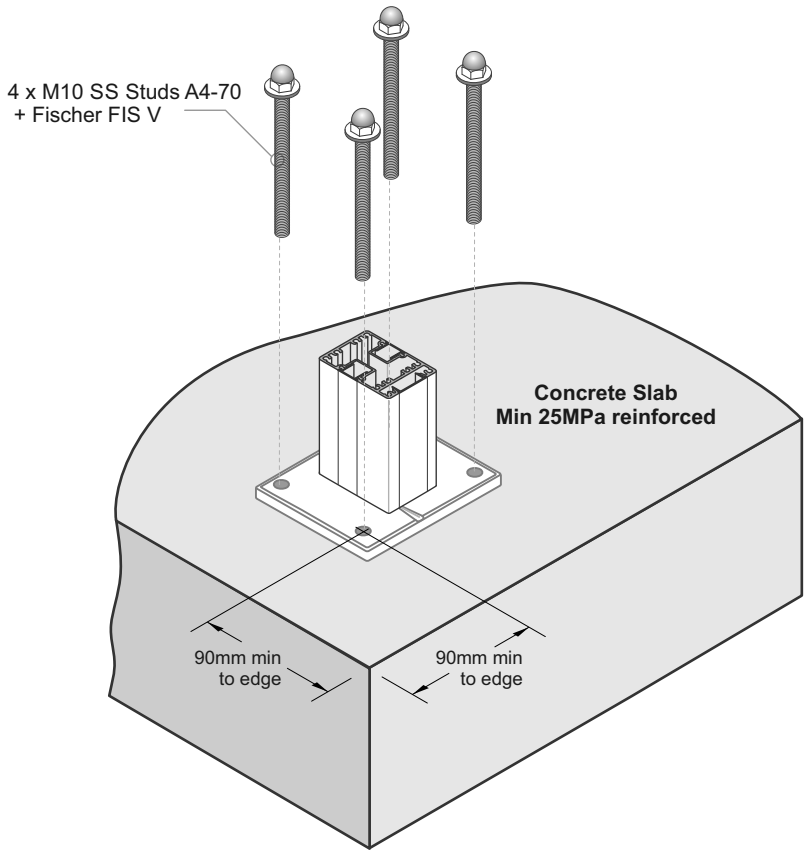

Typical TOP Fix to Concrete - Embed Post in Concrete Slab

Up to and including Extra High Wind Zone

Occupancy C1,C2 and D. **Not** suitable for C5	
Balustrade Height (max)	Post Spacing (max)
1.1m	1.1m
1.3m	1.0m
1.5m	0.8m

Occupancy A, A other, B, E and C3 only	
Balustrade Height (max)	Post Spacing (max)
1.0m	1.4m
1.1m	1.3m
1.2m	1.2m
1.3m	1.1m

General Notes:
1 - Balustrade Height, above Deck
2- Only suitable for Ground level sites (not elevated)

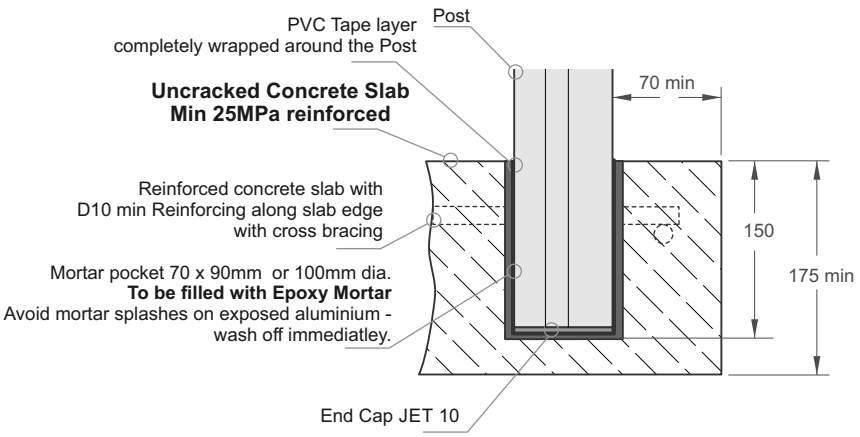

Important Installation Notes:
1 - The Project Engineer must ensure the structure can support the appropriate loads
2 - Substructure shown indicatively only
3 - A complete PVC Tape layer must be installed between the Post and Concrete slab
4 - Only suitable for Ground level sites (not elevated)

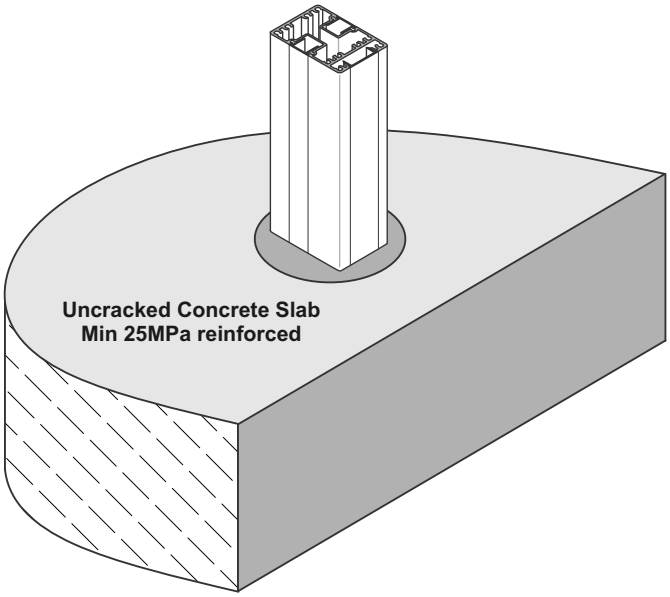

Typical FACE Fix Post to Concrete - M10 SS Studs

Up to and including Extra High Wind Zone

Occupancy C1,C2 and D. **Not** suitable for C5	
Balustrade Height (max)	Post Spacing (max)
1.1m	1.1m
1.3m	1.0m
1.5m	0.9m

Occupancy A, A other, B, E and C3 only	
Balustrade Height (max)	Post Spacing (max)
1.0m	1.4m
1.1m	1.3m
1.2m	1.2m
1.3m	1.1m
1.4m	1.0m
1.5m	0.9m

Stud Depth	
Occupancy	Depth
A, A other, B, E and C3	150
C1, C2 and D	190

Uncracked Concrete	Cracked Concrete
CT = 210mm min	CT = 250mm min
AVC = 110mm min	AVC = 160mm min
AD = 200mm	AD = 180mm
DD = 210mm	DD = 190mm

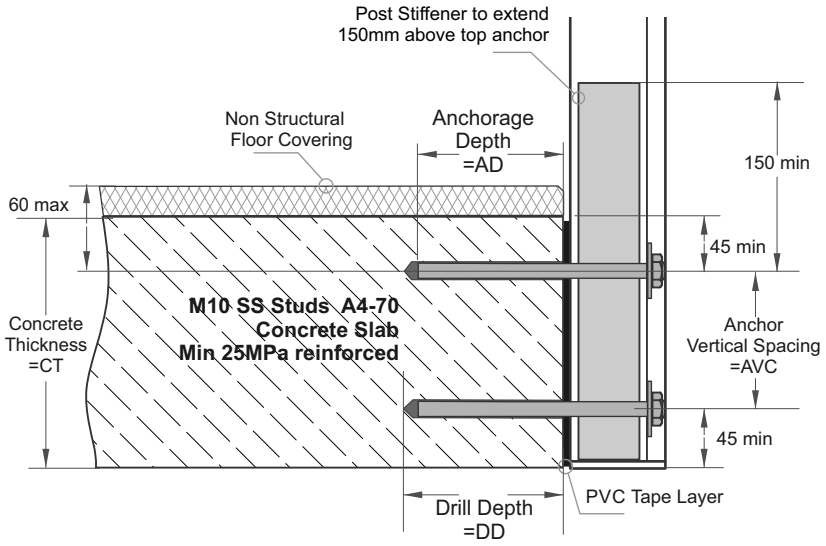

General Notes:
1 - Balustrade Height, above Deck
2 - Maximum 60mm JVB125 spacer and/or full bearing timber or stronger packers



Installation details Hilti HIT-RE 500 V4

Thread diameter	M10
Drill hole diameter	= 12 mm
Drill hole depth	= See table above
Anchorage depth	= See table above
Drilling method	Hammer drilling
Drill hole cleaning	4 times blowing, 4 times brushing, 4 times blowing

No borehole cleaning required in case of using a hollow drill bit.

Important Installation Notes:
1 - The Project Engineer must ensure the structure can support the appropriate loads
2 - Substructure shown indicatively only
3 - Fixings must engage into the structural slab
4 - A PVC Tape layer must be installed between the Post and Concrete
5 - Use Threadlok on Nuts
6 - All fixings must be Stainless Steel

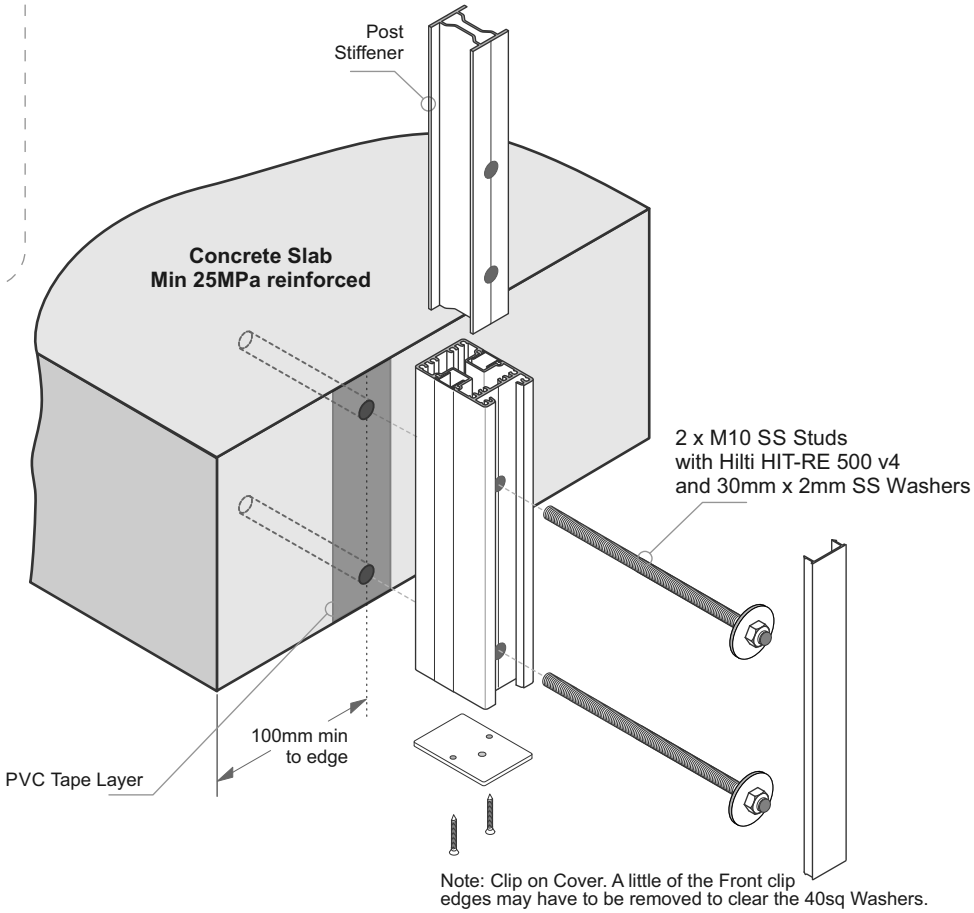

Note: Clip on Cover. A little of the Front clip edges may have to be removed to clear the 40sq Washers.

Juralco Edgetec® Commercial C3 Balustrade System
Toughened Glass_ Panels - Hand Rail, Post and Glass Offsets

Glass
Handrail - Offsets

For 10mm or 12mm Toughened Glass
Applies to Layouts 1, 2 ,3, 4

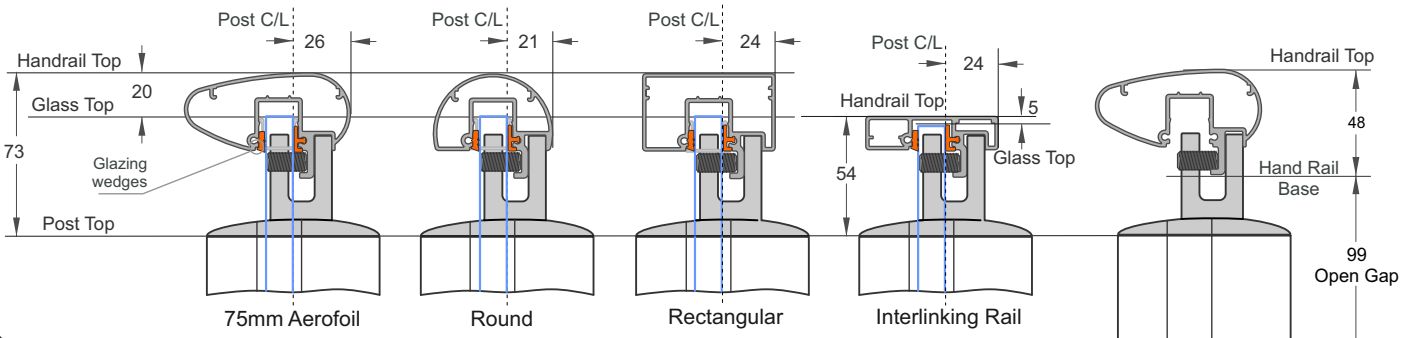

Glass.
Post - Offsets, With Bottom Rail

For 10mm Toughened Glass
Applies to Layouts 1 and 2

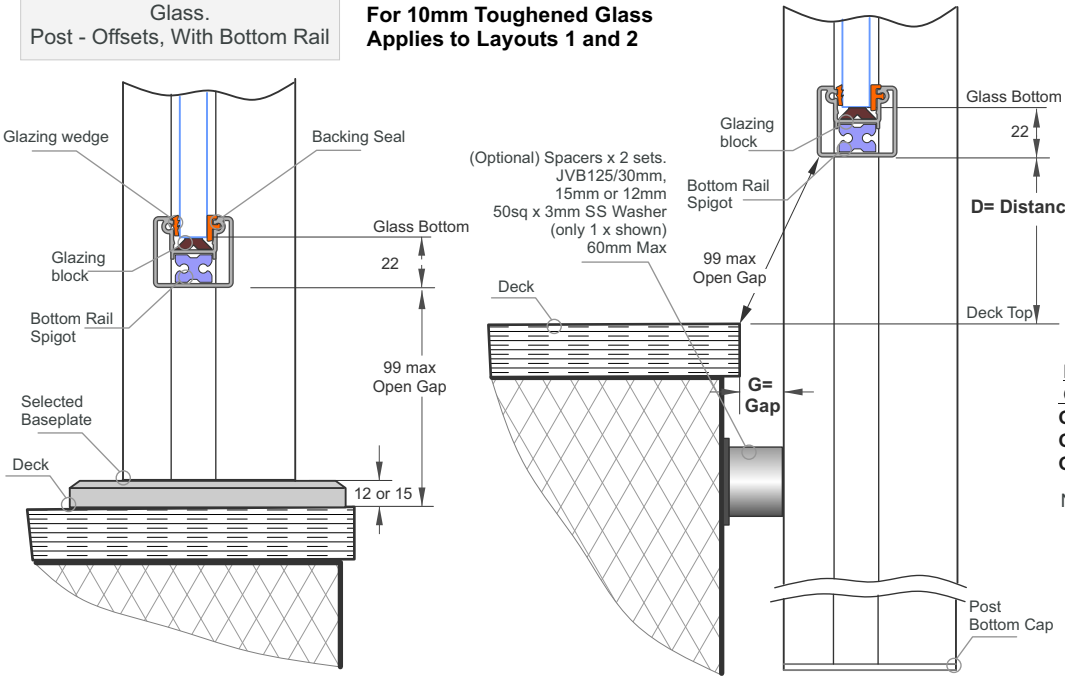

D max values for a 99mm Opening to the deck
G Gap = 10mm, D = 96mm
G Gap = 20mm, D = 93mm
G Gap = 30mm, D = 88mm

Note - Because the Bottom Rail is mounted forward of the Deck Edge, the **D** Dimension is no longer 99mm.

Glass.
Post - Offsets, No Bottom Rail

For 12mm Toughened Glass
Applies to Layout 3 only

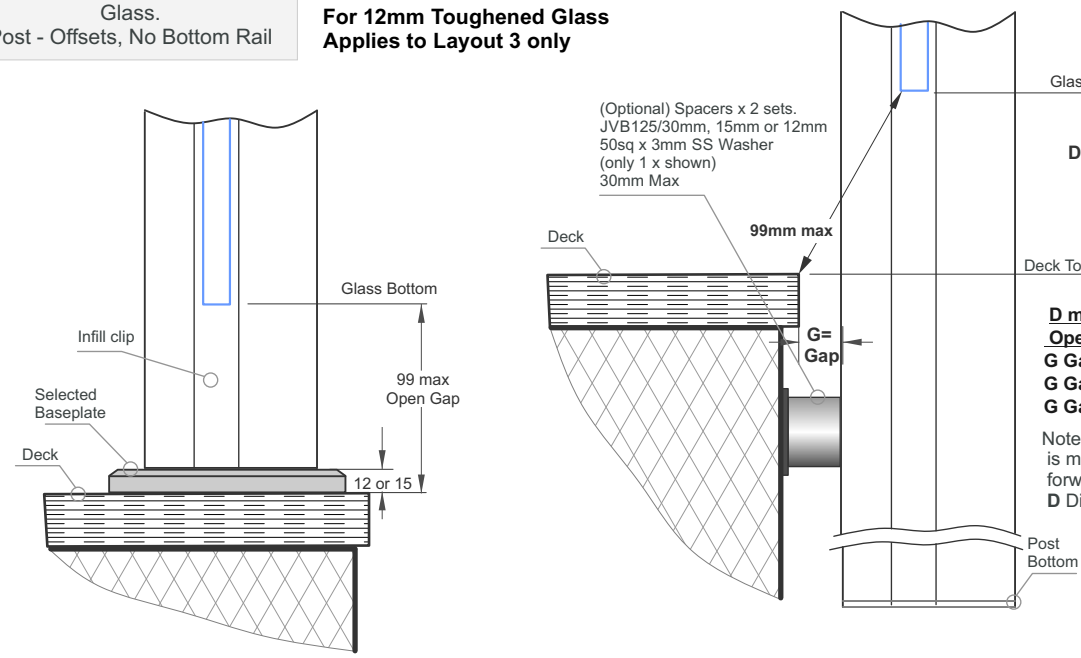

D max values for a 99mm Opening to the deck
G Gap = 10mm, D = 92mm
G Gap = 20mm, D = 87mm
G Gap = 30mm, D = 81mm

Note - Because the Glass Bottom is mounted forward of the Deck Edge, the **D** Dimension is no longer 99mm.

Glass
Handrail - Offsets

For 15mm Toughened Glass
Applies to Layout 4

Note - See later pages for more details and components

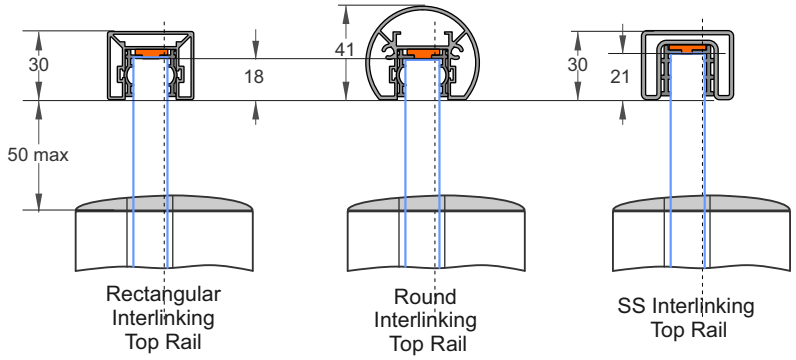

Glass
Handrail - Offsets

For 15mm Toughened Glass
Applies to Layout 5

Suitable Handrails

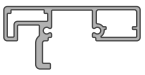
Interlinking Rail
JEB/222/5.8

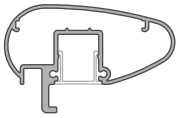
75mm Aerofoil Handrail
JEB/217/5.8

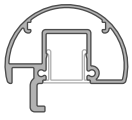
Round Handrail
JEB/209/5.8

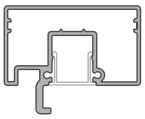
Rectangular Handrail
JEB/216/5.8

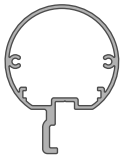
Circular Handrail
JEB/221/5.8

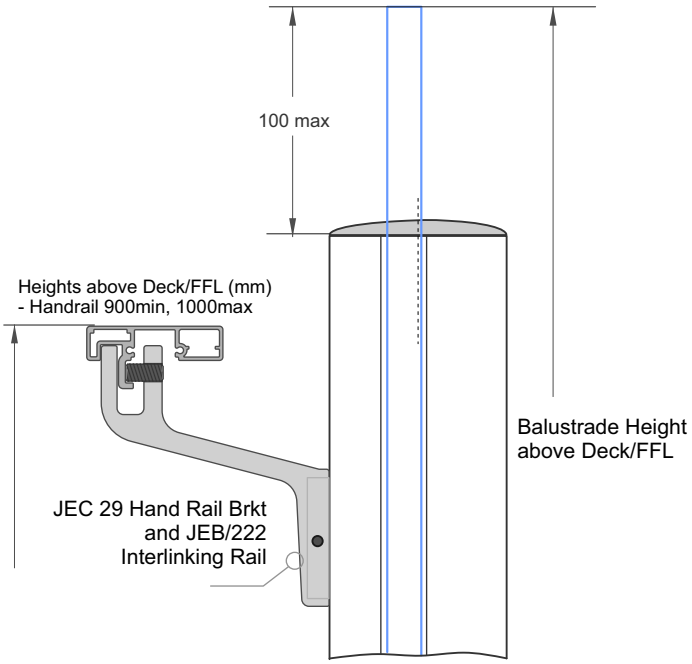

Glass.
Post - Offsets, No Bottom Rail

For 15mm Toughened Glass
Applies to Layouts 4 and 5

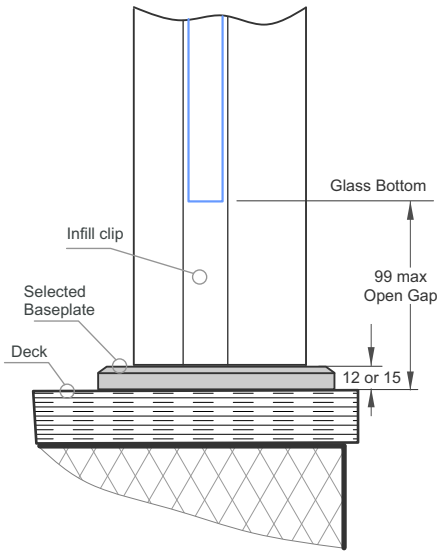

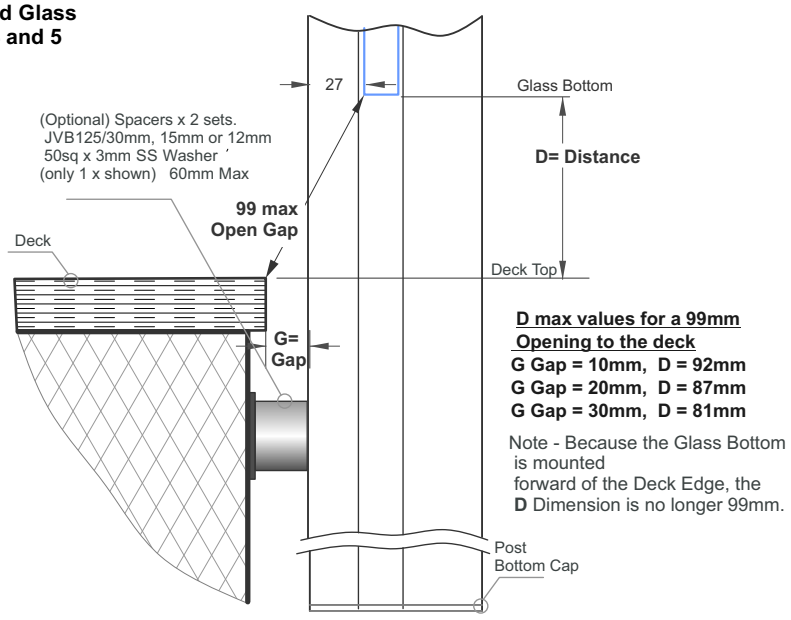

D max values for a 99mm Opening to the deck
G Gap = 10mm, D = 92mm
G Gap = 20mm, D = 87mm
G Gap = 30mm, D = 81mm

Note - Because the Glass Bottom is mounted forward of the Deck Edge, the **D** Dimension is no longer 99mm.

Metal Balusters
Handrail - Offsets

For 17mm Baluster JVB/005/5.3
Applies to Layouts 6 and 9

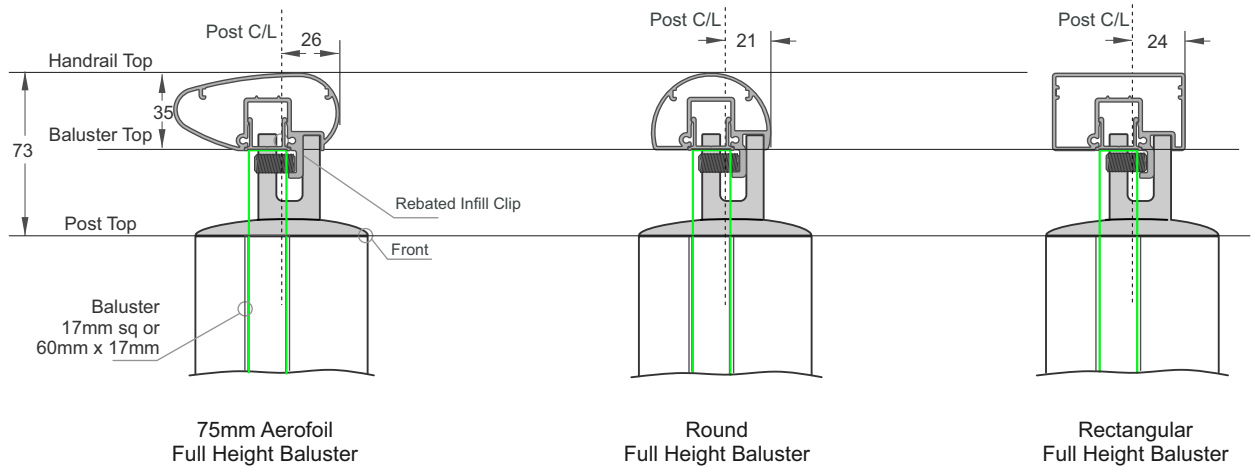

75mm Aerofoil
Full Height Baluster

Round
Full Height Baluster

Rectangular
Full Height Baluster

Metal Balusters
Handrail - Offsets

For 17mm Baluster JVB/005/5.3
Applies to Layouts 7 and 10

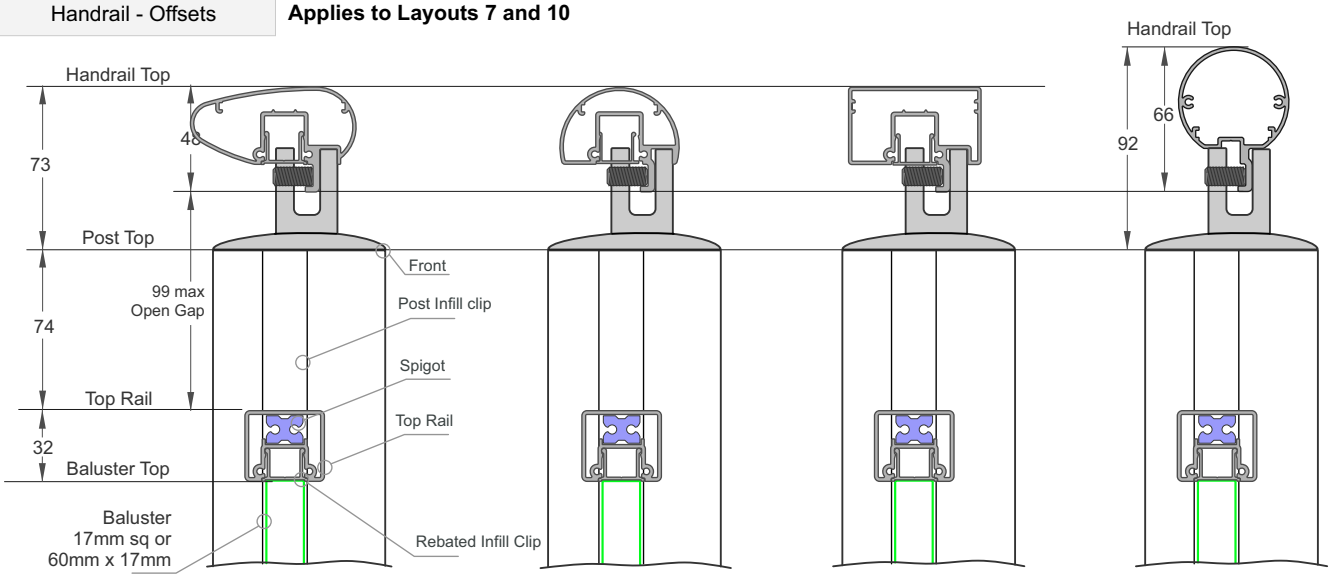

75mm Aerofoil
Split Rail Baluster

Round
Split Rail Baluster

Rectangular
Split Rail Baluster

Circular
Split Rail Baluster

17mm Baluster Attach Details

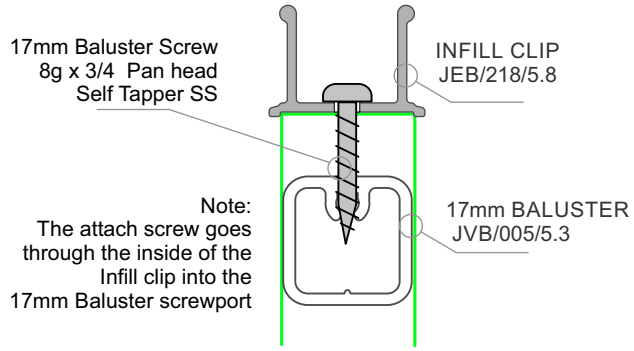

Metal Balusters
Handrail - Offsets

For 19mm Baluster JET/905/5.8
Split Rail Layout only
Applies to Layout 8

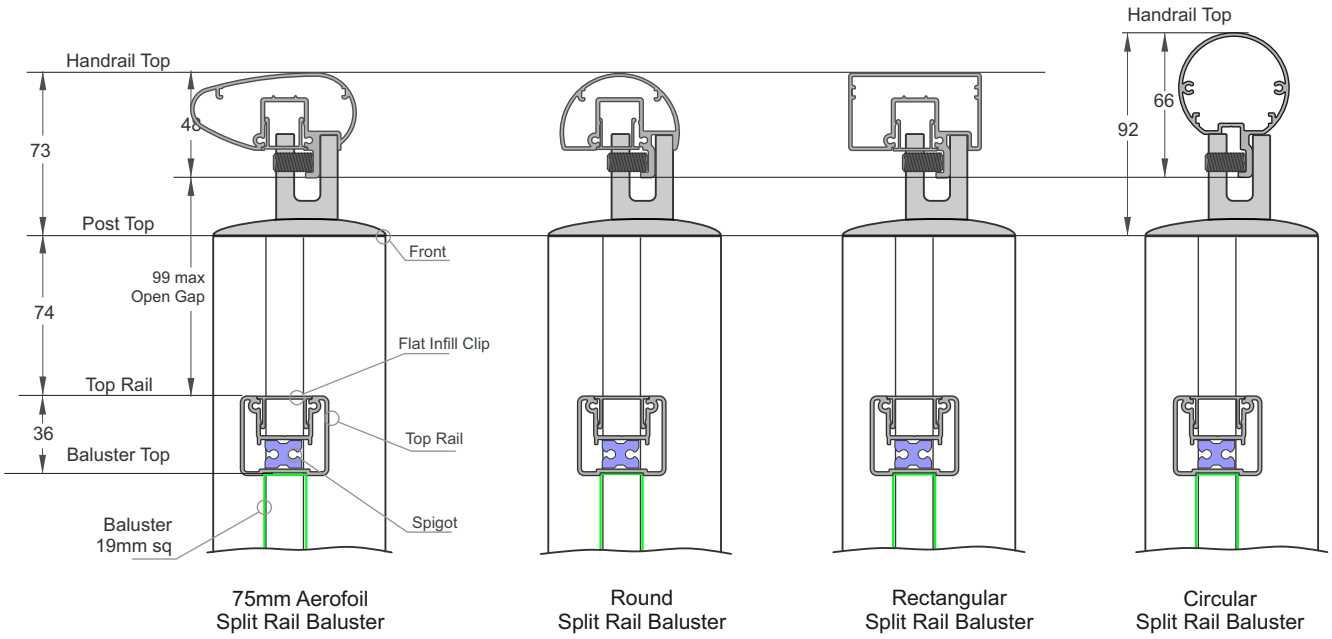

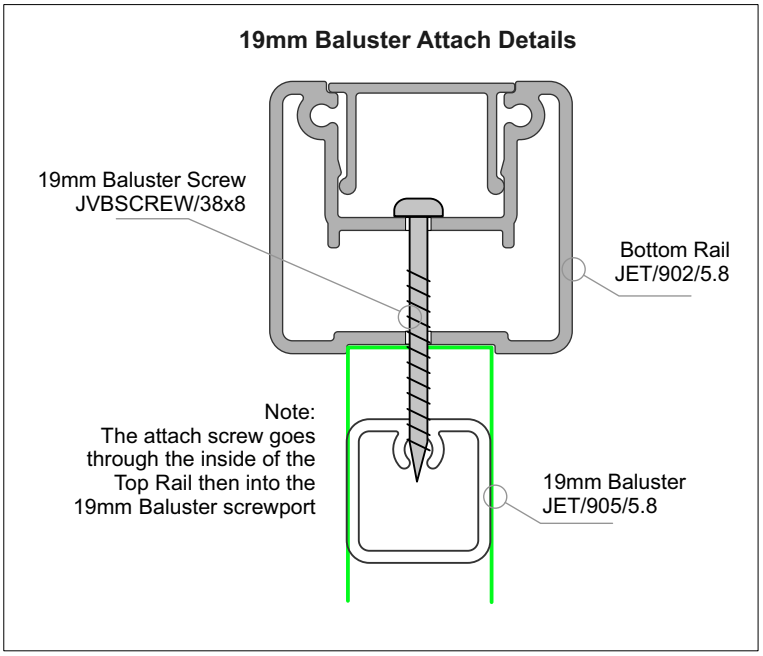

Metal Balusters
Post - Offsets, With Bottom Rail

For 17mm Baluster JVB/005/5.3
Applies to Layouts 6, 7, 9 and 10

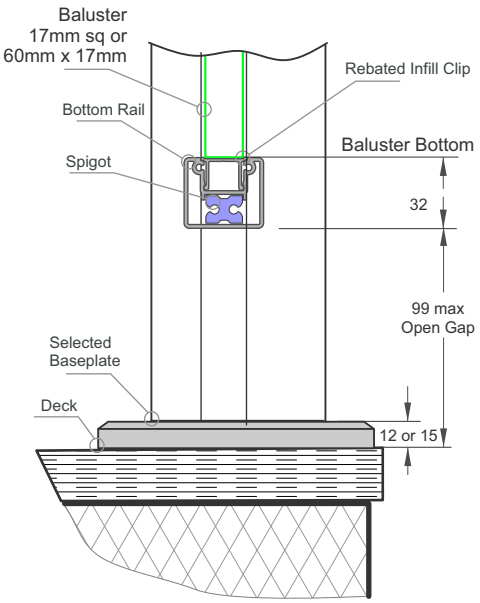

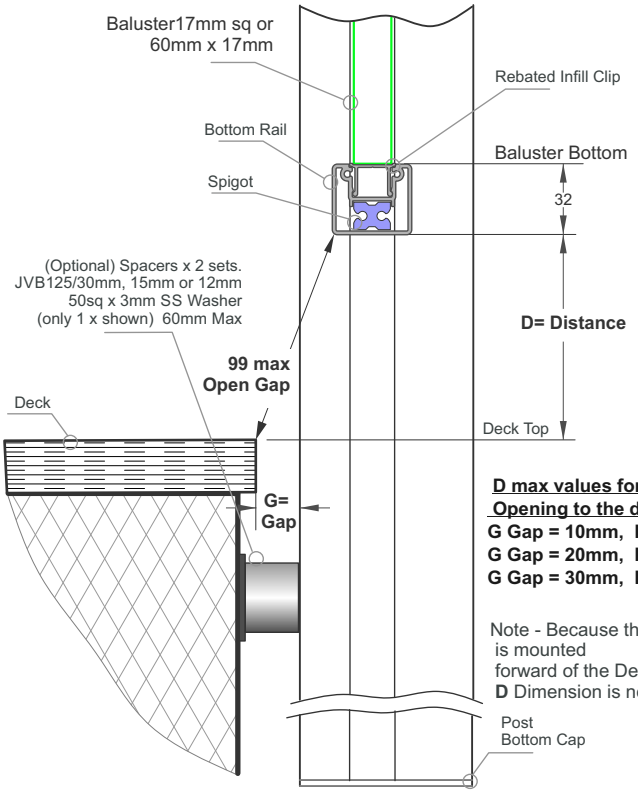

D max values for a 99mm Opening to the deck
G Gap = 10mm, D = 96mm
G Gap = 20mm, D = 93mm
G Gap = 30mm, D = 88mm

Note - Because the Bottom Rail is mounted forward of the Deck Edge, the **D** Dimension is no longer 99mm.

Metal Balustrades
Post - Offsets, With Bottom Rail

For 19mm Baluster JET/905/5.8
Split Rail Layout only
Applies to Layout 8 only

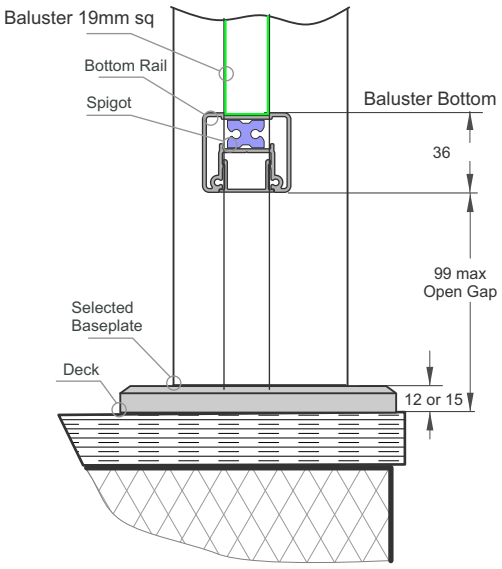

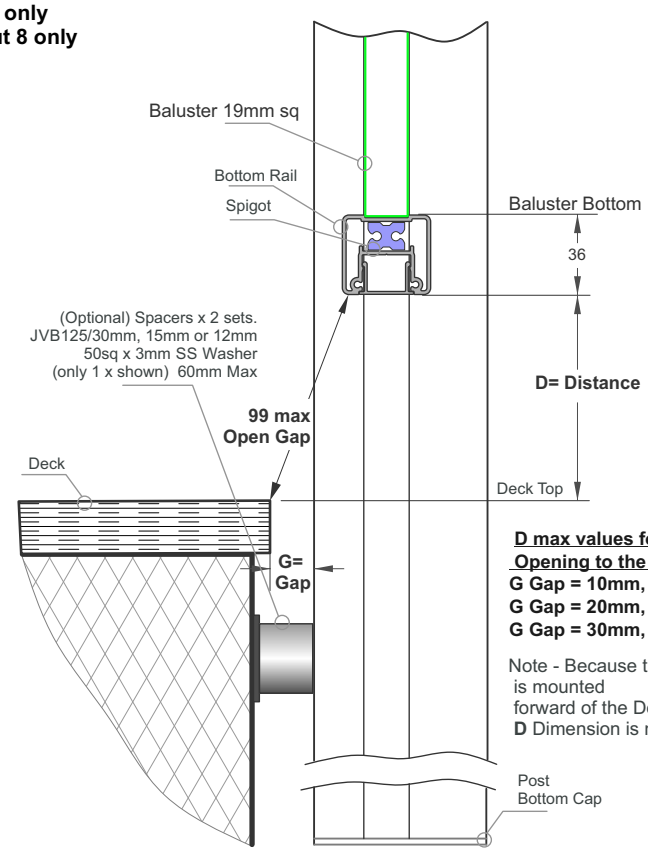

D max values for a 99mm Opening to the deck
G Gap = 10mm, D = 96mm
G Gap = 20mm, D = 93mm
G Gap = 30mm, D = 88mm

Note - Because the Bottom Rail is mounted forward of the Deck Edge, the **D** Dimension is no longer 99mm.

Metal Balusters
Corner Offsets
17mm or 19mm sq Sq Baluster

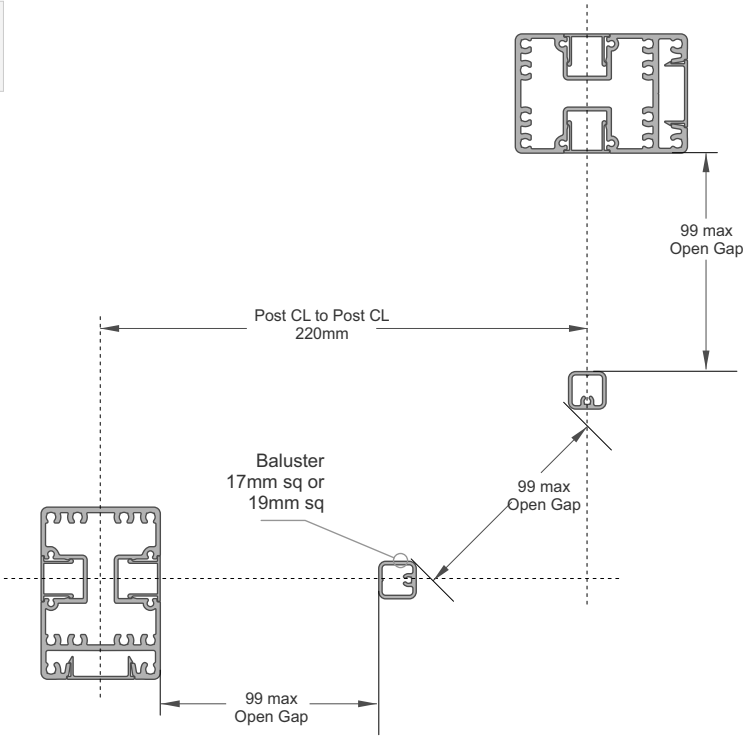

Metal Balusters
Corner Offsets
60mm Slat Baluster

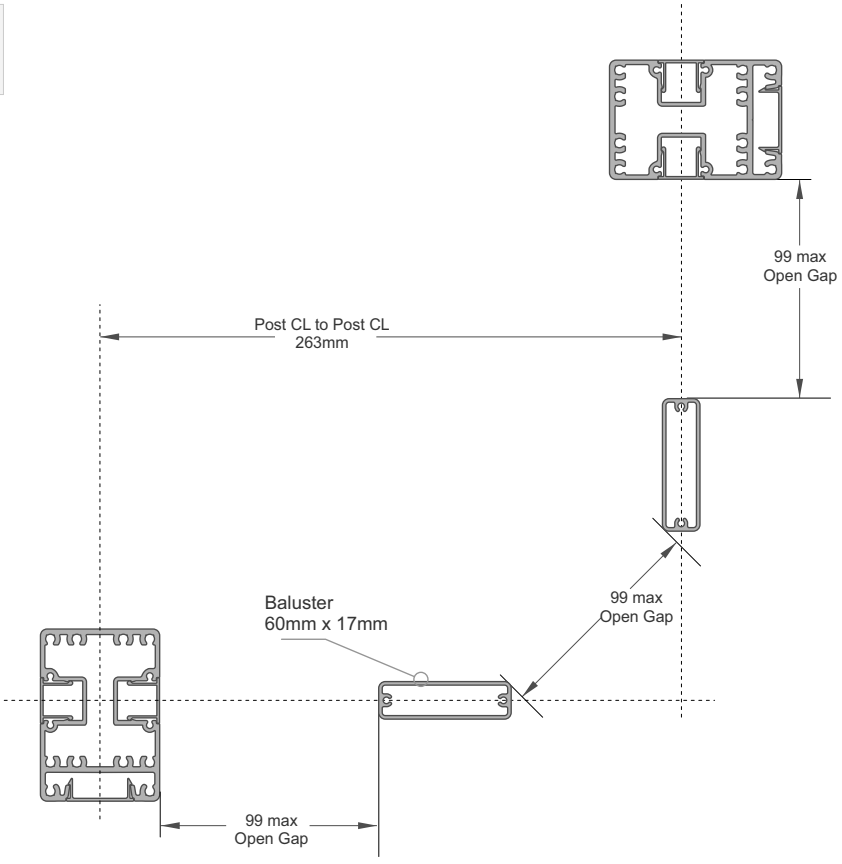

Juralco Edgetec® Commercial C3 Balustrade System -Class Corners
Details are not suitable for Occupancy C1/C2 or D

10mm Toughened Safety Glass - Fully Framed
Selected Hand Rails + Bottom Rail. Glass fixed to Posts and Top and Bottom Rails

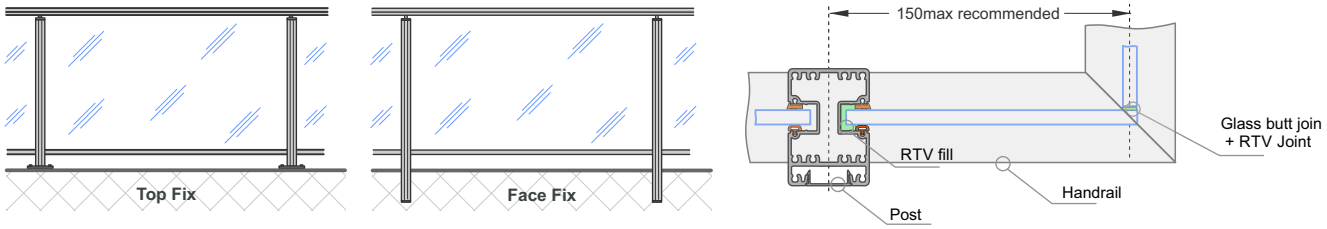

10mm Toughened Safety Glass - Full height - Fully Framed or Split Rail
Selected Hand Rails + Bottom Rail. Glass fixed to Top and Bottom Rails

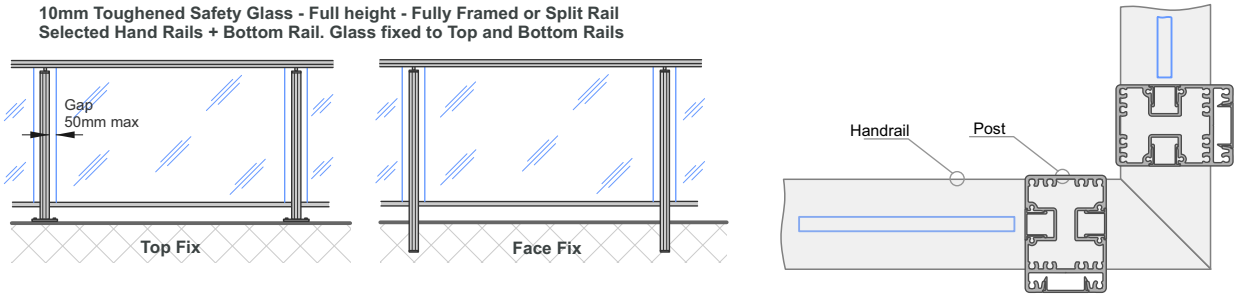

12mm Toughened Safety Glass - Semi Frameless
Selected Hand Rails (attached to Posts) Glass fixed to Posts and Top Rail

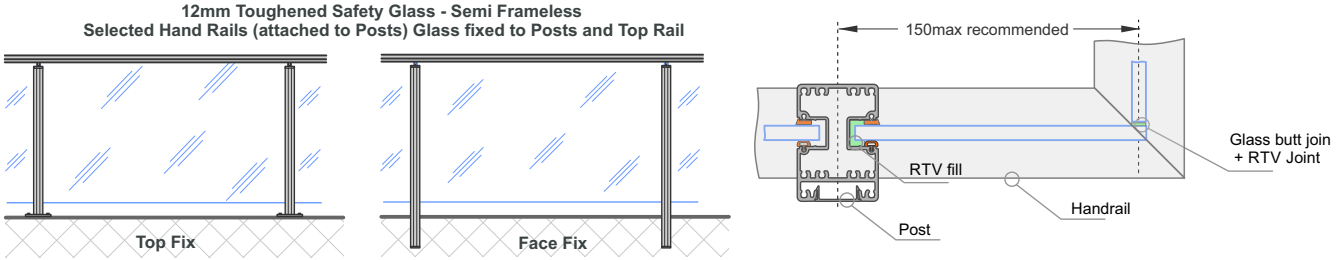

15mm Toughened Safety Glass - Semi Frameless
Selected Interlinking Top Rail (mounted on Glass) or Selected handrail (mounted on posts)
Glass fixed to Posts

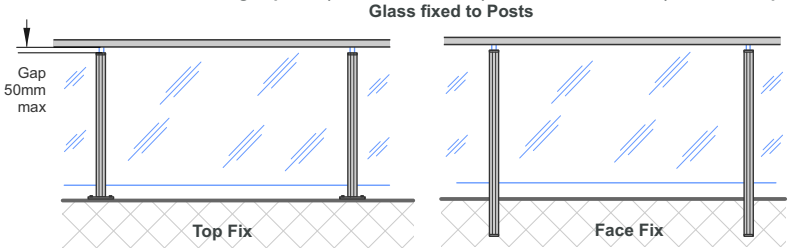

15mm Toughened Safety Glass - Semi Frameless.
JEC 29 Side mount Brackets Deckside mounted on Posts + selected Hand Rails
Glass fixed to Posts

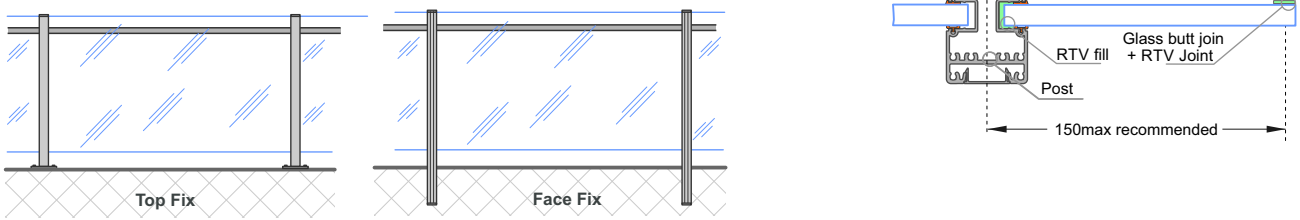

Post Caps - no swivel/clamp

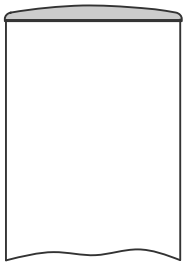

All tap fit

Post Caps - with swivel/clamp

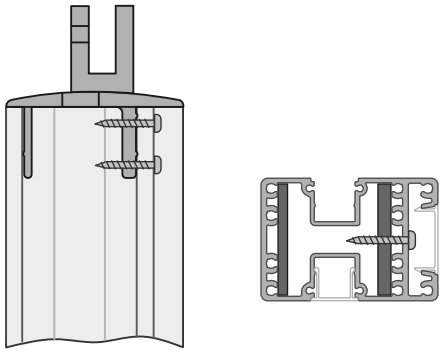

Attach from side with
2 x 10g dia x 25mm Pan ST

Handrail Attach

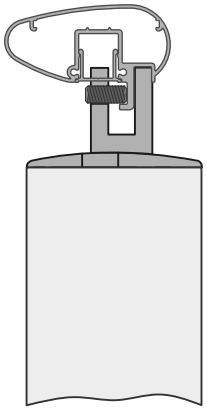

Clamp attach with M8 grubscrew

Baseplate to Post Attach

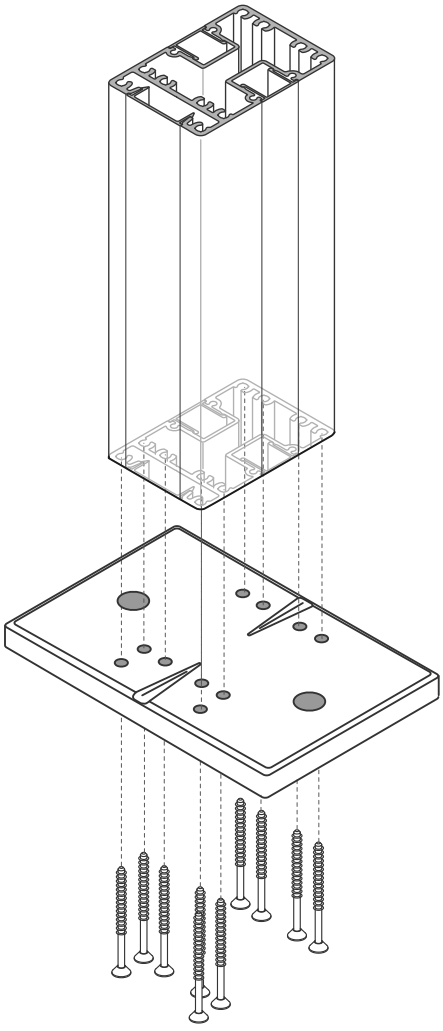

JVBHT SCREW/ 50 x 10
10 x C/S PK SQ drive high tensile screws

Glass Support Attach

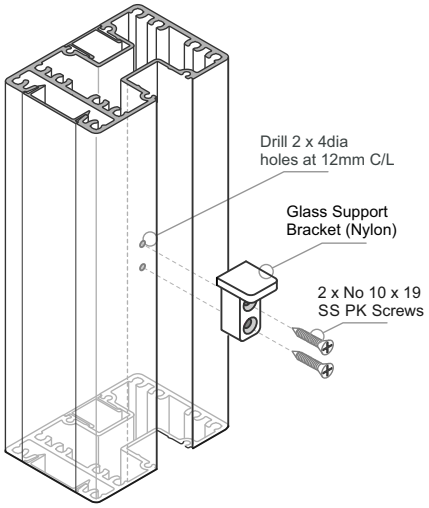

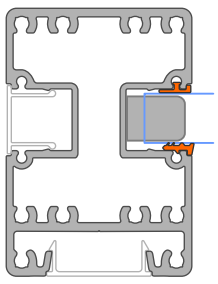

Showing Glass and seals
above the Glass Support Bracket

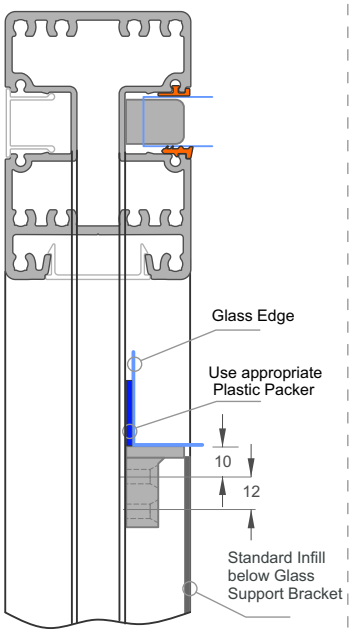

Top/Bottom Rail to Post Attach

For Fully Framed Glass
and for Metal Balusters, 17mm sq and 60mm x 17mm

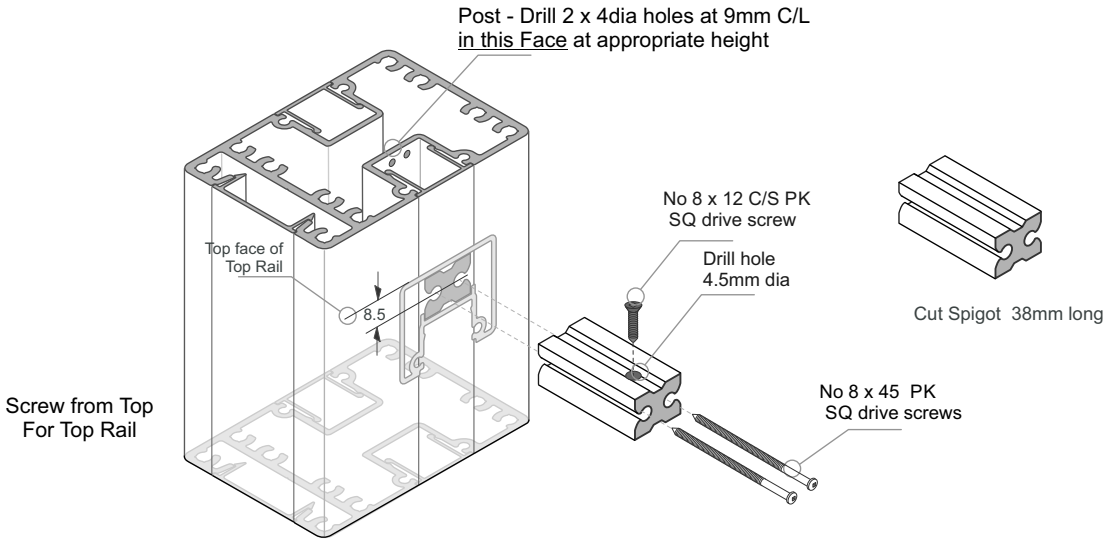

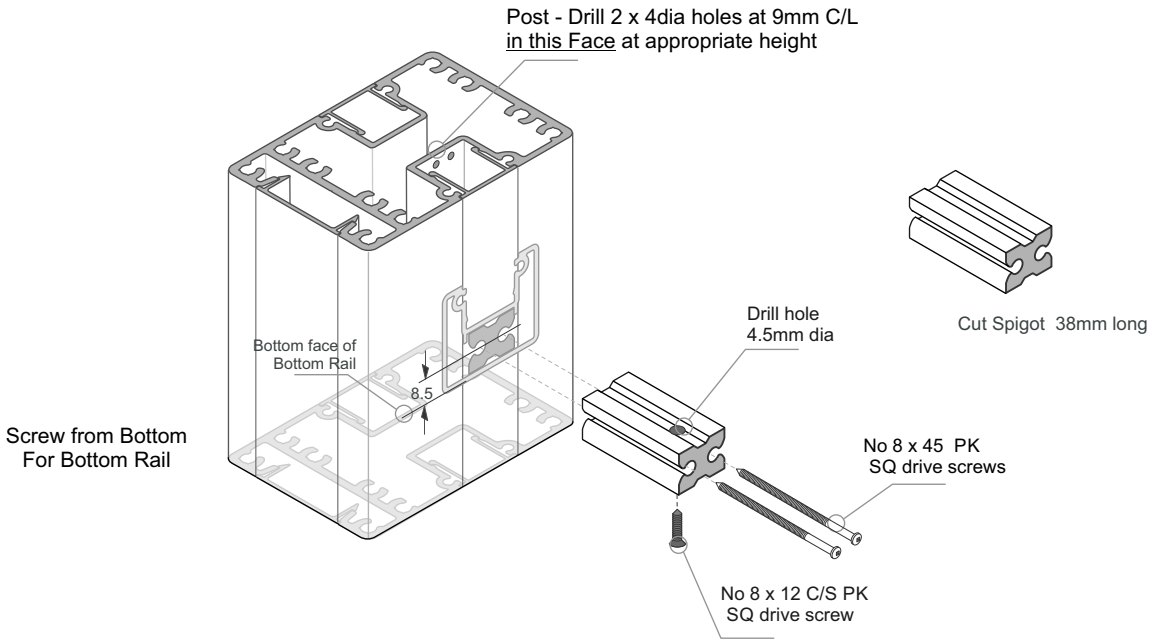

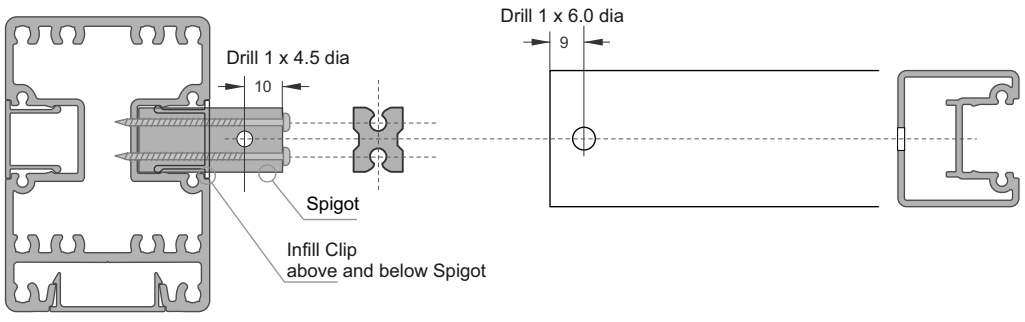

Attaching Bottom or Top Rail
to Post JET/208/5

Top/Bottom Rail to Post Attach

For Metal Balusters, 19mm sq

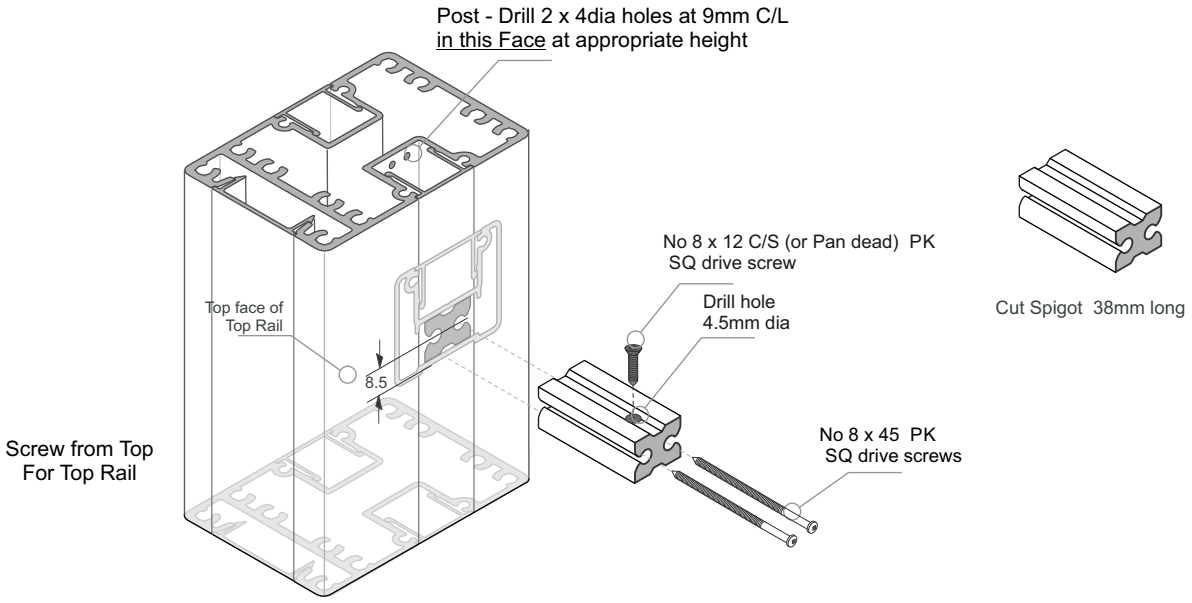

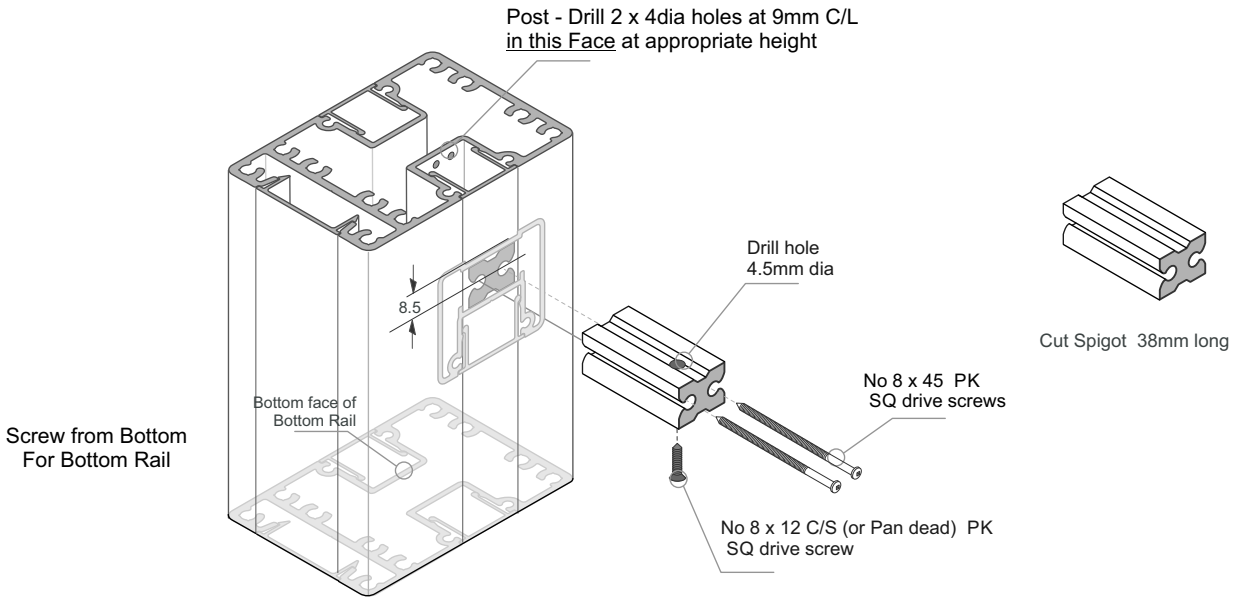

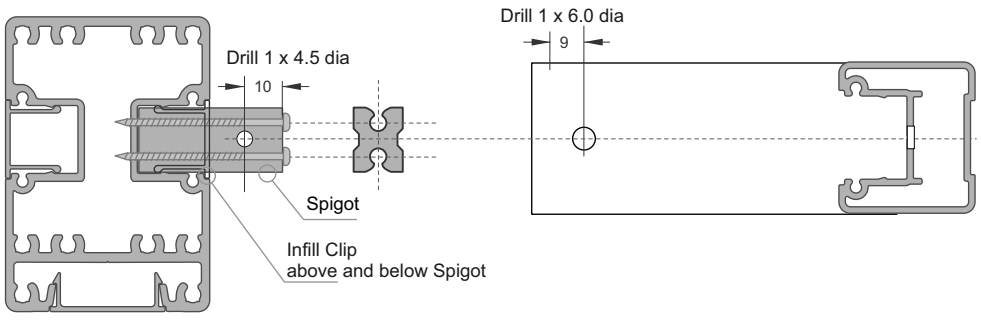

Attaching Bottom or Top Rail
to Post JET/208/5

This page applies to 15mm Toughened Glass, No 4 layout only

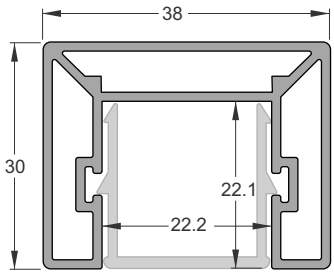

Rectangular Interlinking Top Rail
Part No JET/220/5.8
Also showing Infill Clip, for
use in between Glass Panels

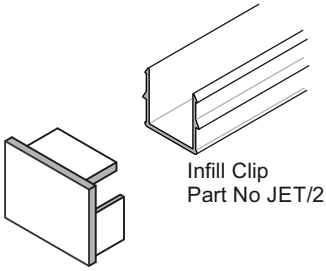

Infill Clip
Part No JET/215/5.8

Interlinking Top
Rail End Cap
Part No JET 37

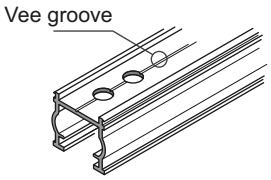

Interlinking Top Rail Gasket
for 15 mmToughened Glass
Part No JET /Gasket 15/2.9

---

1 - 15mm Glass and Gasket

Application Notes:
- Cut short lengths of Gasket (50mm) and place say every 700mm.
- Cut/adjust Interlinking rail to correct dimensions, test in place.
- Remove all, install full cut lengths of Gasket to glass top edge

- Assemble Top Rail + Joiners and suitable End plates

- Place blobs of V60 silicone in every Gasket hole
- Then place Top Rail extrusion + Joiners and End plates in place
  clipping firmly to Gasket
- Tape all down, wait 24 hrs to fully bond. Clean up.

Note: Ends must be attached to structure or post,
- Joins must have a suitable joiner plate

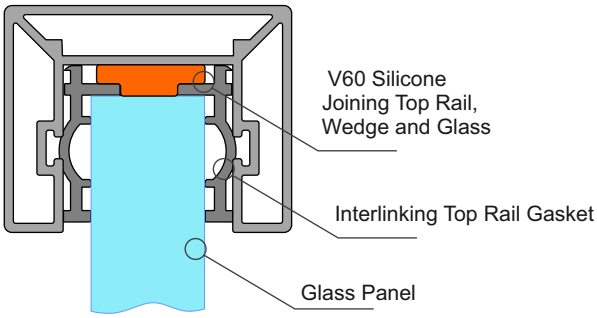

Juralco Edgetec® Commercial C3 Balustrade System
38mm Rectangular Interlinking Top Rail - Corner Connectors and Joiners

1 - Connectors

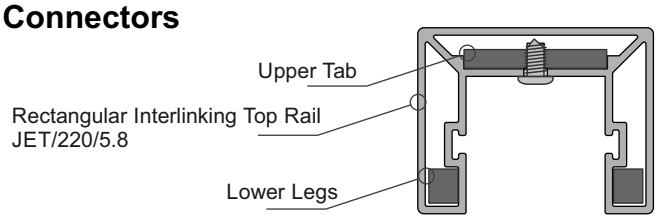

Swivel Kits: (After cutting extrusions to length)
- With Swivel in place, spot drill from below for position
- Drill out Swivel to 3mm dia, extrusion to 4mm dia
- Use No6 x 1/4in SS ST Pan sq drive screws, 2 x ea side of joint
- Both sides must be attached.
- Join together with the M6 x 25 C/S SS Screw

Interlinking Top Rail
Horizontal Fixed
90 deg Connector
JET 45A

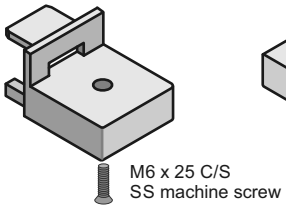

Interlinking Top Rail
Horizontal Fixed
90 deg Connector
JET 45B

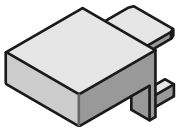

Rectangular Interlinking Top Rail
Horizontal Fixed 90deg Kit
JET220/90deg Corner Kit
(JET 45A and B + screw)

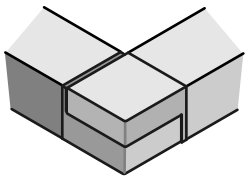

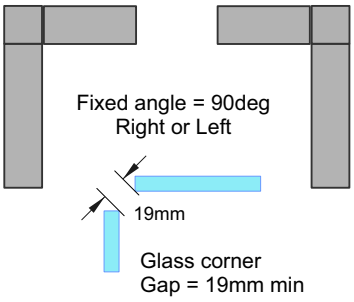

Interlinking Top Rail
Horizontal 0 - 90deg
Swivel Connector
JET 46A

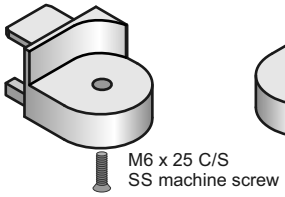

Interlinking Top Rail
Horizontal 0 - 90deg
Swivel Connector
JET 46B

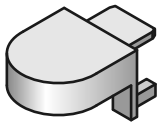

Rectangular Interlinking Top Rail
Horizontal 0 - 90 deg Right/Left
Swivel Connector Kit
JET220/Horizontal Adj Corner Kit
(JET 46A and B + screw)

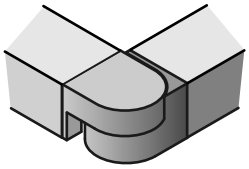

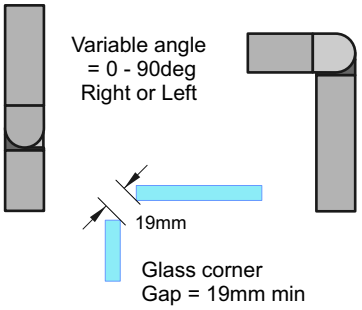

Interlinking Top Rail
Vertical 35deg up
to 35 deg down
Swivel Connector
JET 47A

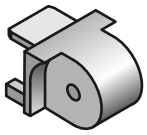

M6 x 25 C/S
SS machine screw

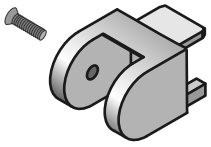

Interlinking Top Rail
Vertical 35deg up
to 35 deg down
Swivel Connector
JET 47B

Interlinking Top Rail Vertical 35deg up
to 35 deg down. Swivel Connector Kit
JET220/Vertical Adj Corner Kit
(JET 47A and B + screw)

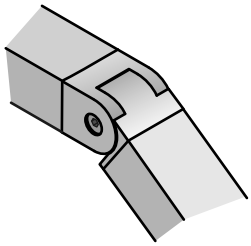

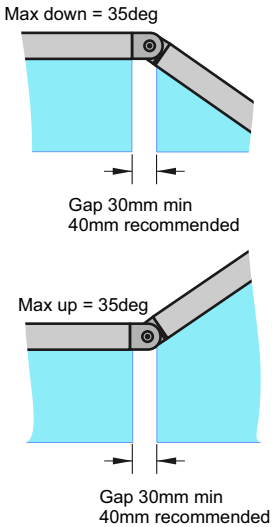

---

2 - Joiners

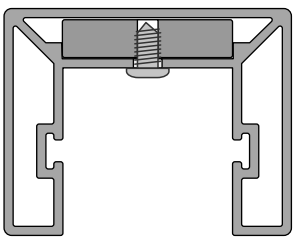

Joiners: (After cutting extrusions to length)
- With Joiner in place, spot drill from below for position
- Drill out to joiner to 3mm dia, extrusion to 4mm dia
- Use No 6 x 1/4in SS ST Pan sq drive screws, 2 x ea side of joint
- Both ends must be attached.
- Joins, where required must be at the end of Glass Panels

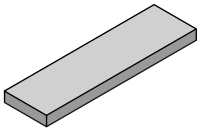

Interlinking Top Rail
Straight Joiner
80x22.8x5mm
JET 30

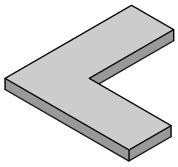

Interlinking Top Rail
Corner Joiner
75x75x5mm
JET 31

Joiners both 22.5 x 5mm Aluminium

This page applies to 15mm Toughened Glass, No 4 layout only

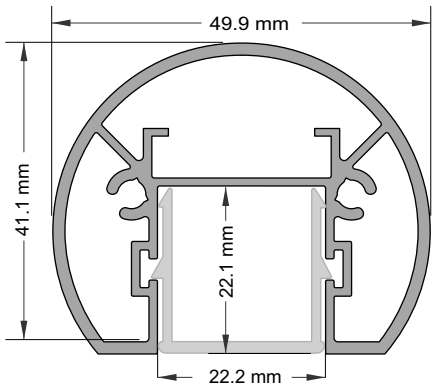

Round Interlinking Top Rail
Part No JET/211/5.8
Also showing Infill Clip, for
use in between Glass Panels

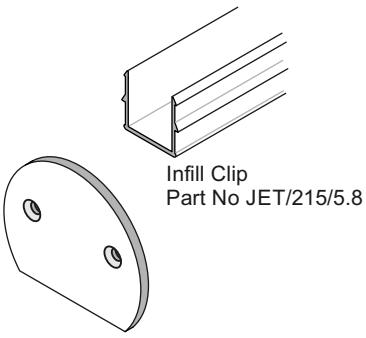

Infill Clip
Part No JET/215/5.8

Round Interlinking
Top Rail End Cap
Part No JET/231

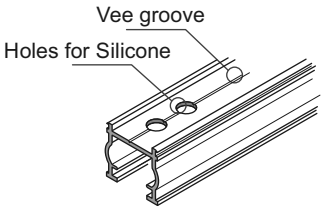

Interlinking Top Rail Gasket
for 15 mmToughened Glass
Part No JET /Gasket 15/2.9

---

1 - 15mm Glass and Gasket

Application Notes:
- Cut short lengths of Gasket (50mm) and place say every 700mm.
- Cut/adjust Interlinking rail to correct dimensions, test in place.
- Remove all, install full cut lengths of Gasket to glass top edge

- Assemble Top Rail + Joiners and suitable End plates

- Place blobs of V60 silicone in every Gasket hole
- Then place Top Rail extrusion + Joiners and End plates in place clipping firmly to Gasket
- Tape all down, wait 24 hrs to fully bond. Clean up.

Note: Ends must be attached to structure or post,
- Joins must have a suitable joiner plate

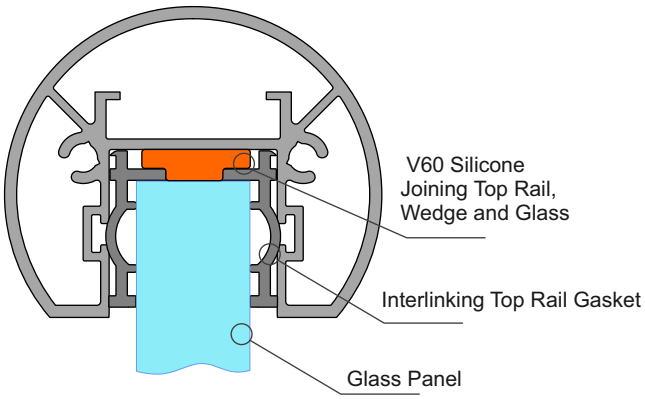

This page applies to 15mm Toughened Glass, No 4 layout only

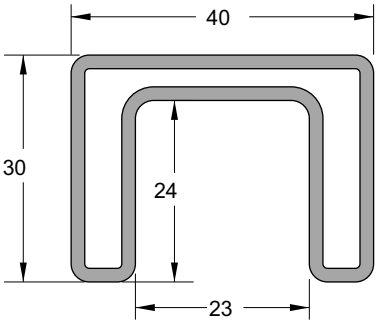

SS INTERLINKING TOP RAIL
JET/430/PSS/5.8

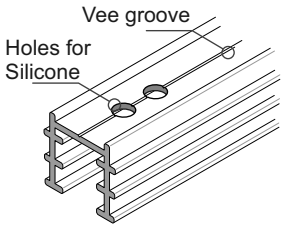

SS Interlinking Top Rail
15mm Glass Gasket
JET/430GT/15/2.9

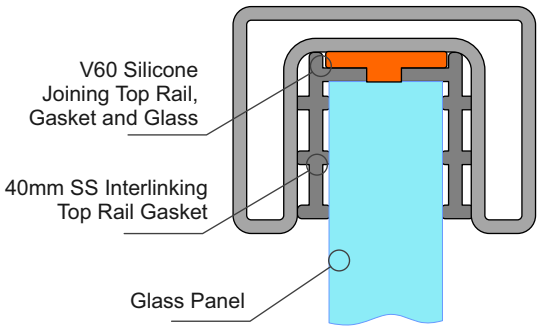

40mm SS Interlinking Rail Connectiors

Note : All these Brackets use M5 x 6 SS Grub Screws.
If necessary these holes must be Drilled + tapped M5, as shown.
The under side of the Interlinking Rail must be drilled
M6/7 to match M5 tapped holes positions, for access to Grub screws
- Joins, where required must be at the end of Glass Panels

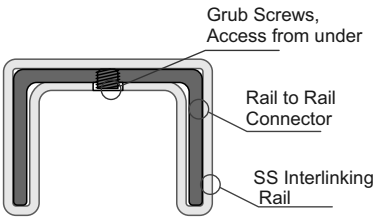

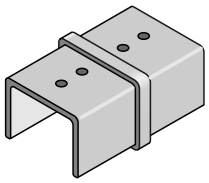

180deg INLINE JOINER 2205
JET/431/PSS
60mm x 40mm x 30mm deep

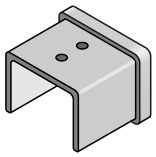

END CAP 2205
JET/432/PSS
33mm x 40mm x 30mm deep

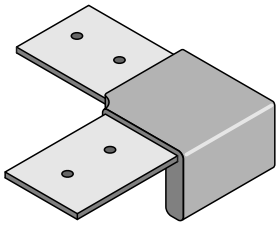

90deg JOINER 2205
JET/433/PSS
95mm x 95mm x 30mm deep

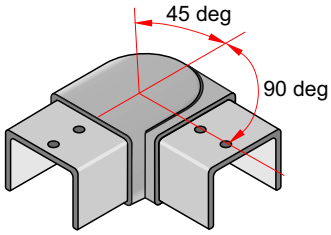

+90 to - 45 deg ADJUSTABLE
HORIZONTAL JOINER 2205
JET/434/PSS
70mm x 70mm x 30mm deep

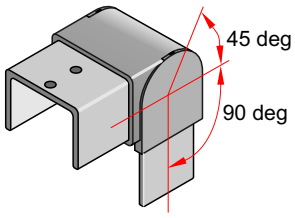

+90 to - 45 deg ADJUSTABLE
VERTICAL JOINER 2205
JET/435/PSS
60mm x 60mm x 40mm wide

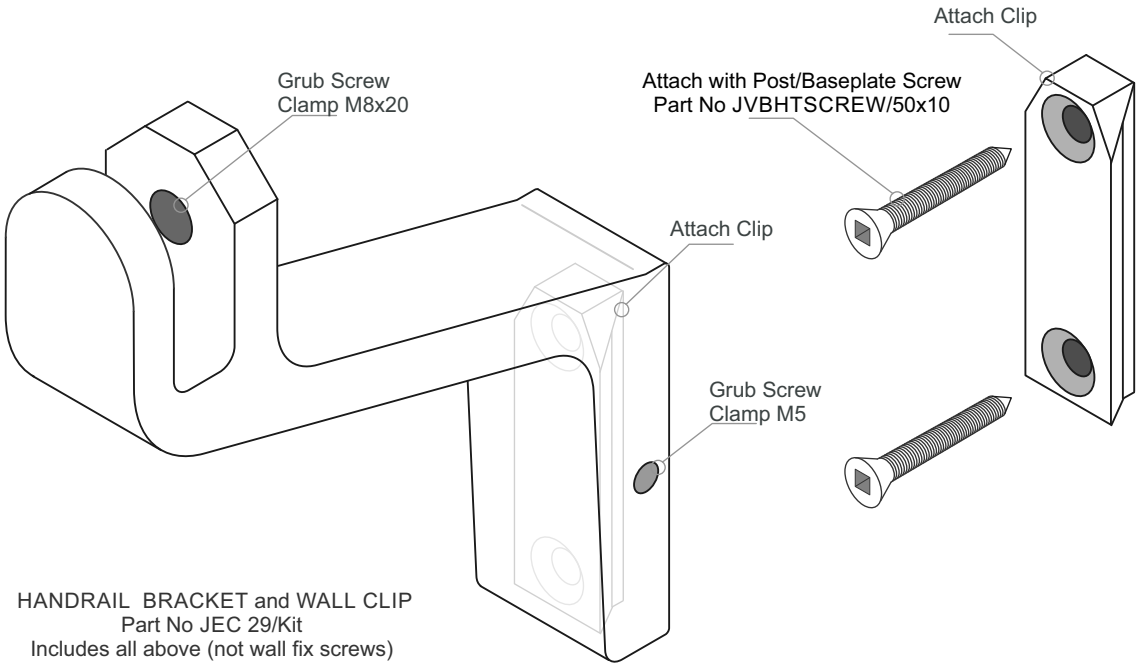

HANDRAIL BRACKET and WALL CLIP
Part No JEC 29/Kit
Includes all above (not wall fix screws)

Wall or Balustrade Post

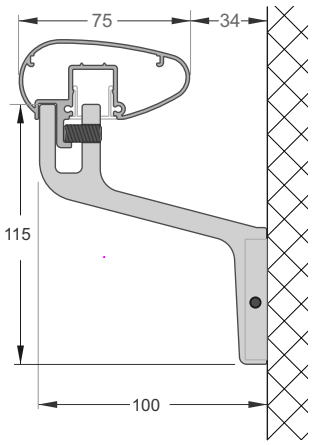

75mm AEROFOIL HANDRAIL
JEB/217/5.8

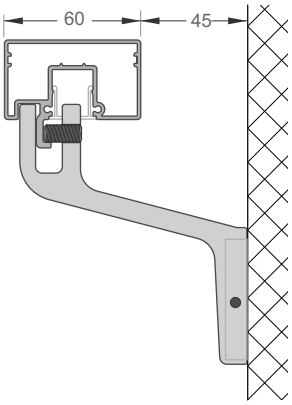

RECTANGULAR HANDRAIL
JEB/216/5.8

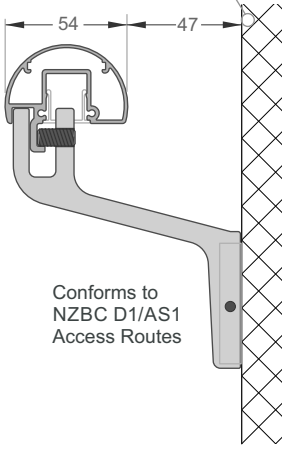

ROUND HANDRAIL
JEB/209/5.8

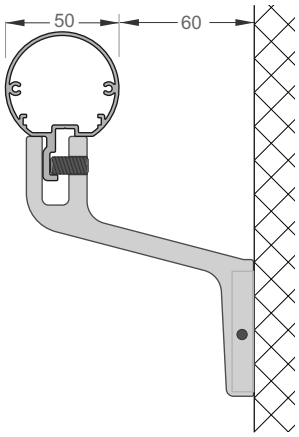

CIRCULAR HANDRAIL
JEB/221/5.8

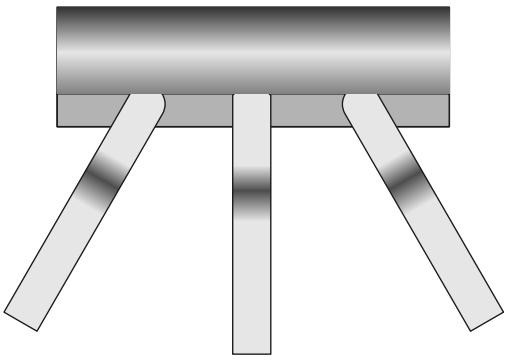

Hand rail bracket and Hand rail.
Angle attach up to 30deg

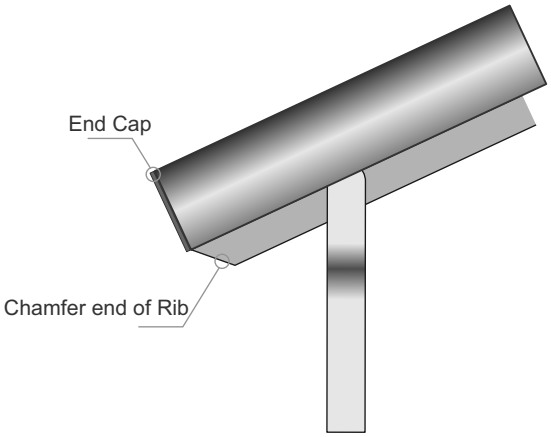

Hand rail bracket and Hand rail end

Glass Cleaning and Maintenance

Architectural glass products must be properly cleaned during the construction period so visual and aesthetic clarity are maintained. Because glass can be permanently damaged if improperly cleaned, glass producers and fabricators recommend strict compliance with the following procedures.

First, determine whether the glass is clear, tinted or reflective. Surface damage is more noticeable on reflective glass compared with the other glass products. If the reflective coated surface is exposed, either on the exterior or interior, special care must be taken when cleaning, as scratches can result in coating removal and a visible change in light transmittance. Cleaning tinted and reflective glass in direct sunlight should be avoided. Cleaning should begin at the top of the building and continue to the lower levels.

Commence cleaning by soaking the glass surfaces with clean water and a soap solution to loosen dirt or debris. Then, using a mild, non-abrasive commercial window washing solution, uniformly apply the solution to the glass surfaces with a non-abrasive applicator and follow with a squeegee to remove all of the cleaning solution from the glass surface.

Ensure that no metal parts of the cleaning equipment touch the glass surface and that no abrasive particles are trapped between the glass and the cleaning materials. All water and cleaning solution residue should be dried from the window gaskets, sealants and frames.

Scratches and Metal Scrapers

Scratches can occur from hard pointed objects or poor handling, but most often occurs from the careless removal of foreign matter from the glass surface.

Mortar splatter and paint are common offenders and efforts to remove after hardening almost always lead to surface damage. It is essential that the foreign materials are removed before they harden. Better still, if construction work continues after glazing, that the glazed areas are protected by adhesive plastic films or suitable tarpaulins or covers.

One of the common mistakes made by non-glass trades people, including glass cleaning contractors, is the use of razor blades or other metal scrapers on a large portion of the glass surface. Using large blades to scrape a window clean carries considerable risk of causing damage to the glass.

The glass industry, fabricators, distributors and installers neither condones nor recommends any scraping of glass surfaces with metal blades or knives. Such scraping usually permanently damages or scratches the glass surfaces. When paint or other construction materials cannot be removed with normal cleaning procedures, a new 25mm razor blade may have to be used. The razor blade should be used on small spots only. Cleaning should be done in one direction only. Never scrape in a back and forth motion as this could trap particles under the blade that could scratch the glass.

Blades or scrapers can dislodge “pickup” on toughened glass. There are fine particles of glass that are fused on to the surface during toughening. Once dislodged they can scratch the glass.

Glass Cleaning, Do’s and Don’ts

DO NOT..

- Do Not - Use Scrapers of any type or size on a Glass surface
- Do Not - Leave building dirt or residues to remain on Glass for a period of time.
- Do Not - Begin cleaning glass until you have identified the surface type.
- Do Not - Clean Glass surfaces in direct sunlight.
- Do Not - Allow dirty water or cleaning residues to remain on the Glass.
- Do Not - Begin cleaning before rinsing off a loose residues.
- Do Not - Use abrasive cleaning solutions, materials or solvents.
- Do Not - Allow metal parts of the cleaning equipment to come in contact with the Glass.
- Do Not - Trap abrasive particles between the cleaning material and the Glass.

DO...

- Clean glass promptly when dirt or building residues appear.
- Determine glass surface type.
- Exercise special care when cleaning coated surfaces.
- Avoid cleaning glass surfaces in direct sunlight.
- Start cleaning at the top of a building, then continue to lower levels.
- Soak the glass surface in a clean soapy solution before cleaning.
- Use a mild non abrasive commercial cleaner.
- Use a squeege to remove all cleaning solution.
- Try your procedures on a small window and check.
- Caution other trades re the care and protection of the glass surfaces.

**Residues of surface grit may be present from the toughening production process.
These grit particles must not be dragged across the surface.
NEVER use Metal Scrapers**

All above reprinted with permission from Metro Glass Tech

Juralco Edgetec® Commercial C3 Balustrade System
Powder Coating Care and Maintenance

Powder Coating Installation Care

Warning re use of solvents:
- In some cases strong solvents are recommended for thinning various types of paints and also for cleaning up mastics and sealants.
- These can be harmful to the extended life of the powder coated surface, and must not be used for cleaning purposes.
- It is important to note that the damage will not be visible immediately and may take up to l2 months to develop.

If paint splashes or sealants and mastics need to be removed then the following may be safely used:
Methylated Spirits, Ethyl Alcohol, Isopropanol or preferably a mild detergent in warm water.

Joinery Protection during Installation:
All the activity on a construction site means that your powder coated items may get knocked or scratched, splattered with mortar, plaster, textured coating or paint during the later stages of construction.

Please ensure that all powder coated articles are masked or covered at this time. It is far easier to prevent accidents than to try and correct them. Should your joinery receive mortar or paint splashes see that these are removed before cure and follow the instructions contained in this brochure.

Typical sticker used to warn other trades of the need to protect and mask off powder coated joinery (applies to anodised joinery also)

"IMPORTANT ALL TRADES"
This valuable aluminium joinery will suffer permanent damage from: plaster, mortar and paint splashes - Protect if splashes occur - Immediately wash down joinery with water or meths - Do not allow splashes to harden! ~ Do not use solvents! - Do not remove this label until final clean completed.



This photograph display damage that has occurred on site, post installation. The photo of the masked joinery displays clear signs of damage that could have occurred were it not masked. Please ensure that your joinery is protected right through the entire construction process.

Powder Coating Maintenance

External - Maintenance Program:
To extend the life of external powder coated articles and to comply with warranty requirements for powder coated aluminium joinery, a simple, regular maintenance program must be implemented.
The effects of ultra violet light, atmospheric pollution, dirt, grime and airborne salt deposits will all accumulate over time and must be removed or surface staining and weathering will occur, leading to an unsightly appearance.



For external coatings, cleaning should take place every six months. In areas where pollutants are more prevalent, such as beachfront houses and industrial or geothermal areas, then a cleaning program should be carried out on a more frequent basis ie. every one to three months.

Fences or Balustrades in close proximity to swimming pools must be washed down every six months, to clean off chlorine and salt deposits.

Cleaning your powder coating:
1. Carefully remove any loose surface deposits with a wet sponge.
2. Use a soft brush (non abrasive) and a mild household detergent (do not use solvents) in warm water, remove dust, salt and other deposits.
3. Rinse off with clean fresh water.



Restoring weathered or scratched surfaces:
Repair of Scuffed or Scratched surfaces
Dulux Spray Cans are available in all colour card colours.

Repair of Small Scratches or Chips.
Dulux Dabsticks are ideally suited for the repair of small scratches.
Dabsticks may not be available in all colour card colours.

Repair of Weathered areas .
Dulux Gloss Up is a light to medium cutting cream ideally suited for gloss restoration and has been specifically designed for this purpose.
Gloss Up contains no waxes or silicone and is a one step system.

Contact Dulux Powder Coatings , ph 0064 9 441 8244

All pages © Copyright Juralco Aluminium Building Products Ltd, 2022