Cad Ref. FPBA05-0

F900RS PROFILE BALUSTRADE
RAIL OPTIONS
GLAZED

Date 01.11.09 **Scale** 1:2

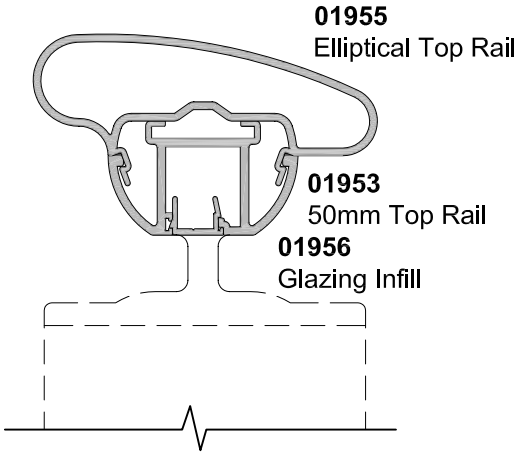

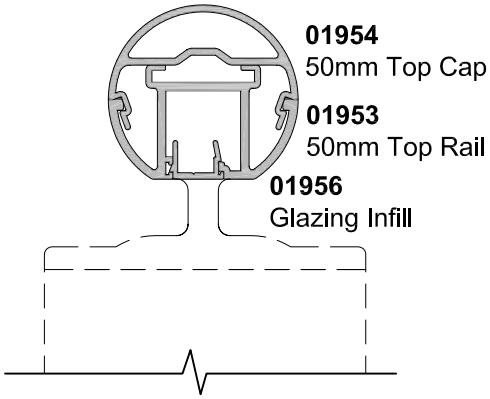

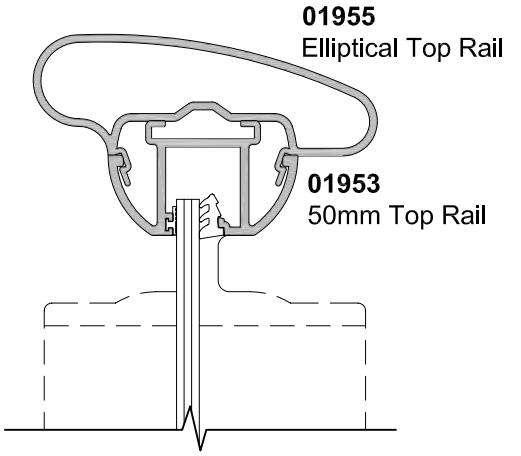

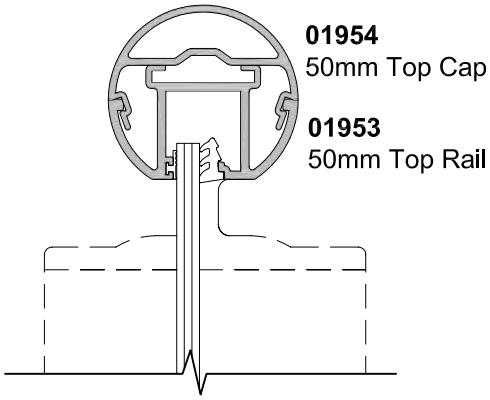

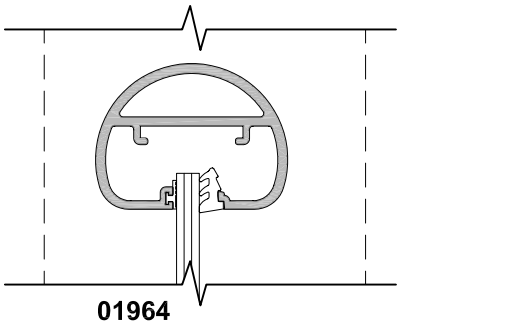

01964
50mm Bottom Rail
(as a mid Rail)

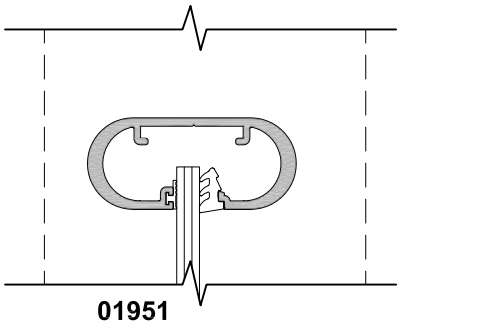

01951
55mm Bottom Rail
(as a mid Rail)

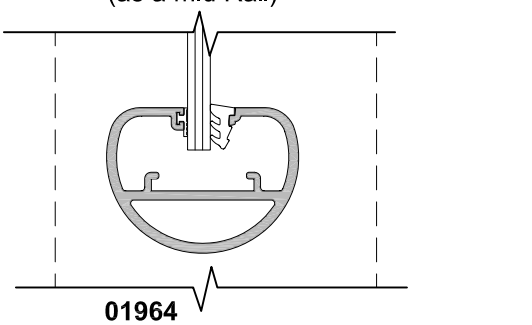

01964
50mm Bottom Rail

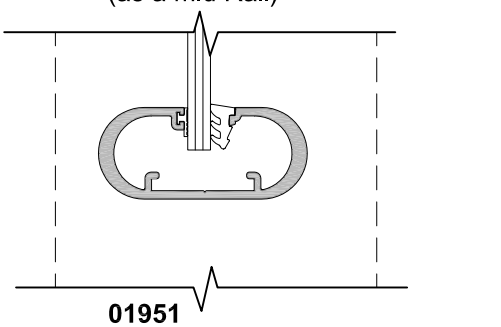

01951
55mm Bottom Rail

NB. Technical specification subject to change without notice.