Cad Ref. FPBA06-0

F900RS PROFILE BALUSTRADE

RAIL OPTIONS

BALUSTER

Date 01.11.09 **Scale** 1:2

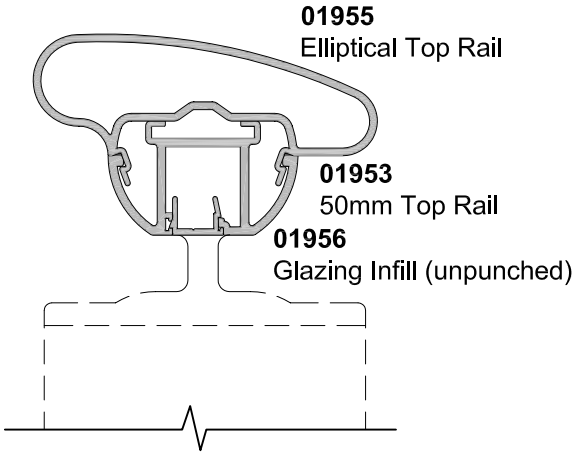

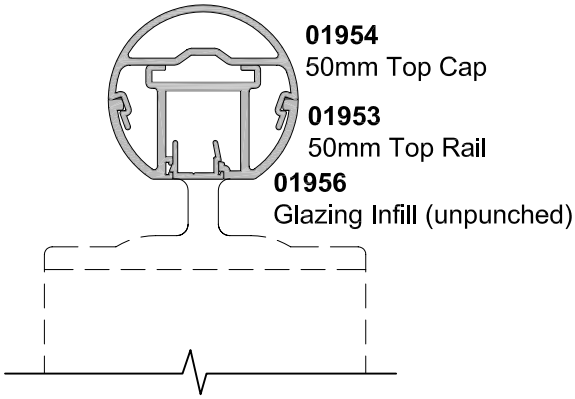

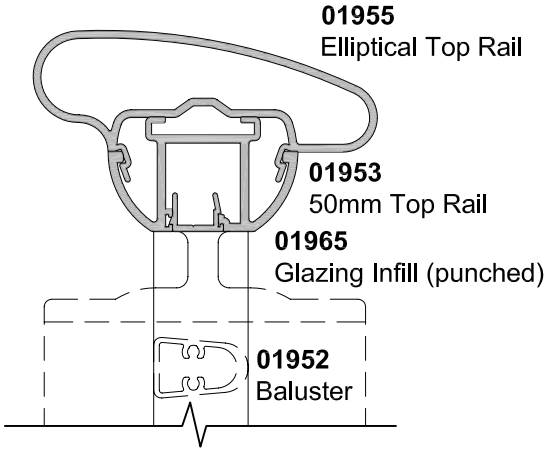

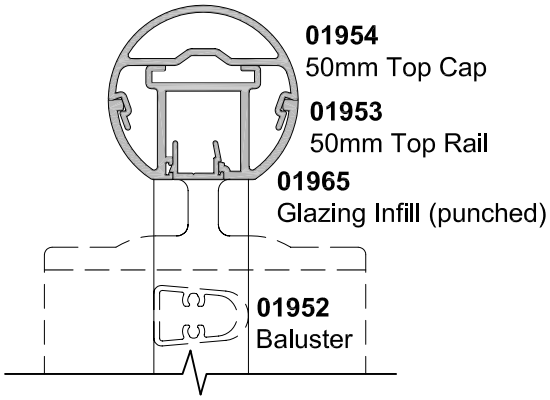

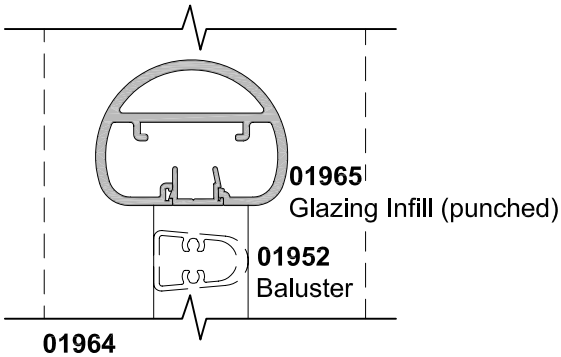

01964
50mm Bottom Rail (as a mid Rail)

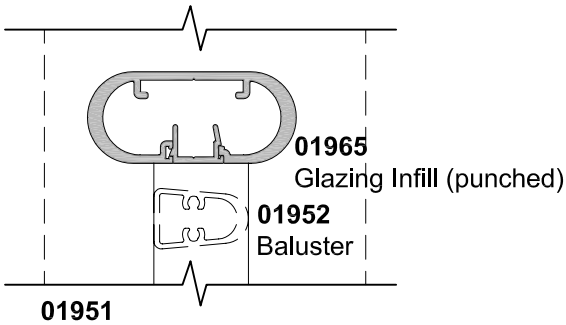

01951
55mm Bottom Rail (as a mid Rail)

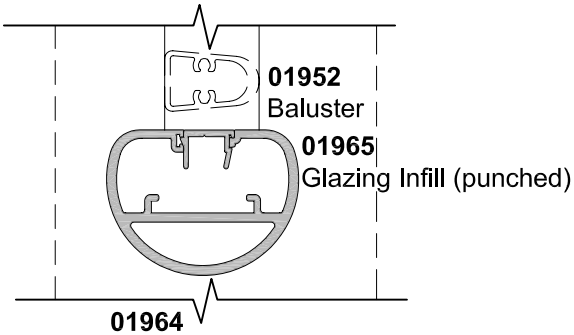

01964
50mm Bottom Rail

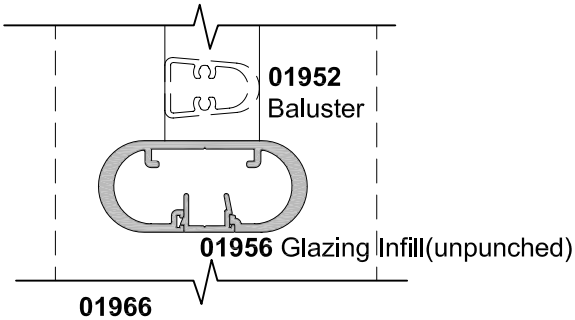

01966
55mm Bottom Rail (punched)