FIRST WINDOWS & DOORS

Cad Ref. FMAW02-0

METRO SERIES
F100MS AWNING WINDOW
EXTERNAL FIN MULLION / TRANSOM
CROSS SECTION

Date 01.06.11 **Scale** 1:2

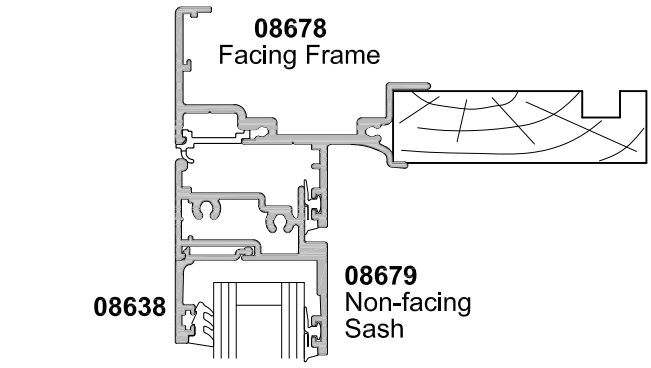

SECTION A-A

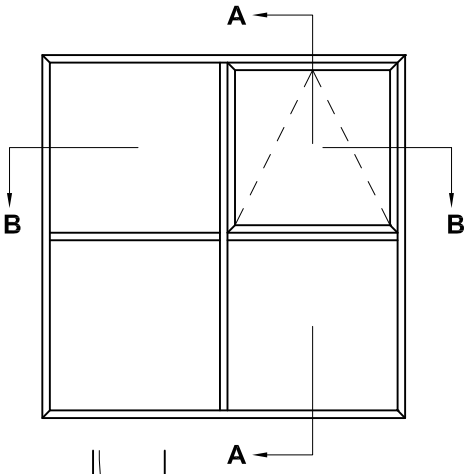

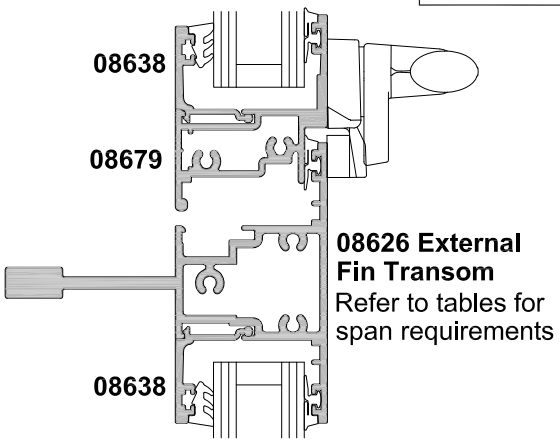

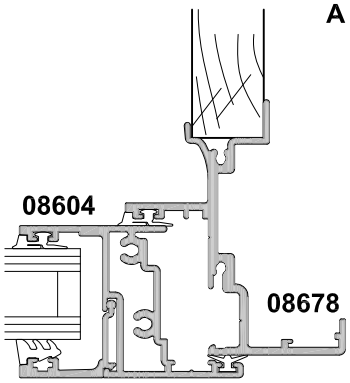

STANDARD BEADED SASH OPTION

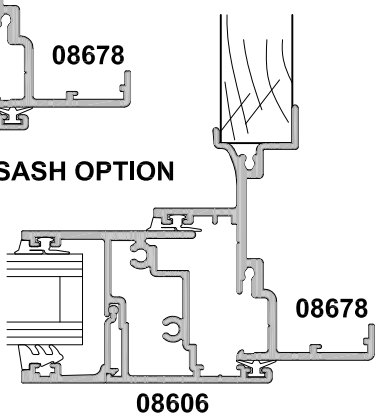

HEAVY BEADED SASH OPTION

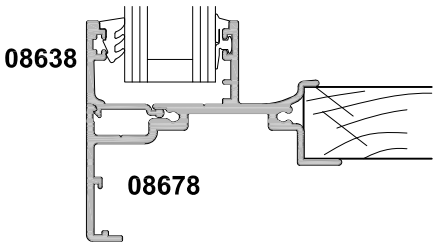

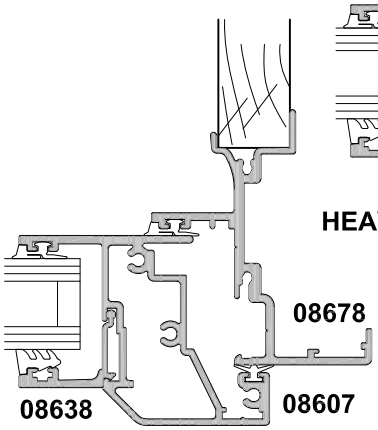

STEPPED BEADED SASH OPTION

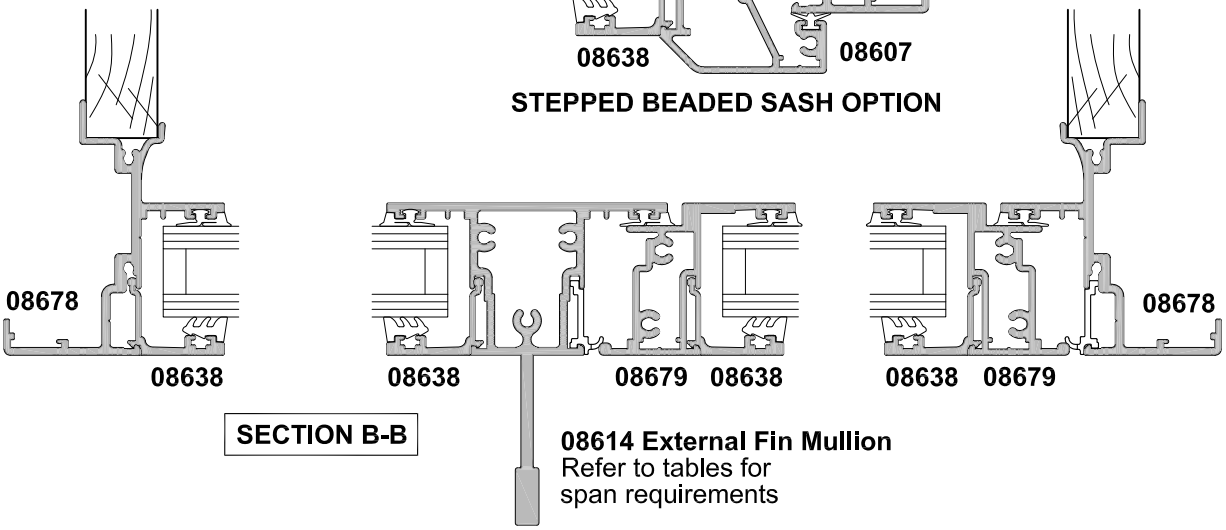

SECTION B-B