Cad Ref. FC4009-0

40MM WINDOW SERIES
F120FS SEISMIC FRAME
CROSS SECTION
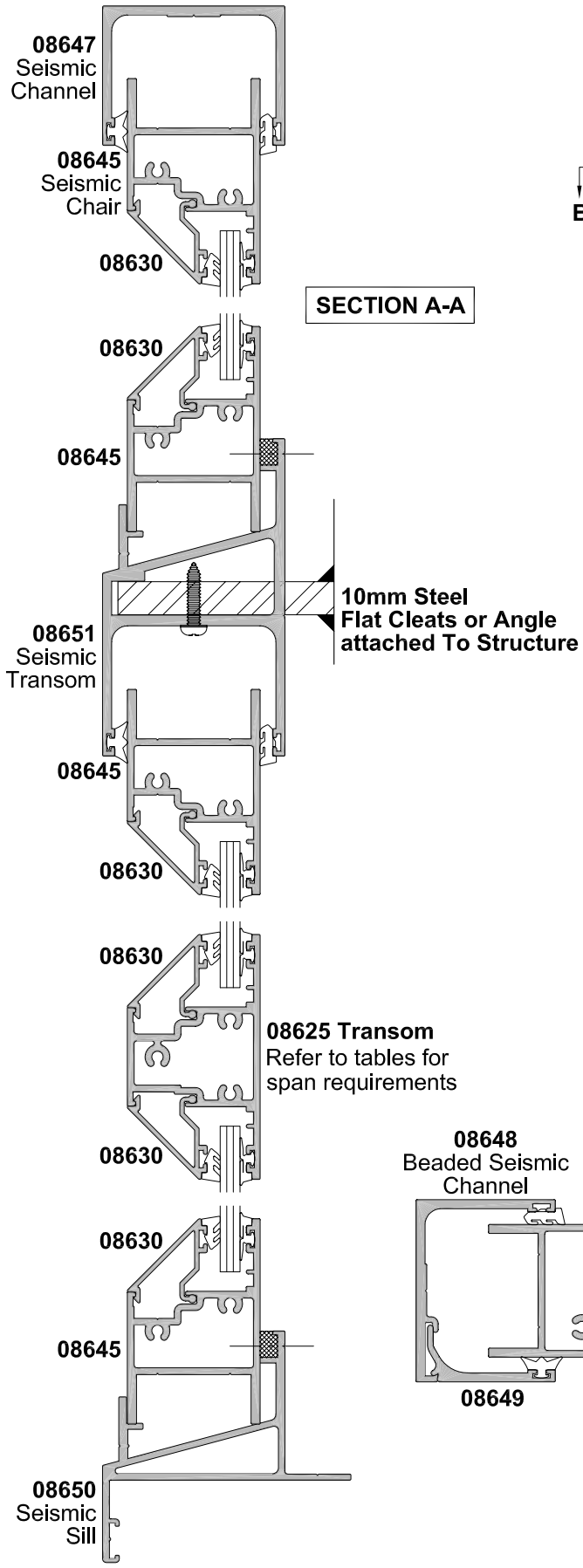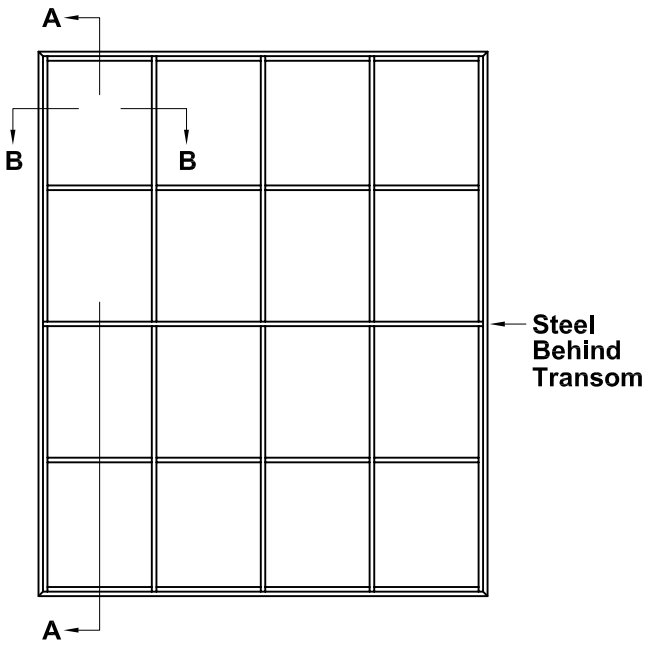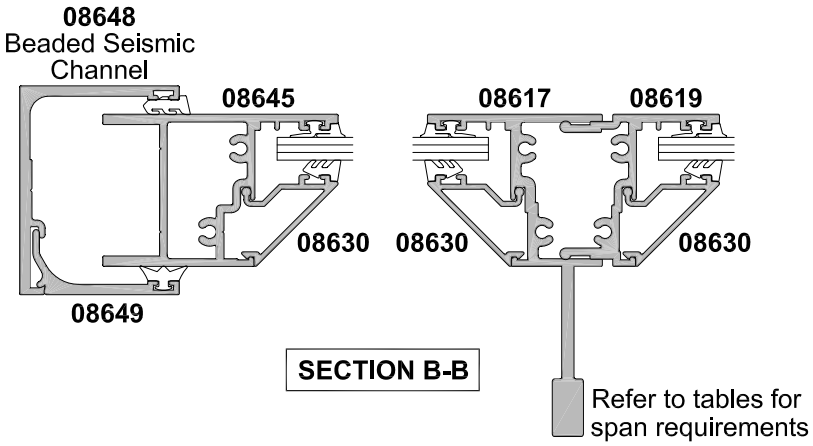
Date 01.11.09 **Scale** 1:2