Cad Ref. FKHD04-0

KLIMA SERIES
FRENCH DOOR, OPEN OUT AND OPEN IN
CROSS SECTION
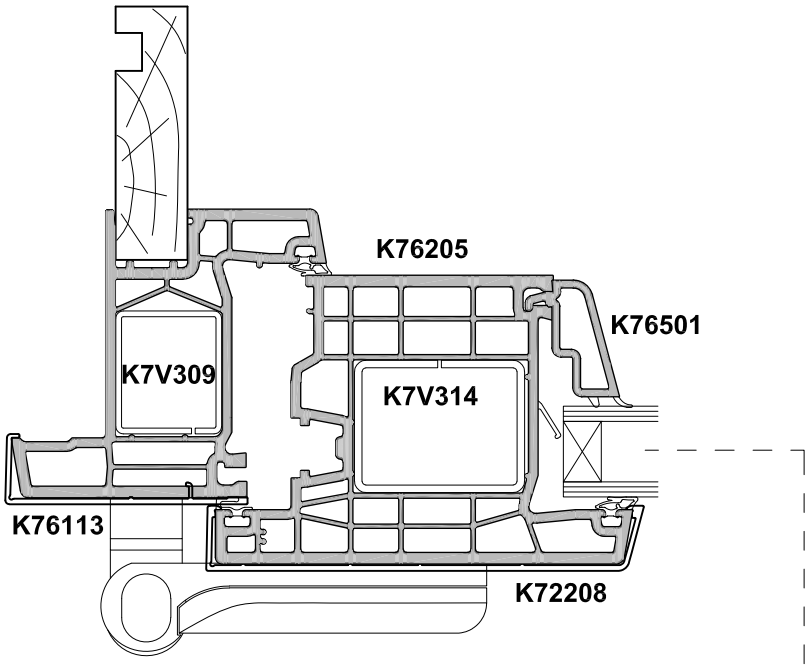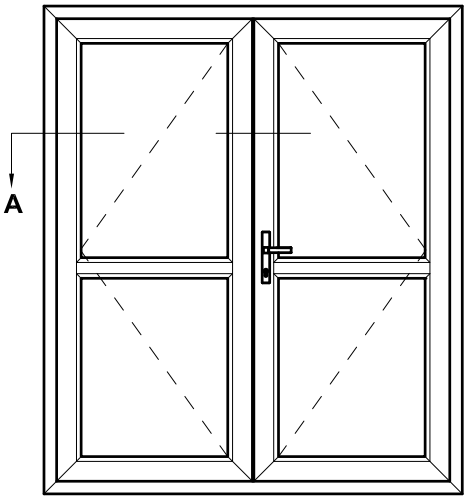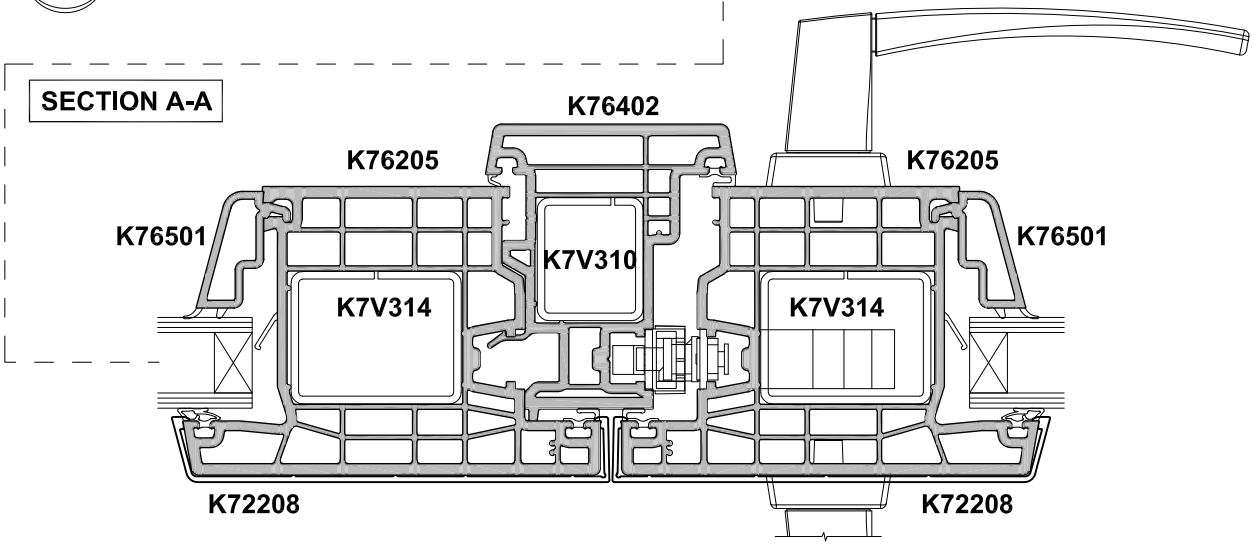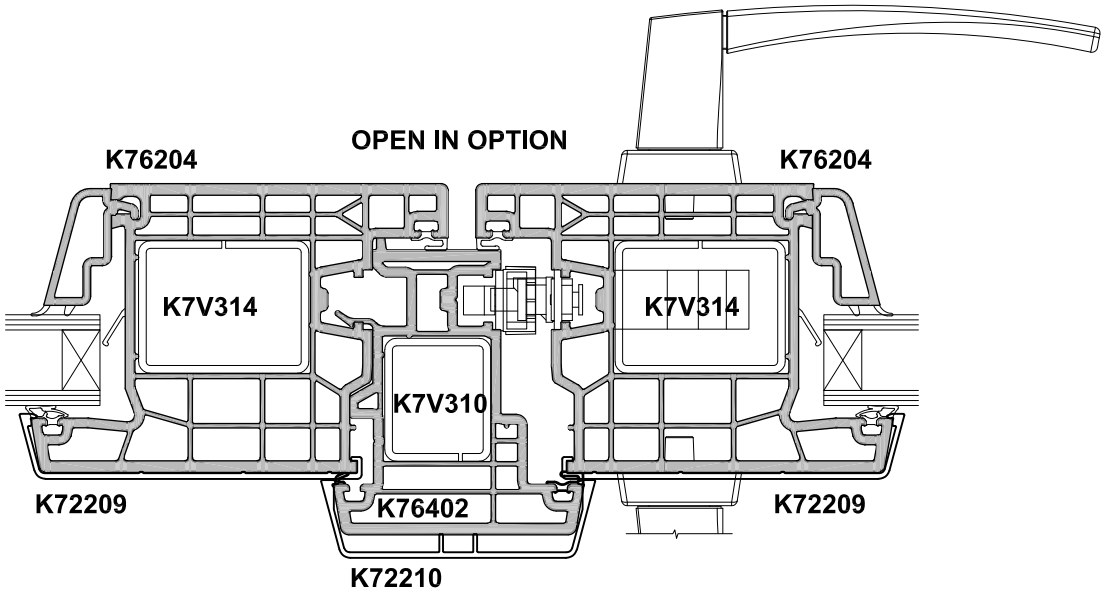
Date 29.09.21 **Scale** 1:2