ARCHITECTURAL THERMAL HEART BIFOLD WINDOWS 2+2 PANEL

Cad Ref | TABW04-0 **Scale** | 1:2 **Date** | 01.04.23

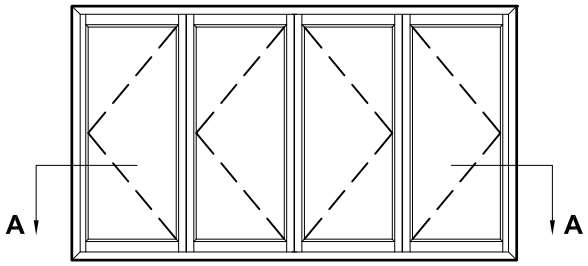

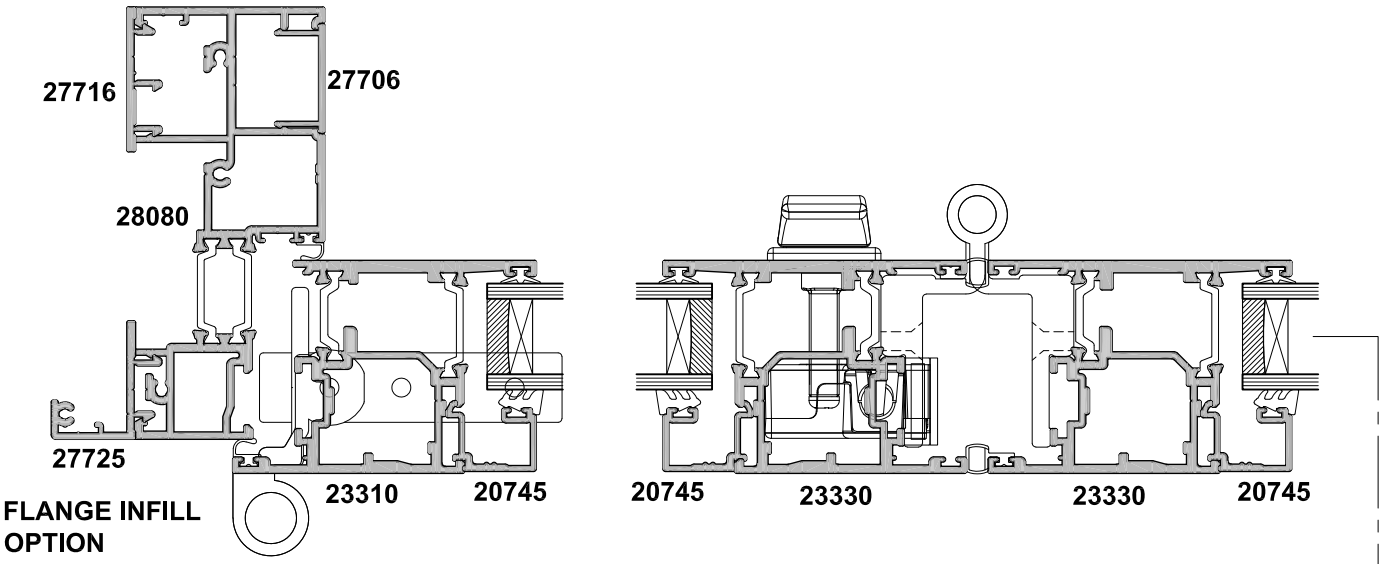

SECTION A-A

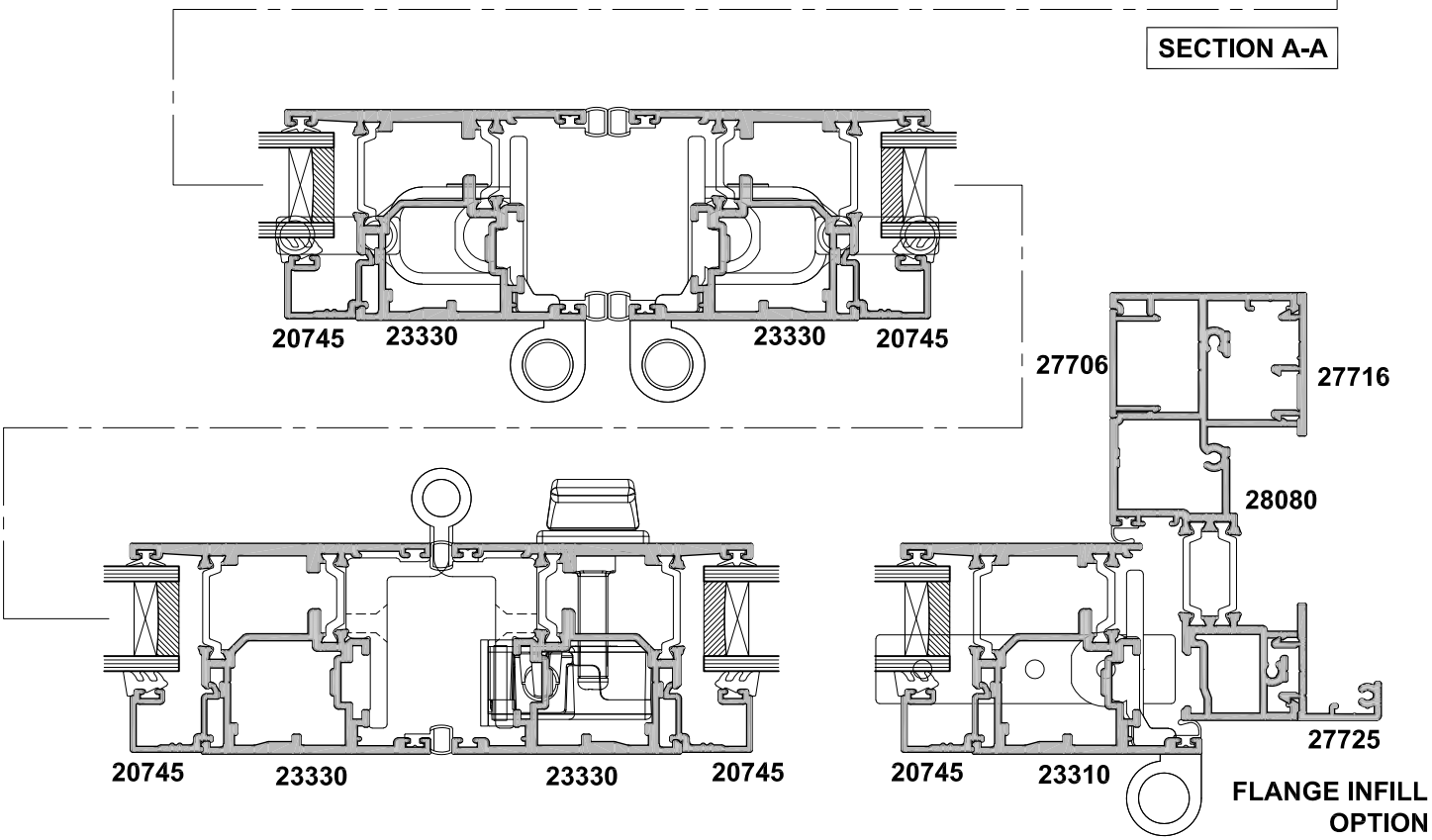

NB: Technical specification subject to change without notice