A900RS PROFILE BALUSTRADE RAIL OPTIONS

GLAZED

Cad Ref. APBA05-0 **Scale** 1:2 **Date** 01.01.09

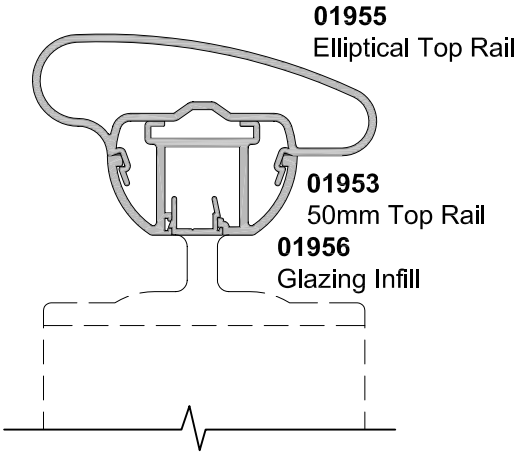

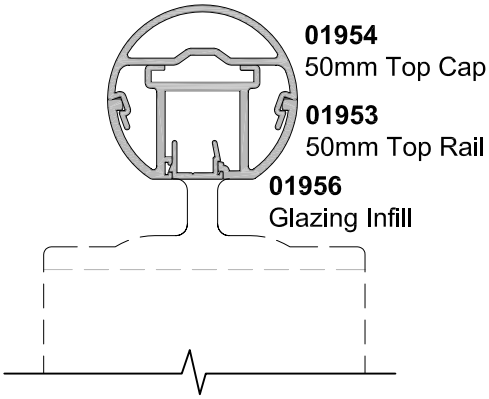

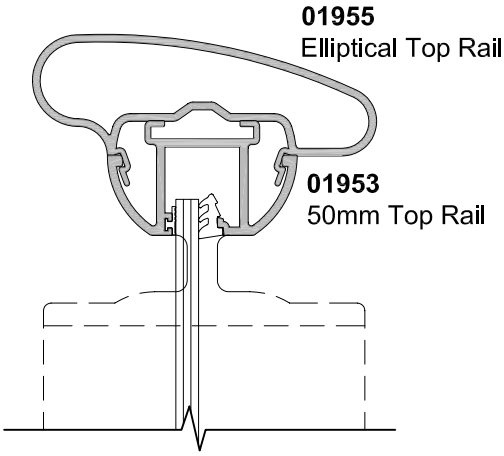

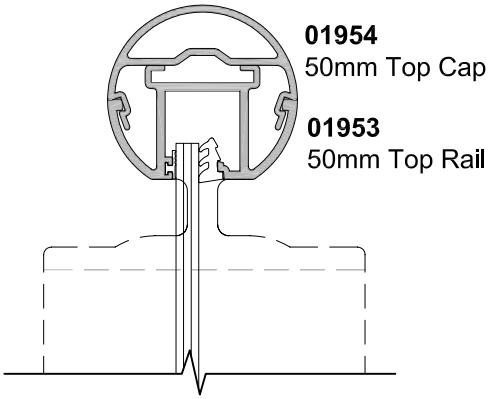

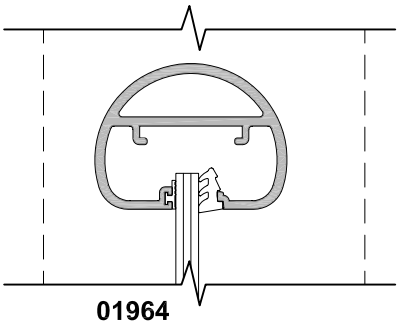

01964
50mm Bottom Rail
(as a mid Rail)

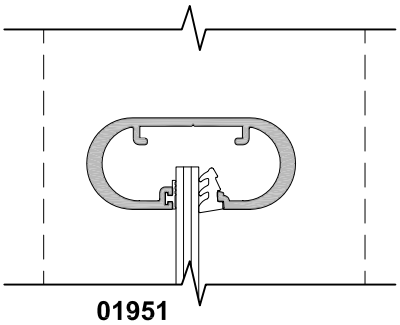

01951
55mm Bottom Rail
(as a mid Rail)

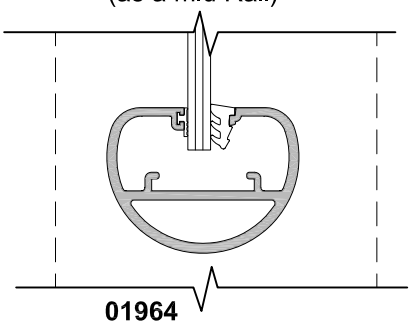

01964
50mm Bottom Rail

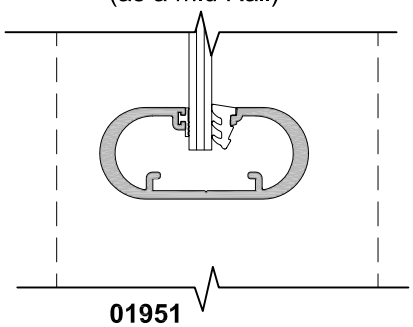

01951
55mm Bottom Rail

NB. Technical specification subject to change without notice.