METRO SERIES, A100MS AWNING WINDOW INTERNAL BOX MULLION / TRANSOM

CROSS SECTION

Cad Ref. AMAW03-0 **Scale** 1:2 **Date** 01.06.11

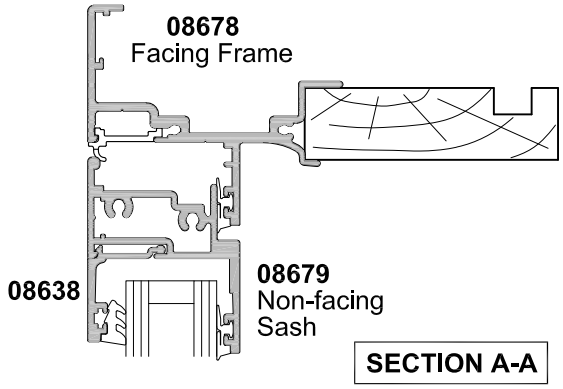

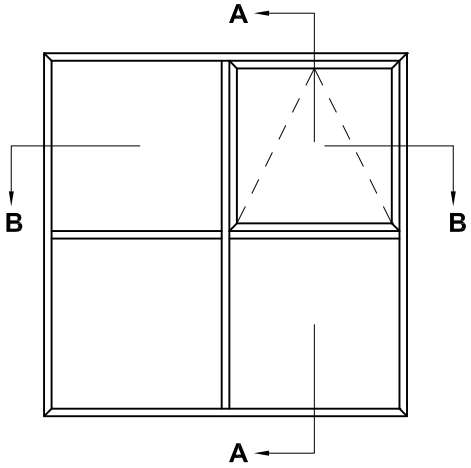

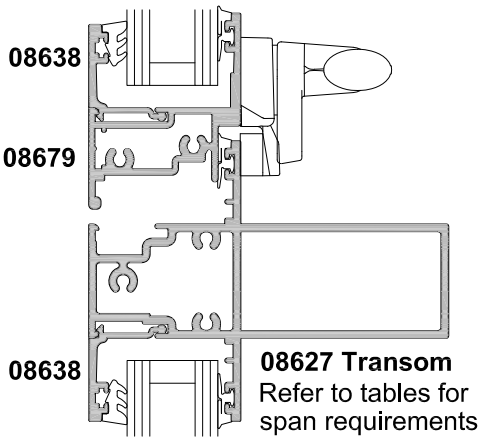

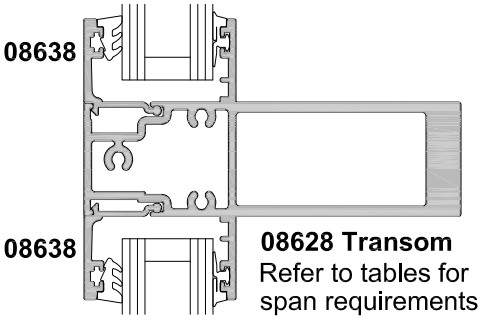

HEAVY DUTY TRANSOM OPTION

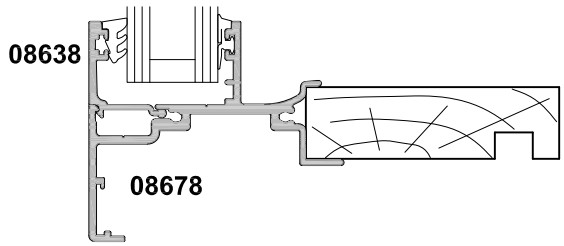

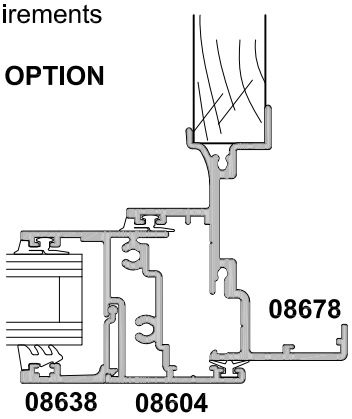
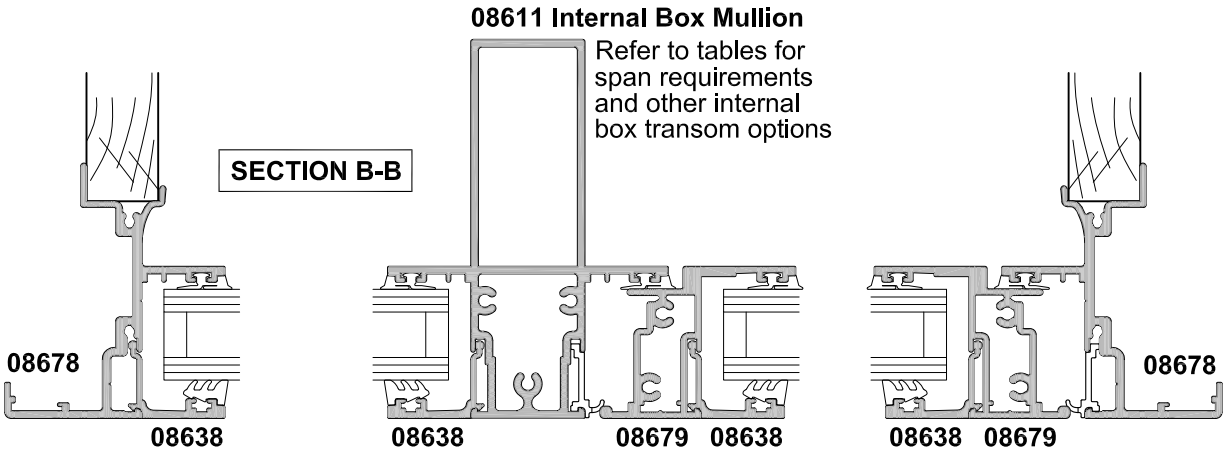
FACING SASH OPTION