40MM WINDOW SERIES
A120FS SEISMIC FRAME

CROSS SECTION

Cad Ref. AC4009-0 **Scale** 1:2 **Date** 01.01.09

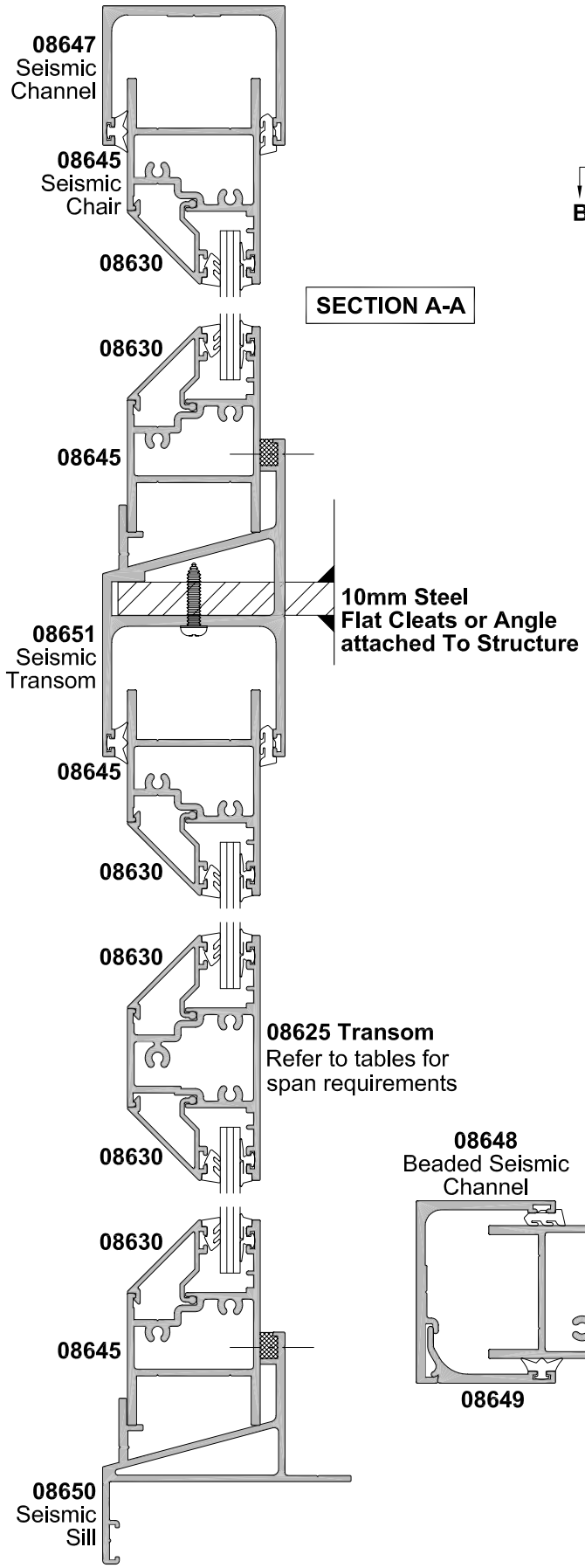

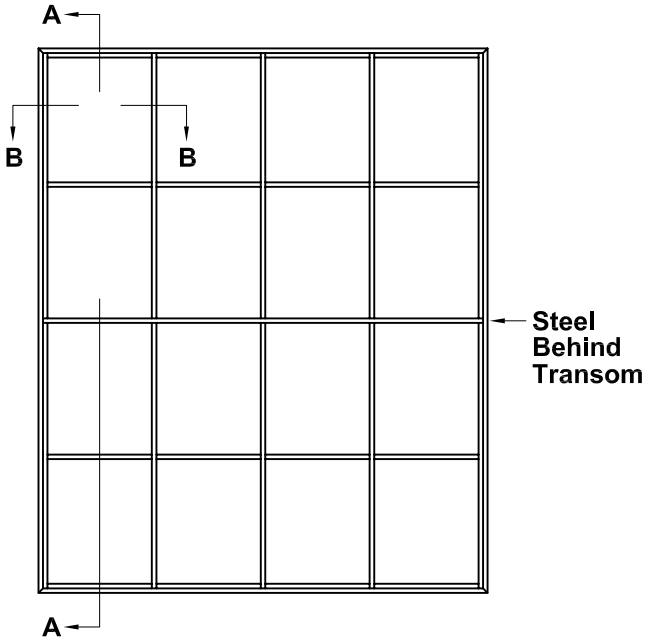

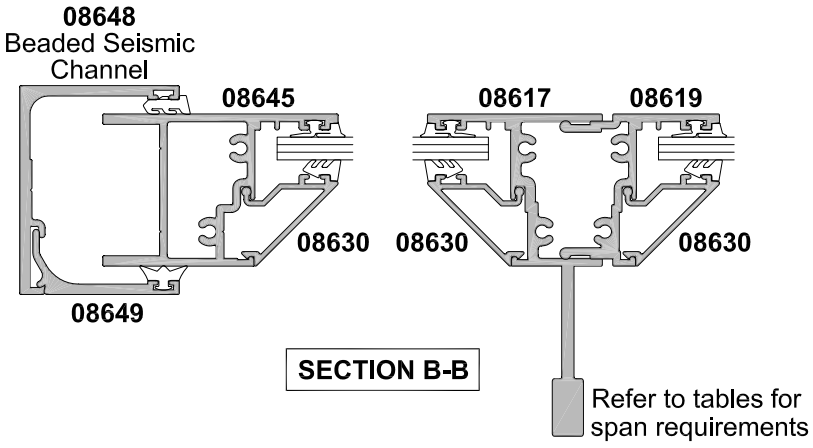

NB. Technical specification subject to change without notice.