

EPB
PLASTERBOARD
NOISE CONTROL SYSTEMS

May 2026

www. epb.co.nz

EPB® Plasterboard Noise Control Systems Manual

These publications are continuously being updated and superseded. **CURRENT VERSION DATED: November 2026**
It is important to check to ensure you have the latest publication. Call Freephone 0800 353 742.
Liability for systems and performances that are not designed and installed in accordance with this publication will not be accepted by Elephant Plasterboard (NZ) Limited.

Copyright

All the material in this document including text, diagrams, figures, patterns, pictures, tables and cad drawings are protected by copyright.

Cad Drawings

Pictures and CAD drawings may be downloaded and used in consented plans for generic references only. Elephant Plasterboard (NZ) Limited takes no liability in CAD drawing details shown. It is up to the designer and or builder to provide specific details and or building construction methods in each case. All pictures and CAD details are generic only.

Elephant Plasterboard (NZ) Limited Trademarks:

EPB® Plasterboard, Elephant Plasterboard®, Elephant Board®,
EPB® Standard, EPB FireSmart®, EPB MultiSmart®, EPB AquaSmart®, EPB CeilingSmart®, EPB BraceSmart®, EPB NoiseSmart®, EPB Smartboard®, Elephant Standard Plasterboard®, SmartRock Plasterboard®,Elephant FireSmart®, Elephant MultiSmart®, Elephant AquaSmart®, Elephant CeilingSmart® Elephant SpanSmart®, Elephant SuperSmart®, Elephant BraceSmart®, Elephant NoiseSmart®, Elephant UltraSmart®, Elephant Standard-Plus®, Elephant ImpactSmart®

All past and future references to Elephant Plasterboard and EPB® Plasterboard are interchangeable.

Product Name Change : EPB MultiSmart® Range renamed to EPB BraceSmart®/NoiseSmart®

The 10mm & 13mm EPB MultiSmart® range will now be referred to as 10mm & 13mm EPB BraceSmart®/NoiseSmart®, reflecting its dual performance in bracing and noise control applications. In addition this product will feature a new End tape for ease of identification.
This change is a part of our ongoing effort to better align product names with their function. Please note that all product specifications, performance characteristics and installation methods remain unchanged. All past and future references of EPB MultiSmart® are interchangeable with EPB BraceSmart®/NoiseSmart® and vice versa.

Elephant Plasterboard (NZ) Limited Product & System Warranty

EPB® Plasterboard wall and ceiling linings are supported by Elephant Plasterboard (NZ) Limited Quality Guarantee. This Warranty covers EPB Plasterboard products and or systems for a minimum of 10 years from the date of the purchase. Elephant Plasterboard (NZ) Limited supplies products which are warranted to be free from defects. Any products found to be defective before or after installation will be replaced and/or repaired, provided installation has been in accordance with EPB® Plasterboard's technical literature.

Freephone
0800 353 742

Email
info@epb.co.nz

Website
www.epb.co.nz

Telephone
+64 (09) 818-7706

Elephant Plasterboard (NZ) Limited
14 Bancroft Crescent, Glendene, Auckland 0602
P.O. Box 21-436, Waitakere 0650
New Zealand

CONTENTS

SYSTEM SELECTOR TABLE 4-23

INTRODUCTION 24-29

Building Acoustics
NZ Building Code Clause G6 Airborne & Impact Sound
Habitable Space
Household Unit
Impact Insulation Class
Acceptable Solution G6/ASI
Sound Transmission Class (STC)
Timber Framed Walls Fire Ratings & Noise Control
Steel Framed Walls Fire Ratings & Noise Control
Floor/Ceiling Fire Ratings & Noise Control
Timber Joists
Composite Joists
Steel Joists
Suspended Ceiling Grid
Condition of Use
Sound Transmission Class (STC)
Flanking Transmission Paths

NOMENCLATURE 30

Specification Reference - Walls
Specification Reference - Ceilings

NOISE CONTROL SYSTEMS - FULL INTERTENANCY 31-102

Timber Double Frame wall
Timber Frame with Resilient Mount
Timber Frame with Resilient Rail
Steel Double Framed wall
Steel Double Frame wall
Steel Double Frame wall with FireSmart Central Liner
Steel Frame with Resilient Mount
Steel Frame with Resilient Rail
Quiet Steel Frame
Staggered Steel Stud
Direct Fix Clip - Floor/Ceiling - Timber Joist
Suspended Grid - Floor/Ceiling
Direct Fix Clip - Floor/Ceiling - Steel Joist

NOISE CONTROL SYSTEMS - SUB INTERTENANCY 103-148

Single Timber Frame walls
Double Timber Frame walls
Single Timber Frame with Resilient Mount
Single Timber Frame with Resilient Rail
Single Steel Frame walls - Non Load Bearing
Single Steel Framed walls - Load Bearing
Double Steel Frame wall systems
Steel Frame with Resilient Rail
Quiet Steel Frame
Staggered Steel Frame
Suspended Grid - Floor/Ceiling
Direct Fix Clip - Floor/Ceiling

CONSTRUCTION DETAILS 149

Double Timber Frame Wall Details
Double Timber Frame Floor/Ceiling Junctions
Single Timber Frame Floor/Ceiling Junctions
Timber Frame with Resilient Mount Junctions
Timber Frame with Resilient Rail Junctions
Double Steel Frame Wall Junctions
Steel Frame with Resilient Rail Junctions
Steel Frame with Resilient Mount Junctions
Quiet Stud
Composite Floor Deflection Head Detail
Roof Cavity Detail
Penetration Detail
Rail and Mount Installation details
Ceiling Perimeter Details

SYSTEM COMPONENTS 180

PRODUCT RANGE 182

Full Intertenancy - Fire Rated Walls

System Number	Lining Suffix	FRR	Load Bearing Ability	Noise Control		Lining Requirements	Page
				STC	Rw		
Timber Double Frame Walls - Load Bearing							
E3TDLA30	-F30	30/30/30	LB	55	54	1 x 10mm EPB FireSmart® one side 2 x 10mm EPB FireSmart® other side	31
	-S39	30/30/30	LB	57	56	1 x 13mm EPB® Standard one side 2 x 13mm EPB® Standard other side	31
	-M30	30/30/30	LB	58	57	1 x 10mm EPB BraceSmart®/NoiseSmart® one side 2 x 10mm EPB BraceSmart®/NoiseSmart® other side	31
E4TDLA45	-S40	45/45/45	LB	58	57	2 x 10mm EPB® Standard each side	32
E2TDLA60	-M26	60/60/60	LB	55	54	1 x 13mm EPB BraceSmart®/NoiseSmart® each side	33
E3TDLA60	-MS39	60/60/60	LB	58	57	1 x 13mm EPB BraceSmart®/NoiseSmart® one side 2 x 13mm EPB® Standard other side	34
	-M33	60/60/60	LB	59	58	1 x 13mm EPB BraceSmart®/NoiseSmart® one side 2 x 10mm EPB BraceSmart®/NoiseSmart® other side	34
	-M39	60/60/60	LB	61	60	1 x 13mm EPB BraceSmart®/NoiseSmart® one side 2 x 13mm EPB BraceSmart®/NoiseSmart® other side	34
E4TDLA60	-S46	60/60/60	LB	59	58	1 x 10mm EPB® Standard and 1 x 13mm EPB® Standard each side	35
	-F40	60/60/60	LB	60	59	2 x 10mm EPB FireSmart® each side	35
	-S52	60/60/60	LB	61	60	2 x 13mm EPB® Standard each side	35
	-M40	60/60/60	LB	62	61	2 x 10mm EPB BraceSmart®/NoiseSmart® each side	35
E2TDLA75	-F32	75/75/75	LB	56	55	1 x 16mm EPB FireSmart® each side	36
E4TDLA90	-F52	90/90/90	LB	64	63	2 x 13mm EPB FireSmart® each side	37
	-M52	90/90/90	LB	67	66	2 x 13mm BraceSmart®/NoiseSmart® each side	37
Timber Double Frame Walls - EPB Plasterboard & James Hardie Villaboard™ Lining - Load Bearing							
EJV2TDLA30	-F10	30/30/30	LB	59	58	1 x 10mm EPB FireSmart® and 1 x 9mm James Hardie Villaboard™ Lining on each side	38
EJV2TDLA60	-F13	60/60/60	LB	62	61	1 x 13mm EPB FireSmart® and 1 x 9mm James Hardie Villaboard™ Lining on each side	39
Timber Single Frame Walls with Resilient Mount - Load Bearing							
E3TMLA30	-S39	30/30/30	LB	55	54	Framing Side: 1 x 13mm EPB® Standard Mount Side: 2 x 13mm EPB® Standard	40
	-M30	30/30/30	LB	56	55	Framing Side: 1 x 10mm EPB BraceSmart®/NoiseSmart® Mount Side: 2 x 10mm EPB BraceSmart®/NoiseSmart®	40
E4TMLA30	-F40	30/30/30	LB	58	57	Framing Side: 2 x 10mm EPB FireSmart® Mount Side: 2 x 10mm EPB FireSmart®	41
E4TMLA45	-S52	45/45/45	LB	61	60	Framing Side: 2 x 13mm EPB® Standard Mount Side: 2 x 13mm EPB® Standard	42
E3TMLA60	-M39	60/60/60	LB	58	57	Framing Side: 1 x 13mm EPB BraceSmart®/NoiseSmart® Mount Side: 2 x 13mm EPB BraceSmart®/NoiseSmart®	43
E4TMLA60	-M40	60/60/60	LB	62	61	Framing Side: 2 x 10mm EPB BraceSmart®/NoiseSmart® Mount Side: 2 x 10mm EPB BraceSmart®/NoiseSmart®	44
E4TMLA90	-M52	90/90/90	LB	63	62	Framing Side: 2 x 13mm EPB BraceSmart®/NoiseSmart® Mount Side: 2 x 13mm EPB BraceSmart®/NoiseSmart®	45

Full Intertenancy - Fire Rated Walls

System Number	Lining Suffix	FRR	Load Bearing Ability	Noise Control STC	Noise Control Rw	Lining Requirements	Page
Timber Single Frame Walls with Resilient Rail - Load Bearing							
E4TRLA45	-S52	45/45/45	LB	55	54	Framing Side: 2 x 13mm EPB® Standard Rail Side: 2 x 13mm EPB® Standard	46
E4TRLA60	-M40	60/60/60	LB	55	54	Framing Side: 2 x 10mm EPB BraceSmart®/NoiseSmart® Rail Side: 2 x 10mm EPB BraceSmart®/NoiseSmart®	47
E4TRLA90	-F52	90/90/90	LB	56	55	Framing Side: 2 x 13mm EPB FireSmart® Rail Side: 2 x 13mm EPB FireSmart®	48
	-M52	90/90/90	LB	57	56	Framing Side: 2 x 13mm EPB BraceSmart®/NoiseSmart® Rail Side: 2 x 13mm EPB BraceSmart®/NoiseSmart®	48
Steel Double Frame Walls - Non Load Bearing							
E3SDA30	-S39	-/30/30	NLB	55	54	1 x 13mm EPB® Standard one side 2 x 13mm EPB® Standard other side	50
	-M30	-/30/30	NLB	56	55	1 x 10mm EPB BraceSmart®/NoiseSmart® one side 2 x 10mm EPB BraceSmart®/NoiseSmart® other side	50
E4SDA45	-F40	-/45/45	NLB	58	57	2 x 10mm EPB FireSmart® each side	51
E2SDA60	-M26	-/60/60	NLB	55	54	1 x 13mm EPB BraceSmart®/NoiseSmart® each side	52
E3SDA60	-MS39	-/60/60	NLB	57	56	1 x 13mm EPB BraceSmart®/NoiseSmart® one side 2 x 13mm EPB® Standard other side	53
	-FM33	-/60/60	NLB	58	57	1 x 13mm EPB FireSmart® one side 2 x 10mm EPB BraceSmart®/NoiseSmart® other side	53
	-M33	-/60/60	NLB	58	57	1 x 13mm EPB BraceSmart®/NoiseSmart® one side 2 x 10mm EPB BraceSmart®/NoiseSmart® other side	53
	-M39	-/60/60	NLB	61	60	1 x 13mm EPB BraceSmart®/NoiseSmart® one side 2 x 13mm EPB BraceSmart®/NoiseSmart® other side	53
E4SDA60	-S52	-/60/60	NLB	61	60	2 x 13mm EPB® Standard each side	54
	-M40	-/60/60	NLB	61	60	2 x 10mm EPB BraceSmart®/NoiseSmart® each side	54
E2SDA75	-F32	-/75/75	NLB	56	55	1 x 16mm EPB FireSmart® each side	55
E4SDA75	-MS52	-/75/75	NLB	63	62	1 x 13mm EPB® Standard and 1x13mm EPB BraceSmart®/NoiseSmart® each side	56
E4SDA90	-F52	-/90/90	NLB	62	61	2 x 13mm EPB FireSmart® each side	57
	-M52	-/90/90	NLB	65	64	2 x 13mm EPB BraceSmart®/NoiseSmart® each side	57

Full Intertenancy - Fire Rated Walls

System Number	Lining Suffix	FRR	Load Bearing Ability	Noise Control		Lining Requirements	Page
				STC	Rw		
Steel Double Frame Walls - Load Bearing							
E2SDLA30	-M26	30/30/30	LB	55	54	1 x 13mm EPB BraceSmart®/NoiseSmart® each side	58
	-F32	30/30/30	LB	56	55	1 x 16mm EPB FireSmart® each side	58
E3SDLA30	-MF33	30/30/30	LB	58	57	1 x 13mm EPB BraceSmart®/NoiseSmart® one side 2 x 10mm EPB FireSmart® other side	59
	-M39	30/30/30	LB	61	60	1 x 13mm EPB BraceSmart®/NoiseSmart® one side 2 x 13mm EPB BraceSmart®/NoiseSmart® other side	59
E4SDLA30	-F40	30/30/30	LB	59	58	2 x 10mm EPB FireSmart® each side	60
E4SDLA45	-S52	45/45/45	LB	61	60	2 x 13mm EPB® Standard each side	61
	-M40	45/45/45	LB	61	60	2 x 10mm EPB BraceSmart®/NoiseSmart® each side	61
E4SDLA60	-M52	60/60/60	LB	65	64	2 x 13mm EPB BraceSmart®/NoiseSmart® each side	62
E4SDLA90	-F64	90/90/90	LB	66	65	2 x 16mm EPB FireSmart® each side	63
Steel Double Frame Walls with FireSmart Central Liner - Non Load Bearing							
E4CSDA60	-FS46	-/60/60	NLB	56	56	1 x 13mm EPB FireSmart® and 1 x 10mm EPB® Standard each side	64
	-FS52	-/60/60	NLB	57	58	1 x 13mm EPB FireSmart® and 1 x 13mm EPB® Standard each side	64
Steel Frame Walls with Resilient Mount - Non Load Bearing							
E3SMA30	-M30	-/30/30	NLB	55	54	Frame Side: 1 x 10mm EPB BraceSmart®/NoiseSmart® Mount Side: 2 x 10mm EPB BraceSmart®/NoiseSmart®	66
E4SMA30	-F40	-/30/30	NLB	56	55	Frame Side: 2 x 10mm EPB FireSmart® Mount Side: 2 x 10mm EPB FireSmart®	67
E3SMA60	-MS39	-/60/60	NLB	56	55	Frame Side: 1 x 13mm EPB BraceSmart®/NoiseSmart® Mount Side: 2 x 13mm EPB® Standard	68
	-M39	-/60/60	NLB	57	56	Frame Side: 1 x 13mm EPB BraceSmart®/NoiseSmart® Mount Side: 2 x 13mm EPB BraceSmart®/NoiseSmart®	68
E4SMA60	-S52	-/60/60	NLB	58	57	Frame Side: 2 x 13mm EPB® Standard Mount Side: 2 x 13mm EPB® Standard	69
	-M40	-/60/60	NLB	59	58	Frame Side: 2 x 10mm EPB BraceSmart®/NoiseSmart® Mount Side: 2 x 10mm EPB BraceSmart®/NoiseSmart®	69
E4SMA90	-M46	-/90/90	NLB	60	59	Frame Side: 1 x 13mm and 1 x 10mm EPB BraceSmart®/NoiseSmart® Mount Side: 1 x 13mm and 1 x 10mm EPB BraceSmart®/NoiseSmart®	70
	-M52	-/90/90	NLB	62	61	Frame Side: 2 x 13mm EPB BraceSmart®/NoiseSmart® Mount Side: 2 x 13mm EPB BraceSmart®/NoiseSmart®	70
Steel Frame Walls with Resilient Rail - Non Load Bearing							
E4SRA60	-S52	-/60/60	NLB	55	54	Frame Side: 2 x 13mm EPB® Standard Rail Side: 2 x 13mm EPB® Standard	71
	-M40	-/60/60	NLB	56	55	Frame Side: 2 x 10mm EPB BraceSmart®/NoiseSmart® Rail Side: 2 x 10mm EPB BraceSmart®/NoiseSmart®	71
E4SRA90	-M46	-/90/90	NLB	57	56	Frame Side: 1 x 13mm and 1 x 10mm EPB BraceSmart®/NoiseSmart® Rail Side: 1 x 13mm and 1 x 10mm EPB BraceSmart®/NoiseSmart®	72
	-F52	-/90/90	NLB	57	56	Frame Side: 2 x 13mm EPB FireSmart® Rail Side: 2 x 13mm EPB FireSmart®	72
	-M52	-/90/90	NLB	59	58	Frame Side: 2 x 13mm EPB BraceSmart®/NoiseSmart® Rail Side: 2 x 13mm EPB BraceSmart®/NoiseSmart®	72

Full Intertenancy - Fire Rated Walls

System Number	Lining Suffix	FRR	Load Bearing Ability	Noise Control		Lining Requirements	Page
				STC	Rw		
Quiet Steel Frame Walls - Non Load Bearing							
E4SQA30	-F40	-/30/30	NLB	55	54	2 x 10mm EPB FireSmart® each side	73
E4SQA45	-S46	-/45/45	NLB	56	55	1x 10mm EPB® Standard and 1 x 13mm EPB® Standard each side	74
E3SQA60	-M33	-/60/60	NLB	55	54	1 x 13mm EPB BraceSmart®/NoiseSmart® one side 2 x 10mm EPB BraceSmart®/NoiseSmart® other side	75
	-M36	-/60/60	NLB	55	54	1 x 13mm EPB BraceSmart®/NoiseSmart® one side 1 x 10mm and 1 x 13mm EPB BraceSmart®/NoiseSmart® other side	75
	-M39	-/60/60	NLB	57	56	1 x 13mm EPB BraceSmart®/NoiseSmart® one side 2 x 13mm EPB BraceSmart®/NoiseSmart® other side	75
E4SQA60	-S52	-/60/60	NLB	57	56	2 x 13mm EPB® Standard each side	76
	-M40	-/60/60	NLB	57	56	2 x 10mm EPB BraceSmart®/NoiseSmart® each side	76
	-M52	-/60/60	NLB	61	60	2 x 13mm EPB BraceSmart®/NoiseSmart® each side	76
E4SQA75	-MS52	-/75/75	NLB	59	58	1 x13mm EPB BraceSmart®/NoiseSmart® and 1x13mm EPB® Standard each side	78
E4SQA90	-M46	-/90/90	NLB	59	58	1 x 10mm and 1 x 13mm EPB BraceSmart®/NoiseSmart® each side	79
	-M52	-/90/90	NLB	61	60	2 x 13mm EPB BraceSmart®/NoiseSmart® each side	79
Staggered Steel Stud Walls - Non Load Bearing							
E3SSA30	-S39	-/30/30	NLB	55	54	1 x 13mm EPB® Standard on One side 2 x 13mm EPB® Standard on Other side	80
E4SSA45	-F40	-/45/45	NLB	56	55	2 x 10mm EPB FireSmart® each side	81
E3SSA60	-MS39	-/60/60	NLB	56	55	1 x 13mm EPB BraceSmart®/NoiseSmart® one side 2 x 13mm EPB® Standard other side	82
	-M39	-/60/60	NLB	57	56	1 x 13mm EPB BraceSmart®/NoiseSmart® one side 2 x 13mm EPB BraceSmart®/NoiseSmart® other side	82
E4SSA60	-S52	-/60/60	NLB	59	58	2 x 13mm EPB® Standard each side	83
E4SSA90	-M46	-/90/90	NLB	59	58	1 x 10mm and 1 x 13mm EPB BraceSmart®/NoiseSmart® each side	84
	-M52	-/90/90	NLB	62	61	2 x 13mm EPB BraceSmart®/NoiseSmart® each side	84

Full Intertenancy - Fire Rated Floor/Ceilings

System Number	Lining Suffix	FRR	Load Bearing Ability	Noise Control			Lining Requirements	Page
				STC	Rw	IIC		
Direct Fix Clip - Floating Floor/Ceiling - Timber Joist								
EFJ2DFA60	-FS26	60/60/60	LB	66	65	57-76	1 x 13mm EPB FireSmart® and 1 x 13mm EPB® Standard	86
	-F26	60/60/60	LB	67	66	57-76	2 x 13mm EPB FireSmart®	86
	-M26	60/60/60	LB	68	67	57-77	2 x 13mm EPB BraceSmart®/NoiseSmart®	86
EFP2DFA60	-FS26	60/60/60	LB	63	62	55-72	1 x 13mm EPB FireSmart® and 1 x 13mm EPB® Standard	88
	-F26	60/60/60	LB	64	63	55-72	2 x 13mm EPB FireSmart®	88
	-M26	60/60/60	LB	65	64	56-72	2 x 13mm EPB BraceSmart®/NoiseSmart®	88
Direct Fix Clip - Floating Floor/Ceiling - Steel Joist								
EFJ2DFsA45	-F26	45/45/45	LB	66	65	56-76	2 x 13mm EPB FireSmart®	90
	-M26	45/45/45	LB	67	66	56-76	2 x 13mm EPB BraceSmart®/NoiseSmart®	90
EFP2DFsA45	-F26	45/45/45	LB	63	62	55-72	2 x 13mm EPB FireSmart®	92
	-M26	45/45/45	LB	64	63	55-72	2 x 13mm EPB BraceSmart®/NoiseSmart®	92
EFJ2DFsA60	-F29	60/60/60	LB	67	66	56-76	1 x 13mm EPB FireSmart® and 1 x 16mm EPB FireSmart®	94
EFP2DFsA60	-F29	60/60/60	LB	64	63	56-72	1 x 13mm EPB FireSmart® and 1 x 16mm EPB FireSmart®	96
Direct Fix Clip - Floor/Ceiling - Timber Joist								
E2DFA60	-FS26	60/60/60	LB	56	55	46-73	1 x 13mm EPB FireSmart® and 1 x 13mm EPB® Standard	98
	-F26	60/60/60	LB	57	56	46-73	2 x 13mm EPB FireSmart®	98
	-M26	60/60/60	LB	58	57	46-73	2 x 13mm EPB BraceSmart®/NoiseSmart®	98
E2DFA90	-FM29	90/90/90	LB	57	56	47-73	1 x 16mm EPB FireSmart® and 1 x 13mm EPB BraceSmart®/NoiseSmart®	99
	-F32	90/90/90	LB	58	57	47-73	2 x 16mm EPB FireSmart®	99
Suspended Grid Floor/Ceiling - Timber Joist								
E2SCA60	-MS26	60/60/60	LB	56	55	40-72	1 x 13mm EPB BraceSmart®/NoiseSmart® and 1 x 13mm EPB® Standard	100
	-F26	60/60/60	LB	56	55	40-72	2 x 13mm EPB FireSmart®	100
	-M26	60/60/60	LB	56	55	40-72	2 x 13 EPB BraceSmart®/NoiseSmart®	100
E2SCA75	-F29	75/75/75	LB	57	56	47-72	1 x 16mm EPB FireSmart® and 1 x 13mm EPB FireSmart®	101
E2SCA90	-F32	90/90/90	LB	57	56	40-73	2 x 16mm EPB FireSmart®	102
Direct Fix Clip - Floor/Ceiling - Steel Joist								
E2DFsA45	-F26	45/45/45	LB	56	55	47-74	2 x 13mm EPB FireSmart®	103
	-M26	45/45/45	LB	57	56	47-74	2 x 13mm EPB BraceSmart®/NoiseSmart®	103
E2DFsA60	-FM29	60/60/60	LB	57	56	47-75	1 x 16mm EPB FireSmart® and 1 x 13mm EPB BraceSmart®/NoiseSmart®	104
	-F32	60/60/60	LB	57	56	47-75	2 x 16mm EPB FireSmart®	104

Sub Intertenancy - Walls

System Number	Lining Suffix	FRR	Load Bearing Ability	Noise Control		Lining Requirements	Page
				STC	Rw		
Single Timber Frame Walls - Load Bearing							
E2TLa30	-S20	30/30/30	LB	39	38	1 x 10mm EPB® Standard each side	106
	-S26	30/30/30	LB	40	39	1 x 13mm EPB® Standard each side	106
	-M20	30/30/30	LB	41	40	1 x 10mm EPB BraceSmart®/NoiseSmart® each side	106
E3TLa30	-S30	30/30/30	LB	42	41	1 x 10mm EPB® Standard one side 2 x 10mm EPB® Standard other side	107
	-S39	30/30/30	LB	43	42	1 x 13mm EPB® Standard one side 2 x 13mm EPB® Standard other side	107
	-M30	30/30/30	LB	44	43	1 x 10mm EPB BraceSmart®/NoiseSmart® on One side 2 x 10mm EPB BraceSmart®/NoiseSmart® on Other side	107
E4TLa45	-S40	45/45/45	LB	44	43	2 x 10mm EPB® Standard each side	108
E2TLa60	-M26	60/60/60	LB	42	41	1 x 13mm EPB BraceSmart®/NoiseSmart® each side	109
E3TLa60	-MS39	60/60/60	LB	45	44	1 x 13mm EPB BraceSmart®/NoiseSmart® one side 2 x 13mm EPB® Standard other side	110
	-M33	60/60/60	LB	45	44	1 x 13mm EPB BraceSmart®/NoiseSmart® one side 2 x 10mm EPB BraceSmart®/NoiseSmart® other side	110
	-M39	60/60/60	LB	46	45	1 x 13mm EPB BraceSmart®/NoiseSmart® one side 2 x 13mm EPB BraceSmart®/NoiseSmart® other side	110
E4TLa60	-S46	60/60/60	LB	45	44	1 x 10mm EPB® Standard and 1 x 13mm EPB® Standard each side	111
	-S52	60/60/60	LB	46	45	2 x 13mm EPB® Standard each side	111
	-M40	60/60/60	LB	46	45	2 x 10mm EPB BraceSmart®/NoiseSmart® each side	111
E4TLa90	-M52	90/90/90	LB	48	47	2 x 13mm EPB BraceSmart®/NoiseSmart® each side	112
Double Timber Frame Walls - Load Bearing							
E2TDLa30	-S20	30/30/30	LB	50	49	1 x 10mm EPB® Standard each side	113
	-S26	30/30/30	LB	52	51	1 x 13mm EPB® Standard each side	113
	-M20	30/30/30	LB	52	51	1 x 10mm EPB BraceSmart®/NoiseSmart® each side	113
Single Timber Frame Walls with Resilient Mount- Load Bearing							
E3TMLa30	-S30	30/30/30	LB	52	51	Frame Side: 1 x 10mm EPB® Standard Mount Side: 2 x 10mm EPB® Standard	114
Single Timber Frame Walls with Resilient Rail- Load Bearing							
E3TRLa30	-S30	30/30/30	LB	47	46	Frame Side: 1 x 10mm EPB® Standard Rail Side: 2 x 10mm EPB® Standard	115
	-S39	30/30/30	LB	50	49	Frame Side: 1 x 13mm EPB® Standard Rail Side: 2 x 13mm EPB® Standard	115
	-M30	30/30/30	LB	51	50	Frame Side: 1 x 10mm EPB BraceSmart®/NoiseSmart® Rail Side: 2 x 10mm EPB BraceSmart®/NoiseSmart®	115
E3TRLa60	-MS39	60/60/60	LB	52	50	Frame Side: 1 x 13mm EPB BraceSmart®/NoiseSmart® Rail Side: 2 x 13mm EPB® Standard	116
	-M39	60/60/60	LB	52	51	Frame Side: 1 x 13mm EPB BraceSmart®/NoiseSmart® Rail Side: 2 x 13mm EPB BraceSmart®/NoiseSmart®	116

Sub Intertenancy - Walls

System Number	Lining Suffix	FRR	Load Bearing Ability	Noise Control		Lining Requirements	Page
				STC	Rw		
Single Steel Frame Walls - Non Load Bearing							
E2Sa15	-S20	-/15/15	NLB	40	39	1 x 10mm EPB® Standard each side	118
E2Sa30	-S26	-/30/30	NLB	41	40	1 x 13mm EPB® Standard each side	119
	-M20	-/30/30	NLB	42	41	1 x 10mm EPB BraceSmart®/NoiseSmart® each side	119
E3Sa30	-S33	-/30/30	NLB	43	42	1 x 13mm EPB® Standard one side 2 x 10mm EPB® Standard other side	120
	-S39	-/30/30	NLB	44	42	1 x 13mm EPB® Standard one side 2 x 13mm EPB® Standard other side	120
	-M30	-/30/30	NLB	44	43	1 x 10mm EPB BraceSmart®/NoiseSmart® one side 2 x 10mm EPB BraceSmart®/NoiseSmart® other side	120
E4Sa45	-S40	-/45/45	NLB	45	44	2 x 10mm EPB® Standard each side	121
E2Sa60	-M26	-/60/60	NLB	43	42	1 x 13mm EPB BraceSmart®/NoiseSmart® each side	122
E3Sa60	-MS39	-/60/60	NLB	44	43	1 x 13mm EPB BraceSmart®/NoiseSmart® one side 2 x 13mm EPB® Standard other side	123
	-M39	-/60/60	NLB	45	44	1 x 13mm EPB BraceSmart®/NoiseSmart® one side 2 x 13mm EPB BraceSmart®/NoiseSmart® other side	123
E4Sa60	-S46	-/60/60	NLB	46	45	1 x 10mm EPB® Standard and 1 x 13mm EPB® Standard each side	124
	-S52	-/60/60	NLB	48	47	2 x 13mm EPB® Standard each side	124
	-M40	-/60/60	NLB	48	47	2 x 10mm EPB BraceSmart®/NoiseSmart® each side	124
E4Sa90	-M46	-/90/90	NLB	50	49	1 x 10mm and 1 x 13mm EPB BraceSmart®/NoiseSmart® each side	125
E4Sa105	-M52	-/105/105	NLB	52	51	2 x 13mm EPB BraceSmart®/NoiseSmart® each side	126
Single Steel Frame Walls - Load Bearing							
E2SLa30	-M26	30/30/30	LB	43	42	1 x 13mm EPB BraceSmart®/NoiseSmart® each side	127
E3SLa30	-M39	30/30/30	LB	45	44	1 x 13mm EPB BraceSmart®/NoiseSmart® one side 2 x 13mm EPB BraceSmart®/NoiseSmart® other side	128
E4SLa30	-S40	30/30/30	LB	45	44	2 x 10mm EPB® Standard each side	129
E4SLa45	-S52	45/45/45	LB	48	47	2 x 13mm EPB® Standard each side	130
	-M40	45/45/45	LB	48	47	2 x 10mm EPB BraceSmart®/NoiseSmart® each side	130
E4SLa60	-M52	60/60/60	LB	52	51	2 x 13mm EPB BraceSmart®/NoiseSmart® each side	131
E4SLa90	-F64	90/90/90	LB	53	52	2 x 16mm EPB FireSmart® each side	132
Double Steel Frame Walls - Non Load Bearing							
E2SDa30	-S26	-/30/30	NLB	52	51	1 x 13mm EPB® Standard each side	133
	-M20	-/30/30	NLB	52	51	1 x 10mm EPB BraceSmart®/NoiseSmart® each side	133

Sub Intertenancy - Walls

System Number	Lining Suffix	FRR	Load Bearing Ability	Noise Control		Lining Requirements	Page
				STC	Rw		
Steel Frame Walls with Resilient Rail- Non Load Bearing							
E3SRa30	-S39	-/30/30	NLB	51	50	Frame Side: 1 x 13mm EPB® Standard Rail Side: 2 x 13mm EPB® Standard	134
	-M30	-/30/30	NLB	51	50	Frame Side: 1 x 10mm EPB BraceSmart®/NoiseSmart® Rail Side: 2 x 10mm EPB BraceSmart®/NoiseSmart®	134
E3SRa60	-MS39	-/60/60	NLB	52	51	Frame Side: 1 x 13mm EPB BraceSmart®/NoiseSmart® Rail Side: 2 x 13mm EPB® Standard	135
	-M39	-/60/60	NLB	53	52	Frame Side: 1 x 13mm EPB BraceSmart®/NoiseSmart® Rail Side: 2 x 13mm EPB BraceSmart®/NoiseSmart®	135
Quiet Steel Frame Walls - Non Load Bearing							
E2SQa30	-S26	-/30/30	NLB	47	46	1 x 13mm EPB® Standard each side	136
	-M20	-/30/30	NLB	48	47	1 x 10mm EPB BraceSmart®/NoiseSmart® each side	136
E3SQa30	-S39	-/30/30	NLB	53	52	1 x 13mm EPB® Standard one side 2 x 13mm EPB® Standard other side	137
	-M30	-/30/30	NLB	53	52	1 x 10mm EPB BraceSmart®/NoiseSmart® one side 2 x 10mm EPB BraceSmart®/NoiseSmart® other side	137
E3SQa45	-MS33	-/45/45	NLB	52	51	1 x 13mm EPB BraceSmart®/NoiseSmart® one side 2 x 10mm EPB® Standard other side	138
E2SQa60	-M26	-/60/60	NLB	50	49	1 x 13mm EPB BraceSmart®/NoiseSmart® each side	139
Staggered Steel Stud Walls - Non Load Bearing							
E2SSa30	-S26	-/30/30	NLB	50	49	1 x 13mm EPB® Standard each side	140
	-M20	-/30/30	NLB	49	48	1 x 10mm EPB BraceSmart®/NoiseSmart® each side	140
E2SSa60	-M26	-/60/60	NLB	52	51	1 x 13mm EPB BraceSmart®/NoiseSmart® each side	141
	-F32	-/60/60	NLB	54	53	1 x 16mm EPB FireSmart® each side	141

Sub Intertenancy - Floor/Ceilings

System Number	Lining Suffix	FRR	Load Bearing Ability	Noise Control			Lining Requirements	Page
				STC	Rw	IIC		
Direct Fix Clip - Floor/Ceiling								
E1DFa15	-S13	15/15/15	LB	48	47	43-69	1 x 13mm EPB® Standard	143
E2DFa30	-S26	30/30/30	LB	53	52	43-69	2 x 13mm EPB® Standard	144
E1DFa45	-M13	45/45/45	LB	52	51	43-69	1 x 13mm EPB BraceSmart®/NoiseSmart®	145
E1DFa60	-F16	60/60/60	LB	52	51	43-69	1 x 16mm EPB FireSmart®	146
Suspended Grid Floor/Ceiling								
E1SCa15	-S13	15/15/15	LB	48	47	39-62	1 x 13mm EPB® Standard	147
E2SCa30	-S26	30/30/30	LB	53	52	42-67	2 x 13mm EPB® Standard	148
E1SCa45	-M13	45/45/45	LB	51	50	43-69	1 x 13mm EPB BraceSmart®/NoiseSmart®	149
E1SCa60	-F16	60/60/60	LB	52	51	43-69	1 x 16mm EPB FireSmart®	150



For construction of Two way Fire Rated intertenancy walls using EPB Plasterboard in combination with 25mm thick shaftliner barrier, go to

EPB Plasterboard & Shaftliner Barrier Systems for Terraced Homes

Full Intertenancy - Fire Rated Walls

System Number	Lining Suffix	Fire Rating	Load Bearing Ability	Noise Control		Lining Requirements	Page
				STC	Rw		
Timber Double Frame Walls with 25mm GIB Barrierline® - Load Bearing							
EGB2TDLA60	-S26	60/60/60	LB	62	61	1 x 13mm EPB® Standard each side	
	-M20	60/60/60	LB	64	63	1 x 10mm EPB BraceSmart®/NoiseSmart® each side	
	-M26	60/60/60	LB	67	66	1 x 13mm EPB BraceSmart®/NoiseSmart® each side	
EGB4TDLA60	-S40	60/60/60	LB	69	68	2 x 10mm EPB® Standard each side	
Timber Double Frame Walls with 25mm USG Boral Shaftliner™ - Load Bearing							
EUL2TDLA60	-S26	60/60/60	LB	62	61	1 x 13mm EPB® Standard each side	
	-M20	60/60/60	LB	64	63	1 x 10mm EPB BraceSmart®/NoiseSmart® each side	
	-M26	60/60/60	LB	67	66	1 x 13mm EPB BraceSmart®/NoiseSmart® each side	
EUL4TDLA60	-S40	60/60/60	LB	69	68	2 x 10mm EPB® Standard each side	
Steel Double Frame Walls with 25mm GIB Barrierline® - Load Bearing							
EGB2SDLA60	-S26	60/60/60	LB	61	60	1 x 13mm EPB® Standard each side	
	-M26	60/60/60	LB	67	66	1 x 13mm EPB BraceSmart®/NoiseSmart® each side	
EGB3SDLA60	-S39	60/60/60	LB	67	66	1 x 13mm EPB® Standard one side 2 x 13mm EPB® Standard other side	
	-M39	60/60/60	LB	69	68	1 x 13mm EPB BraceSmart®/NoiseSmart® one side 2 x 13mm EPB BraceSmart®/NoiseSmart® other side	
Steel Double Frame Walls with 25mm USG Boral Shaftliner™ - Non Load Bearing							
EUL2SDA60	-S26	-/60/60	NLB	59	60	1 x 13mm EPB® Standard each side	
	-M26	-/60/60	NLB	64	63	1 x 13mm EPB BraceSmart®/NoiseSmart® each side	
EUL3SDA60	-S39	-/60/60	NLB	64	63	1 x 13mm EPB® Standard one side 2 x 13mm EPB® Standard other side	
	-M39	-/60/60	NLB	66	65	1 x 13mm EPB BraceSmart®/NoiseSmart® one side 2 x 13mm EPB BraceSmart®/NoiseSmart® other side	

Please refer EPB Plasterboard & Shaftliner Barrier Systems Manual for these System Specification sheets

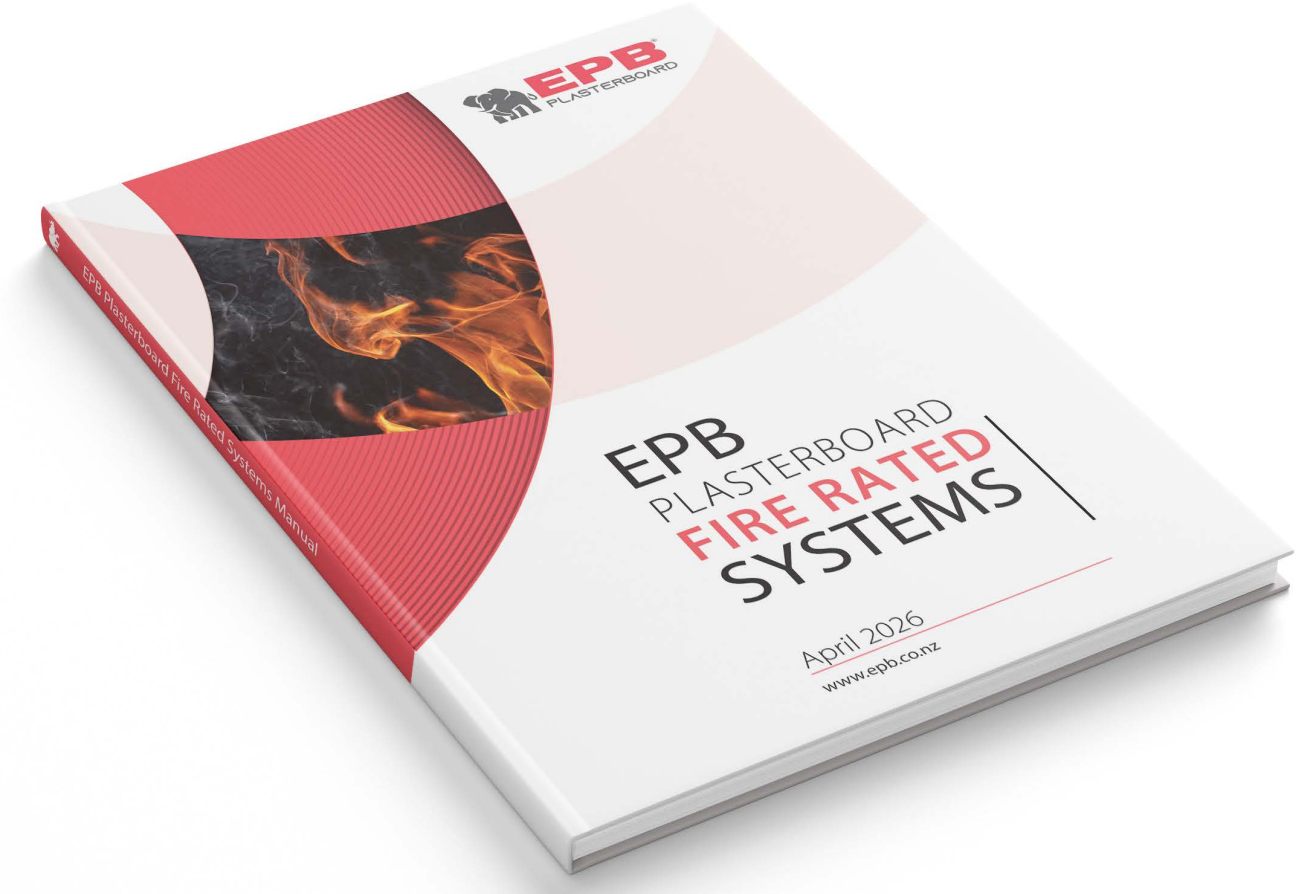

For Non-Acoustic Fire Rated system options, go to

EPB Plasterboard Fire Rated Systems Manual

Fire Rated Walls

System Number	Lining Suffix	FRR	Load Bearing Ability	Noise Control		Lining Requirements	Page
				STC	Rw		
Timber Frame Walls - Two Way FRR							
E2TL30	-S20	30/30/30	LB	37	36	1 x 10mm EPB® Standard each side	
	-F20	30/30/30	LB	37	36	1 x 10mm EPB FireSmart® each side	
	-S26	30/30/30	LB	37	36	1 x 13mm EPB® Standard each side	
E4TL45	-S40	45/45/45	LB	42	41	2 x 10mm EPB® Standard each side	
E4T60	-S40	-/60/60	NLB	42	41	2 x 10mm EPB® Standard each side	
E2TL60	-F26	60/60/60	LB	38	37	1 x 13mm EPB FireSmart® each side	
E4TL60	-F40	60/60/60	LB	42	41	2 x 10mm EPB FireSmart® each side	
	-S46	60/60/60	LB	42	41	1 x 10mm EPB® Standard and 1 x 13mm EPB® Standard each side	
	-S52	60/60/60	LB	43	42	2 x 13mm EPB® Standard each side	
E2TL75	-F32	75/75/75	LB	38	37	1 x 16mm EPB FireSmart® each side	
E4T90	-FS52	-/90/90	NLB	43	42	1 x 13mm EPB FireSmart® and 1 x 13mm EPB® Standard each side	
E4TL90	-F52	90/90/90	LB	45	44	2 x 13mm EPB FireSmart® each side	
E4T105	-F52	-/105/105	NLB	44	43	2 x 13mm EPB FireSmart® each side	
E4T120	-F58	-/120/120	NLB	46	45	1 x 16mm EPB FireSmart® and 1 x 13mm EPB FireSmart® each side	
E6TL120	-F78	120/120/120	LB	44	43	3 x 13mm EPB FireSmart® each side	
Steel Frame Walls - Two Way FRR							
E2SL15	-S26	15/15/15	LB	35	34	1 x 13mm EPB® Standard each side	
E2S30	-S26	-/30/30	NLB	35	34	1 x 13mm EPB® Standard each side	
E2SL30	-F26	30/30/30	LB	37	36	1 x 13mm EPB FireSmart® each side	
	-F32	30/30/30	LB	37	36	1 x 16mm EPB FireSmart® each side	
E4SL30	-F40	30/30/30	LB	43	42	2 x 10mm EPB FireSmart® each side	
	-S52	30/30/30	LB	43	42	2 x 13mm EPB® Standard each side	
E2S60	-F26	-/60/60	NLB	37	36	1 x 13mm EPB FireSmart® each side	
E4S60	-S52	-/60/60	NLB	45	44	2 x 13mm EPB® Standard each side	
E4SL60	-F52	60/60/60	LB	46	45	2 x 13mm EPB FireSmart® each side	
E2S75	-F32	-/75/75	NLB	38	37	1 x 16mm EPB FireSmart® each side	
E4S90	-M46	-/90/90	NLB	45	44	1 x 10mm and 1 x 13mm EPB BraceSmart®/NoiseSmart® each side	
E4SL90	-F64	90/90/90	LB	47	46	2 x 16mm EPB FireSmart® each side	
E4S120	-F52	-/120/120	NLB	45	44	2 x 13mm EPB FireSmart® each side	
	-F58	-/120/120	NLB	46	45	1 x 16mm EPB FireSmart® and 1 x 13mm FireSmart® each side	

Please refer to the EPB Plasterboard Fire Rated Systems Manual for these System Specification sheets

Fire Rated Walls

System Number	Lining Suffix	FRR	Load Bearing Ability	Noise Control		Lining Requirements	Page
				STC	Rw		
Double Steel Frame Wall with FireSmart Central Liner - Two Way FRR							
E2CSD60	-F26	-/60/60	NLB	44	43	1 x 13mm EPB FireSmart® each side	

Fire Rated Universal Walls

System Number	Lining Suffix	FRR	Load Bearing Ability	Noise Control		Lining Requirements
				STC	Rw	
Universal Timber or Steel Frame Wall - One Way FRR						
E1UW15	-S13	15/15/15	LB	-	-	1 x 13mm EPB® Standard one side (requires wall insulation)
E1UW30	-F16a	30/30/30	LB	-	-	1 x 16mm EPB FireSmart® one side
E2UW30	-F20	30/30/30	LB	-	-	2 x 10mm EPB FireSmart® one side
E2UW45	-F26	45/45/45	LB	-	-	2 x 13mm EPB FireSmart® one side
E2UW60	-F26a	60/60/60	LB	-	-	2 x 13mm EPB FireSmart® one side
	-F29	60/60/60	LB	-	-	1 x 16mm EPB FireSmart® and 1 x 13mm EPB FireSmart® one side
E3UW90	-F39a	90/90/90	LB	-	-	3 x 13mm EPB FireSmart® one side
	-F42	90/90/90	LB	-	-	1 x 16mm EPB FireSmart® and 2 x 13mm EPB FireSmart® one side
E3UW120	-F45a	120/120/120	LB	-	-	1 x 13mm EPB FireSmart® and 2 x 16mm EPB FireSmart® one side

External Walls

System Number	Lining Suffix	FRR	Load Bearing Ability	Noise Control		Lining Requirements
				STC	Rw	
Single Timber Frame External Walls- Two Way FRR						
EBV1TL30	-F10	30/30/30	LB	46	45	1 x 10mm EPB FireSmart® one side Brick Veneer other side
	-S13	30/30/30	LB	46	45	1 x 13mm EPB® Standard one side Brick Veneer other side
EBV1TL60	-F13	60/60/60	LB	46	45	1 x 13mm EPB FireSmart® one side Brick Veneer other side
EGW1TL30	-F10	30/30/30	LB	37	36	1 x 10mm EPB FireSmart® on internal side 1 x 10mm GIB Weatherline® to external side
EGW1TL60	-F13	60/60/60	LB	38	37	1 x 13mm EPB FireSmart® on internal side 1 x 13mm GIB Weatherline® to external side

Fire Rated Walls with simultaneous fire exposure on both sides

System Number	Lining Suffix	FRR	Load Bearing Ability	Noise Control		Lining Requirements
				STC	Rw	
Single Timber Frame Wall with Simultaneous Fire Exposure on Both sides - Two Way FRR						
E2TL30S	-F26	30/-/-	LB	38	37	1 x 13mm EPB FireSmart® each side
E4TL60S	-F52	60/-/-	LB	46	45	2 x 13mm EPB FireSmart® each side

Please refer to the EPB Plasterboard Fire Rated Systems Manual for these System Specification sheets

Smoke Separation Walls

System Number	Lining Suffix	FRR	Load Bearing Ability	Noise Control		Lining Requirements	Page
				STC	Rw		
Smoke Separation - Timber or Steel Frame Wall - Two Way FRR							
E2sm10	-	10/10/10	LB	-	-	1 x Minimum 10mm EPB® Plasterboard each side	

Fire Rated Floor/Ceilings

System Number	Lining Suffix	FRR	Load Bearing Ability	Noise Control			Lining Requirements
				STC	Rw	IIC	
Floor/Ceiling							
E1FC15	-S13	15/15/15	LB	38	37	31	1 x 13mm EPB® Standard
E1FC30	-F13	30/30/30	LB	39	38	32	1 x 13mm EPB FireSmart®
E2FC30	-S26	30/30/30	LB	39	38	32	2 x 13mm EPB® Standard
E1FC45	-F13	45/45/45	LB	39	38	32	1 x 13mm EPB FireSmart®
E1FC60	-F16	60/60/60	LB	39	38	32	1 x 16mm EPB FireSmart®
E2FC60	-FS26	60/60/60	LB	40	39	33	1 x 13mm EPB FireSmart® and 1 x 13mm EPB® Standard
	-F26	60/60/60	LB	41	40	34	2 x 13mm EPB FireSmart ®
E2FC90	-F29	90/90/90	LB	41	40	34	1 x 16mm EPB FireSmart® and 1 x 13mm EPB FireSmart®
E3FC120	-F39	120/120/120	LB	43	42	35	3 x 13mm EPB FireSmart®
Composite Joist Floor/Ceiling							
E1CJ30	-F13	30/30/30	LB	39	38	32	1 x 13mm EPB FireSmart®
E2CJ30	-S26	30/30/30	LB	39	38	32	2 x 13mm EPB® Standard
E1CJ45	-F13	45/45/45	LB	39	38	32	1 x 13mm EPB FireSmart®
E1CJ60	-F16	60/60/60	LB	39	38	32	1 x 16mm EPB FireSmart®
E2CJ60	-FS26	60/60/60	LB	40	39	33	1 x 13mm EPB FireSmart® and 1 x 13mm EPB ®Standard
Steel Joist Floor/Ceiling							
E1SJ30	-F13	30/30/30	LB	35	34	31	1 x 13mm EPB FireSmart®
E2SJ60	-F26	60/60/60	LB	39	38	32	2 x 13mm EPB FireSmart®
Battened Floor/Ceiling							
E1BC30	-F13	30/30/30	LB	35	34	31	1 x 13mm EPB FireSmart®
E1BC60	-F16	60/60/60	LB	39	38	32	1 x 16mm EPB FireSmart®
Direct Fix Clip Floor/Ceiling							
E1DF45	-F13	45/45/45	LB	49	48	42	1 x 13mm EPB FireSmart®
E1DF60	-F16	60/60/60	LB	49	48	43	1 x 16mm EPB FireSmart®

Please refer to the EPB Plasterboard Fire Rated Systems Manual for these System Specification sheets

Fire Rated Floor/Ceilings

System Number	Lining Suffix	FRR	Load Bearing Ability	Noise Control			Lining Requirements	Page
				STC	Rw	IIC		
E2DF60	-FS26	60/60/60	LB	49	48	43	1 x 13mm EPB FireSmart® and 1 x 13mm EPB® Standard	
	-F26	60/60/60	LB	52	51	43	2 x 13mm EPB FireSmart®	
E2DF90	-F32	90/90/90	LB	54	53	43	2 x 16mm EPB FireSmart®	
Suspended Grid Floor/Ceiling								
E1SC30	-F13	30/30/30	LB	48	47	42	1 x 13mm EPB FireSmart®	
E2SC30	-S26	30/30/30	LB	50	49	42	2 x 13mm EPB® Standard	
E1SC60	-F16	60/60/60	LB	48	47	43	1 x 16mm EPB FireSmart®	
E1XC60	-F16	60/60/60	LB	48	47	43	1 x 16mm EPB FireSmart®	
E2SC60	-FS26	60/60/60	LB	48	47	42	1 x 13mm EPB FireSmart® and 1 x 13mm EPB® Standard	
	-F26	60/60/60	LB	51	50	42	2 x 13mm EPB FireSmart®	
E2SC90	-F32	90/90/90	LB	53	52	43	2 x 16mm EPB FireSmart®	
E2XC90	-F29	90/90/90	LB	48	47	43	1 x 16mm EPB FireSmart® and 1 x 13mm EPB FireSmart®	

Fire Rated Universal Ceilings

System Number	Lining Suffix	FRR	Load Bearing Ability	Noise Control			Lining Requirements
				STC	Rw	IIC	
Universal Ceiling - Timber or Steel Frame							
E1UC15	-F13	15/15/15	LB	-	-	-	1 x 13mm EPB FireSmart®
E1UC30	-F16a	30/30/30	LB	-	-	-	1 x 16mm EPB FireSmart®
E2UC60	-F26a	60/60/60	LB	-	-	-	2 x 13mm EPB FireSmart®
	-F29	60/60/60	LB	-	-	-	1 x 16mm EPB FireSmart® and 1 x 13mm EPB FireSmart®
E3UC90	-F39a	90/90/90	LB	-	-	-	3 x 13mm EPB FireSmart®
	-F42	90/90/90	LB	-	-	-	1 x 16mm EPB FireSmart® and 2 x 13mm EPB FireSmart®

Please refer to the EPB Plasterboard Fire Rated Systems Manual for these System Specification sheets

Fire Rated Speciality Systems

System Number	Lining Suffix	FRR	Load Bearing Ability	Noise Control STC 64mm Stud No Fill	64mm Stud Fill	102mm Stud No Fill	102mm Stud Fill	Lining Requirements	Page
Shaft Wall - Fire Rated from Shaft Side only									
E1SWS60	-F13	-/60/60	NLB	39	45	42	46	1 x 13mm EPB FireSmart®	
E2SWS90	-F26	-/90/90	NLB	43	49	46	50	2 x 13mm EPB FireSmart®	
E2SWS120	-F29	-/120/120	NLB	44	50	46	51	1 x 16mm EPB FireSmart® and 1 x 13mm EPB FireSmart®	
Shaft Wall - Fire Rated from Either Side									
E1SWE30	-F13	-/30/30	NLB	39	45	42	46	1 x 13mm EPB FireSmart®	
E2SWE60	-F26	-/60/60	NLB	43	49	46	50	2 x 13mm EPB FireSmart®	
E2SWE90	-F29	-/90/90	NLB	44	50	46	51	1 x 16mm EPB FireSmart® and 1 x 13mm EPB FireSmart®	
E3SWE120	-F42	-/120/120	NLB	46	51	48	52	1 x 16mm EPB FireSmart® and 2 x 13mm EPB FireSmart®	
EPB Shaft Panel									
EPB Shaft Panel									

Fire Rated Columns & Beams

System Number	Lining Suffix	FRR	Load Bearing Ability	Noise Control STC	Noise Control Rw	Lining Requirements
Steel Column & Beam - Timber Strapped						
E1CBT15	-S13	15/-/-	LB	-	-	1 x 13mm EPB® Standard
E1CBT30	-F16	30/-/-	LB	-	-	1 x 16mm EPB FireSmart®
E2CBT30	-F20	30/-/-	LB	-	-	2 x 10mm EPB FireSmart®
E2CBT60	-F26	60/-/-	LB	-	-	2 x 13mm EPB FireSmart®
E2CBT75	-F32	75/-/-	LB	-	-	2 x 16mm EPB FireSmart®
E3CBT90	-F45	90/-/-	LB	-	-	1 x 13mm EPB FireSmart® and 2 x 16mm EPB FireSmart®
Steel Column & Beam - Steel Clip and Channel						
E1CBS15	-S13	15/-/-	LB	-	-	1 x 13mm EPB® Standard
E1CBS30	-F16	30/-/-	LB	-	-	1 x 16mm EPB FireSmart®
E2CBS30	-F20	30/-/-	LB	-	-	2 x 10mm EPB FireSmart®
E2CBS60	-F26	60/-/-	LB	-	-	2 x 13mm EPB FireSmart®
E2CBS75	-F32	75/-/-	LB	-	-	2 x 16mm EPB FireSmart®
E3CBS90	-F45	90/-/-	LB	-	-	1 x 13mm EPB FireSmart ®and 2 x 16mm EPB FireSmart®

Please refer to the EPB Plasterboard Fire Rated Systems Manual for these System Specification sheets

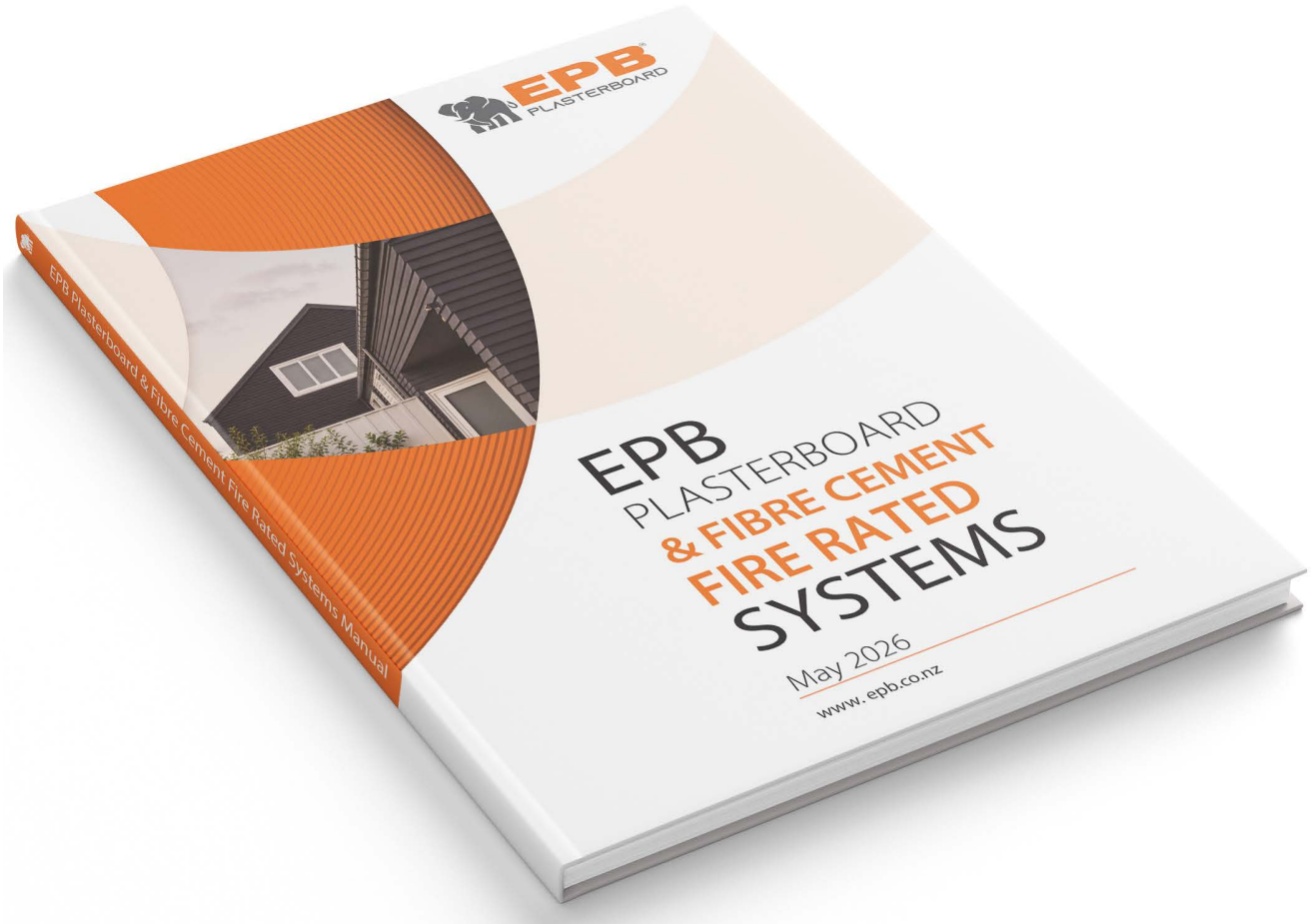

For Plasterboard & Fibre Cement combination Fire Rated system options, go to

EPB Plasterboard & Fibre Cement Fire Rated Systems Manual

External Fire Rated Walls - Timber Frame

System Number	Lining Suffix	FRR	Insulation	Noise Control STC	Lining Requirements	Page
EPB Plasterboard & James Hardie Linea™ Weatherboard						
EJL1TL30	-F10	30/30/30	R2.2 glass wool	44	1 x 10mm EPB FireSmart® on Internal side James Hardie Linea™ Weatherboard to External side	
EJL1TL60	-F13	60/60/60	R2.2 glass wool	45	1 x 13mm EPB FireSmart on Internal side James Hardie Linea™ Weatherboard to External side	
EPB Plasterboard & James Hardie Oblique™ Weatherboard						
EJOh1TL30	-F10	30/30/30	R2.2 glass wool	43	1 x 10mm EPB FireSmart® on Internal side James Hardie Oblique™ Weatherboard horizontal to External side	
EJOv1TL30	-F10	30/30/30	R2.2 glass wool	43	1 x 10mm EPB FireSmart® on Internal side James Hardie Oblique™ Weatherboard vertical to External side	
EJOh1TL60	-F13	60/60/60	R2.2 glass wool	45	1 x 13mm EPB FireSmart® on Internal side James Hardie Oblique™ Weatherboard horizontal to External side	
EJOv1TL60	-F13	60/60/60	R2.2 glass wool	45	1 x 13mm EPB FireSmart on Internal side James Hardie Oblique™ Weatherboard vertical to External side	
EPB Plasterboard & James Hardie™ Plank Weatherboard						
EJW1TL30	-F10	30/30/30	R2.2 glass wool	41	1 x 10mm EPB FireSmart® on Internal side James Hardie™ Plank Weatherboard to External side	
EJW1TL60	-F13	60/60/60	Hardie™ Mineral	44	1 x 13mm EPB FireSmart® on Internal side James Hardie™ Plank Weatherboard to External side	
EPB Plasterboard & James Hardie Stria™ Cladding						
EJSh1TL30	-F10	30/30/30	R2.2 glass wool	42	1 x 10mm EPB FireSmart® on Internal side James Hardie Stria™ Cladding horizontal to External side	
EJSv1TL30	-F10	30/30/30	R2.2 glass wool	42	1 x 10mm EPB FireSmart® on Internal side James Hardie Stria™ Cladding vertical to External side	
EJSh1TL60	-F13	60/60/60	R2.2 glass wool	44	1 x 13mm EPB FireSmart® on Internal side James Hardie Stria™ Cladding horizontal to External side	
EJSv1TL60	-F13	60/60/60	R2.2 glass wool	44	1 x 13mm EPB FireSmart® on Internal side James Hardie Stria™ Cladding vertical to External side	
EPB Plasterboard & James Hardie Hardie™ Flex Sheet						
EJF1TL30	-F10	30/30/30	R2.2 glass wool	40	1 x 10mm EPB FireSmart® on Internal side James Hardie Hardie™ Flex Sheet to External side	
EJF1TL60	-F13	60/60/60	Hardie™ Mineral	43	1 x 13mm EPB FireSmart® on Internal side James Hardie Hardie™ Flex Sheet to External side	
EPB Plasterboard & James Hardie Axon™ Panel						
EJA1TL30	-F10	30/30/30	R2.2 glass wool	41	1 x 10mm EPB FireSmart® on Internal side James Hardie Axon™ Panel to External side	
EJA1TL60	-F13	60/60/60	Hardie™ Mineral	44	1 x 13mm EPB FireSmart® on Internal side James Hardie Axon™ Panel to External side	

Please refer to the EPB Plasterboard & Fibre Cement Fire Rated Systems Manual for these System Specification sheets

External Fire Rated Walls - Timber Frame

System Number	Lining Suffix	FRR	Insulation	Noise Control STC	Lining Requirements	Page
EPB Plasterboard & James Hardie Axon™ Panel & RAB™ Board with CLD Battens						
EJRA1TL30	-F10	30/30/30	R2.2 glass wool	42	1 x 10mm EPB FireSmart® on Internal side James Hardie Axon™ Panel and RAB™ Board with CLD™ Structural Cavity Batten to External side	
EJRA1TL60	-F13	60/60/60	Hardie™ Mineral	44	1 x 13mm EPB FireSmart® on One side James Hardie Axon™ Panel and RAB™ Board with CLD™ Structural Cavity Batten to External side	
EPB Plasterboard & James Hardie ExoTec™ Facade Panel & RAB™ Board						
EJRX1TL30	-F10	30/30/30	R2.2 glass wool	43	1 x 10mm EPB FireSmart® on Internal side James Hardie ExoTec™ Facade Panel and RAB™ Board with Top hat system to External side	
EJRX1TL60	-F13	60/60/60	Hardie™ Mineral	46	1 x 13mm EPB FireSmart® on Internal side James Hardie ExoTec™ Facade Panel and RAB™ Board with Top hat system to External side	
EPB Plasterboard & Brick Veneer Cladding & RAB™ Board						
EJRB1TL30	-F10	30/30/30	R2.2 glass wool	44	1 x 10mm EPB FireSmart® on Internal side Brick Veneer Cladding and RAB™ Board to External side	
EJRB1TL60	-F13	60/60/60	R2.2 glass wool	45	1 x 13mm EPB FireSmart® on Internal side Brick Veneer Cladding and RAB™ Board to External side	
EPB Plasterboard & James Hardie RAB™ Board & a Weathertight Cladding (See Note 1)						
EJRN1TL30	-F10	30/30/30	R2.2 glass wool	43	1 x 10mm EPB FireSmart® on Internal side James Hardie RAB™ Board with a Weathertight Cladding to External side	
EJRN1TL60	-F13	60/60/60	Hardie™ Mineral	44	1 x 13mm EPB FireSmart® on Internal side James Hardie RAB™ Board with a Weathertight Cladding to External side	
EJRN2TL60	-F20	60/60/60	Hardie™ Mineral	46	2 x 10mm EPB FireSmart® on Internal side James Hardie RAB™ Board with a Weathertight Cladding to External side	
	-S26	60/60/60	Hardie™ Mineral	47	2 x 13mm EPB® Standard on Internal side James Hardie RAB™ Board with a Weathertight Cladding to External side	
	-M20	60/60/60	Hardie™ Mineral	47	2 x 10mm EPB BraceSmart®/NoiseSmart® on Internal side James Hardie RAB™ Board with a Weathertight Cladding to External side	

Note1 : It is important to consider that the fire properties of the external cladding is in accordance with NZBC C/VM1 or C/AS documents. Refer to Table 5.1 of Section 5.4 of C/AS1 and Table 5.5 of Section 5.8.1 of C/AS2 for the information about various risk groups to identify the external fire spread safety requirement applicable to the exterior surface finishes.

External Fire Rated Walls - Steel Frame

System Number	Lining Suffix	FRR	Insulation	Noise Control STC	Lining Requirements
EPB Plasterboard & James Hardie RAB™ Board & a Weathertight Cladding (See Note 1)					
EJRN1SL30	-F16	30/30/30	Hardie™ Mineral	43	1 x 16mm EPB FireSmart® on Internal side James Hardie RAB™ Board with a Weathertight Cladding to External side
EJRN2SL30	-F20	30/30/30	Hardie™ Mineral	47	2 x 10mm EPB FireSmart® on Internal side James Hardie RAB™ Board with a Weathertight Cladding to External side
EJRN2SL60	-F26	60/60/60	Hardie™ Mineral	49	2 x 13mm EPB FireSmart® on Internal side James Hardie RAB™ Board with a Weathertight Cladding to External side

Please refer to the EPB Plasterboard & Fibre Cement Fire Rated Systems Manual for these System Specification sheets

Internal Fire Rated Walls - Timber Frame

System Number	Lining Suffix	FRR	Insulation	Noise Control STC	Lining Requirements
EPB Plasterboard & James Hardie Villaboard™ Lining					
EJV1TL30	-F10	30/30/30	R2.2 glass wool	41	1 x 10mm EPB FireSmart® one side James Hardie Villaboard™ Lining other side
EJV1TL60	-F13	60/60/60	Hardie™ Mineral	42	1 x 13mm EPB FireSmart® one side James Hardie Villaboard™ Lining other side

Full IT - Internal Fire Rated Walls - Double Timber Frame

System Number	Lining Suffix	FRR	Insulation	Noise Control STC	Lining Requirements
EPB Plasterboard & James Hardie Villaboard™ Lining					
EJV2TDLA30	-F10	30/30/30	R2.2 glass wool	59	1 x 10mm EPB FireSmart® and 1 x 9mm James Hardie Villaboard™ Lining on each side
EJV2TDLA60	-F13	60/60/60	R2.2 glass wool	62	1 x 13mm EPB FireSmart® and 1 x 9mm James Hardie Villaboard™ Lining on each side

Floor/Ceilings - Timber Frame

System Number	Lining Suffix	FRR	Insulation	Noise Control STC	Noise Control IIC	Lining Requirements to underside of Frame
EPB Plasterboard & James Hardie Secura™ Interior Flooring						
EJS1FC30	-F13	30/30/30	R1.8 glass wool	45	33	1 x 13mm EPB FireSmart® to underside of frame
EJS1FC60	-F16	60/60/60	n/a	46	33	1 x 16mm EPB FireSmart® to underside of frame

Full Intertenancy - Floating Floor/Ceilings - Timber Frame

System Number	Lining Suffix	FRR	Insulation	Noise Control STC	Noise Control IIC	Lining Requirements to underside of Frame
EPB Plasterboard & Floating James Hardie Secura™ Interior Flooring						
EFJ2DFA60	-FS26	60/60/60	R1.8 glass wool	67	57-76	1 x 13mm EPB FireSmart® And 1 x 13mm EPB® Standard under the battens
	-F26	60/60/60	R1.8 glass wool	68	57-77	2 x 13mm EPB FireSmart® under the battens

Full Intertenancy - Floating Floor/Ceilings - Steel Frame

System Number	Lining Suffix	FRR	Insulation	Noise Control STC	Noise Control IIC	Lining Requirements to underside of Frame
EPB Plasterboard & Floating James Hardie Secura™ Interior Flooring						
EFJ2DFsA45	-F26	45/45/45	R1.8 glass wool	66	56-76	2 x 13mm EPB FireSmart® under the battens
	-M26	45/45/45	R1.8 glass wool	67	56-76	2 x 13mm EPB BraceSmart®/NoiseSmart® under the battens
EFJ2DFsA60	-F29	60/60/60	R1.8 glass woo	67	56-76	1 x 16mm EPB FireSmart® And 1 x 13mm EPB FireSmart® under the battens

Please refer to the EPB Plasterboard & Fibre Cement Fire Rated Systems Manual for these System Specification sheets

INTRODUCTION

The building code objective and functional requirements are concerned with prevention of undue noise transmission from the occupancies or common spaces to the habitable spaces of household units. This manual provides details for construction of Two way Fire Rated walls and floor/ ceiling elements to provide sound isolation for airborne and impact noise to meet the NZBC Clause G6 performance requirements.

Elephant Plasterboard (NZ) Limited has many different combinations of wall and ceiling Noise Control Systems. It is the responsibility of the specifier to accommodate the required performance of the building they are considering. The specifier should take into consideration both external and internal noise control & fire rating for occupants intended use. Special consideration must be taken in the construction process.

All construction details that have been provided in this manual are generic only and it is important that expert advice is seeked to determine suitability in each individual project

Limitations and Conditions of Use

- EPB® Plasterboard is intended for normal conditions of dry internal use.
- EPB® Plasterboard must not be used for bracing applications in or around baths and shower areas.
- EPB® Plasterboard must not be exposed to liquid water or be installed in situations where extended exposures to humidity above 90% Relative Humidity are to be expected. Bathrooms, kitchens and laundries should have adequate ventilation or heating to avoid condensation build-up.
- A suitable surface finish (e.g. Vinyl wallpaper or gloss and semi-gloss alkyd paints) must be applied to EPB® Plasterboard in all areas where liquid water or high humidity can be expected.
- EPB® Plasterboard must not be installed over a vapour barrier.
- EPB® Plasterboard must not be applied directly to masonry, concrete or solid plaster, unless timber strapping or steel furring channels are used.
- EPB® Plasterboard must not be exposed to temperatures of 52ºC or greater for prolonged periods.
- EPB® Plasterboard may not be used as an external lining.

New Zealand Building Code (NZBC) Compliance

EPB® Plasterboard is manufactured to AS/NZS 2588 and has been specifically formulated to meet New Zealand Building Code requirements. EPB® Plasterboard has been marketed internationally since 1975 and the product has established an excellent history of performance for its use in buildings throughout New Zealand and the Asia/Pacific region. EPB® Plasterboard meets the durability requirements of the NZBC and is subject to use, installation and maintenance in accordance with the instructions outlaid in this manual. The Manufacturing plant is International Standard ISO 9001 and ISO 14001 registered.

- **NZBC Clause B1 Structure:**

  Framing material specifications used with EPB® Plasterboard Systems must be in accordance with the performance requirements of NZBC Clause B1. Timber framed walls and floors must be installed and meet the requirements of NZS 3604.

- **NZBC Clause B2 Durability:**

  EPB® Plasterboard Fire, Noise Control & Bracing Systems have a serviceable life of not less than 50 years and so is in accordance to NZBC B2.3.1.

- **NZBC Clause C1-C6 Protection from Fire:**

  EPB® Plasterboard Fire & Noise Control Systems can meet the requirements of providing passive fire protection as per NZBC Clause C1-C6.

- **NZBC Clause E3 Internal Moisture:**

  EPB® Plasterboard Wet Area Systems can meet the requirements of NZBC Acceptable Solution E3/AS1.

- **NZBC Clause F2 Hazardous Building Materials:**

  EPB® Plasterboard Systems meet this requirement of NZBC Clause F2 and will not present a health hazard to people.

- **NZBC Clause G6 -Airborne & Impact Sound:**

  EPB® Plasterboard Noise Control Systems entitled **'Full Intertenancy'** (STC 55 or greater) systems meet the requirements of NZBC Clause G6.

INTRODUCTION

Fire Resistance Ratings (FRR)

To prevent fire spread or structural collapse, the Acceptable Solutions require building elements to have fire resistance ratings (FRR). The level of FRR required depends on the risk group of the building. The way to determine the FRR of building elements is by using the standard tests specified in Appendix C of the Acceptable Solutions.

FRR components

An FRR comprises three numbers: these give time values in minutes for structural adequacy, integrity and insulation. Primary and secondary elements required to have an FRR will, depending on their function, need to satisfy one or more of these three criteria as follows:

a) **Structural Adequacy**: usually provided by primary elements within a fire cell. These include building elements which are part of the structure, and those providing support to other elements with an FRR within the same or adjacent fire cells. Examples are: columns, beams, floors and walls (which may also be fire separations). Paragraph 4.3 of the Acceptable Solutions describes special situations where primary elements need not have an FRR.

b) **Integrity**: usually provided by secondary elements. Examples are fire separations, which are internal partitions and floors, areas of external walls not permitted to be an unprotected area, and some areas of roofs when close to another building or crossed by an exit way. Primary elements forming an integral part of a fire separation are also rated for integrity.

c) **Insulation**: applies to fire separations and is required where the transmission of heat through the element may endanger occupants on the other side or cause fire to spread to other fire cells or adjacent buildings. For example, insulation is necessary for fire separations between sleeping spaces, where protecting a safe path or through external walls.

EPB® Plasterboard Fire Rated Systems meet the requirements of the above clauses and definitions and have numerous systems combinations as outlined in this manual. All EPB® Plasterboard Fire Rated systems have been tested or internally assessed or have opinions provided by independent accredited quality assurance organisations like "The Building Research Association of New Zealand (BRANZ)".

Internal Lining Surface Finish Properties

EPB® Plasterboard has been tested at BRANZ in accordance with ISO 5660 Reaction to fire tests (Heat release, smoke production and mass loss rate) Part 1: Heat release rate (cone calorimeter method); and ISO 5660 Reaction to fire tests (Heat release, smoke production and mass loss rate) Part 2: Smoke production rate (dynamic measurement).

A Group Number Classification of 1-S was achieved in Fire test FH 5695-TT for all EPB Plasterboard paper faced sheet linings. This classification only applies to EPB® Plasterboard paper faced sheet linings without paint or wallpaper finish. Contact the surface finish suppliers for group number information for their products.

'Group Number 1-S' is the highest performance expectation under 'Part 4. Control of Internal Fire and Smoke Spread' clause C/AS2 to C/AS7 of the NZBC. It means an EPB® Plasterboard paper faced sheet lining can be specified for use in any risk group application.

New Zealand Building Code Clause G6 Airborne and Impact Sound

Building Code Clause G6 is about prevention of undue noise transmission and requires that 'buildings shall be provided with adequate noise control in common walls, floors and other elements between occupancies, habitable spaces and other occupancies or common spaces'.

The performance criteria shall be:

- Sound Transmission Class(STC) for Walls, floors and ceilings - no less than 55, and
- Impact Insulation Class (IIC) of floors to be no less than 55.

EPB® Noise Control Systems have been designed to comply with the NZBC Clause G6 and these type of systems are classified as the '**Full Intertenancy**' (STC 55 or greater). Systems classified as '**Sub Intertenancy**' are below 55 STC and do not meet this requirement.

Sound Transmission Class (STC)

A single number rating derived from measured values of transmission loss in accordance with classification ASTM E 413, Determination of Sound Transmission Class. It provides an estimate of the performance of a partition in certain common sound insulation situations.

Impact Insulation Class (IIC)

A single number rating derived from measured values of normalized impact sound pressure levels in accordance with Method of ASTM E 492, Annex A1, Laboratory Measurement of Impact Sound Transmission Through Floor Ceiling Assemblies Using the Tapping Machine. It provides an estimate of the impact sound insulating performance of a floor-ceiling assembly.

INTRODUCTION

Sound Transmission Class (STC)

The STC number is derived from sound attenuation values tested at sixteen standard frequencies from 125 Hz to 4000 Hz. These Transmission Loss values are then plotted on a sound pressure level graph and the resulting curve is compared to a standard reference contour. The Test method fit these values to the appropriate Transmission Loss Curve to determine an STC rating. A larger figure means more airborne sound insulation. The STC rating is appropriate for speech sounds, but much less so for amplified music, mechanical equipment noise, transportation noise, or any sound with substantial low-frequency energy below 125 Hz. Sometimes, acoustical labs will measure Transmission Loss at frequencies below 125 Hz, possibly down to 50 Hz or lower, thus giving additional valuable data to evaluate transmission loss at very low frequencies, such as a sub woofer-rich home theatre systems.

Sound Control Wall Elements
STC 60

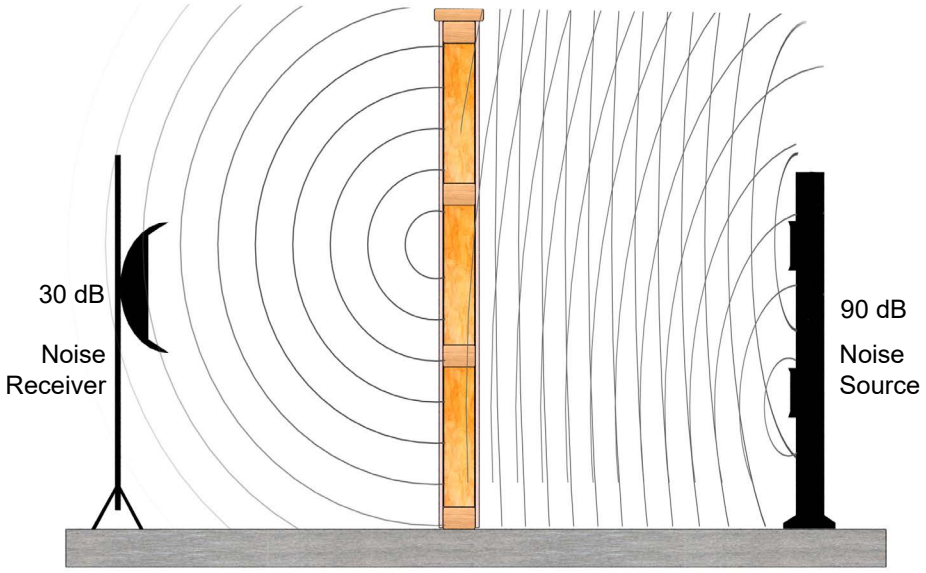

Impact Insulation Class (IIC)

Impact insulation class (or IIC) is a rating of how well a floor element attenuates impact sounds, such as footsteps. A larger number means more impact sound insulation. The scale, like the decibel scale for sound, is logarithmic. The IIC is derived from ASTM method E989, which in turn uses a tapping machine specified in ASTM method E492.

The IIC number is derived from sound attenuation values tested at sixteen standard frequencies from 100 to 3150 Hz. "Real world" footstep noise is also generated at frequencies below 100 Hz, so the IIC value may not accurately describe the complete noise attenuation profile of a floor.

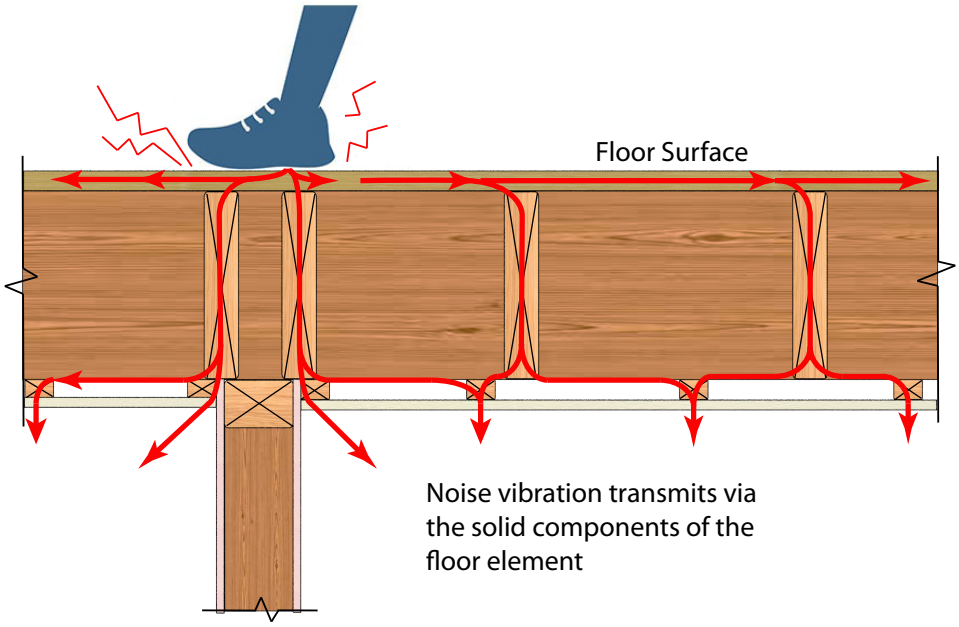

INTRODUCTION

Flanking Transmission Paths

Flanking transmission is a term used by acoustical engineers wherein the sound passes around the wall or floor elements. Flanking sound transmission can be especially bothersome in multi-unit residential buildings. The best time to guard against flanking transmission is in the design and construction phase of the dwelling. Simply specifying a high performance wall between adjacent dwelling spaces, is no guarantee to sound isolation and privacy upon occupancy. Sound will find the weakest links. Fire Rated Acoustic Sealants should be used to fill all the voids in walls, ceilings and floor assembles.

Typical Flanking Sound Transmission Pathways can include:

- Ceilings
- Floors
- Windows
- Fixtures & Outlets – e.g. Light switches, Telephone outlets, and Recessed lighting fixtures
- Shared Structural Building Components – e.g. Floor joists, Drywall partitions, Continuous concrete floors, and concrete block walls
- Structural Joints – e.g. Perimeter joints at wall & floor junctures
- Plumbing Chases

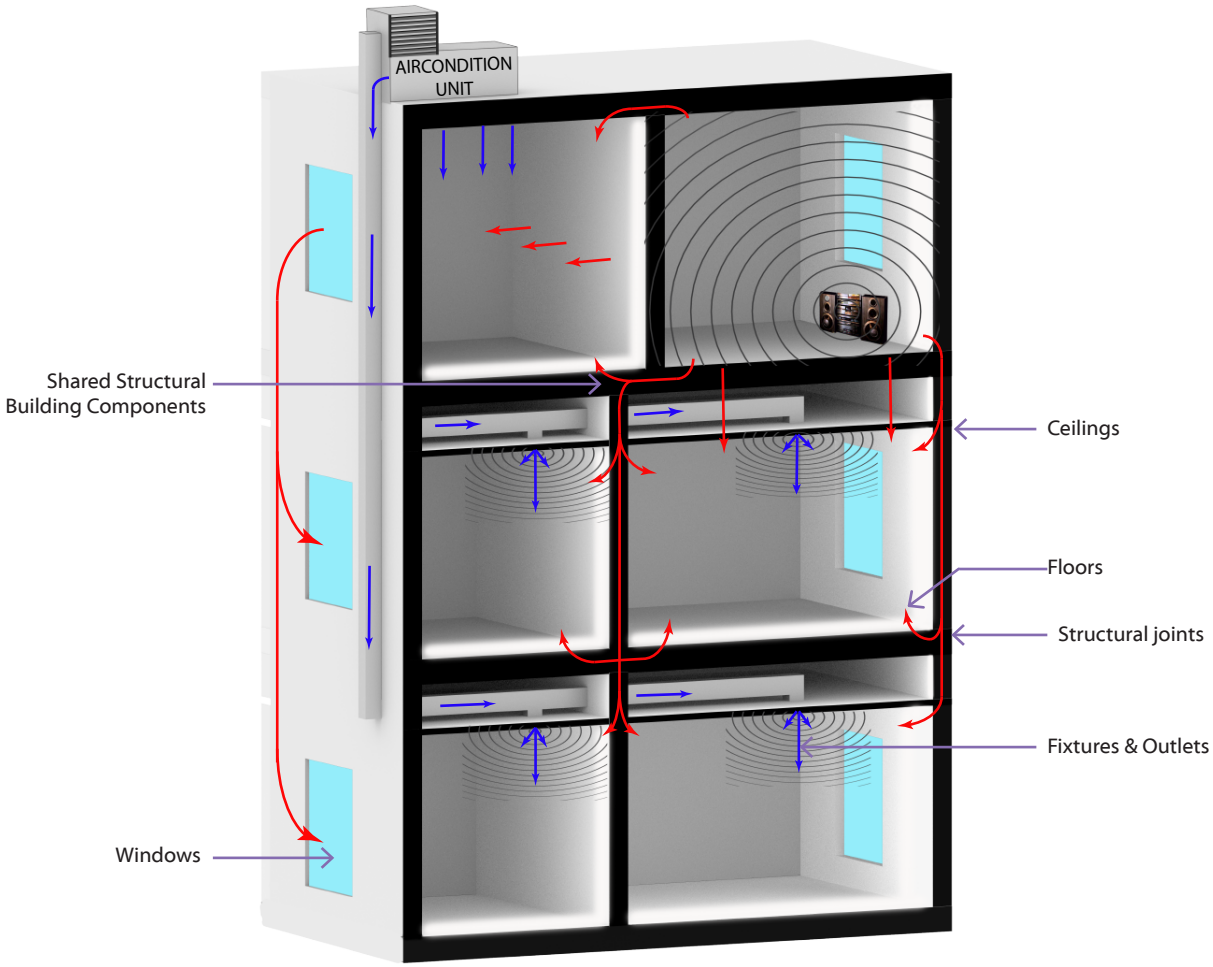

Noise Control Walls

EPB® Plasterboard Noise Control Systems have been tested on timber & steel frame walls, either as Load Bearing (LB) or Non Load Bearing.

Timber Frame

Stud heights, stud spacings, load and framing dimensions for Load Bearing (LB) or Non Load Bearing (NLB) Timber framed walls are determined by the NZBC, and NZS 3604. Heights greater than what is defined in NZS 3604 will need specific design by a structural engineer.

Steel Frame

Stud heights, stud spacings, load and framing dimensions for Load Bearing (LB) or Non Load Bearing (NLB) Steel framed walls need consultation with the framing supplier or fire engineer for fire design serviceability criteria.

General

Maximum spacing of studs 600mm centres. Wall linings must be mechanically fixed. Glue may not be substituted for mechanical fixing if used in a passive fire system. Screw lengths, spacings and type as defined by this manual must be used. Sheet edges must be fixed over studs when placed vertically or over solid blocking when placed horizontally. All outer layers must be stopped to a minimum level 3 stopping (refer to EPB® Plasterboard Installation Guide). Ensure the outer wall sheet is staggered minimum 300mm centres from the first sheet and that it is placed behind an adjacent stud. If a fire rated sealant is used ensure that the sealant is of the same FRR as the specified system in use and that it has been independently tested.

EPB® QuickBrace System

The bracing systems specified in the EPB® QuickBrace Systems Manual can easily be combined with the EPB® Noise Control Systems by adhering to the details outlined for the relevant Bracing system type and relevant Noise Control System requirements.

For Single layered Noise Control systems, use the QuickBrace fastening pattern and the required screw length of the Noise Control Systems. For Double layered Noise Control systems, the bracing sheet can be either:

- The Inner sheet fixed directly to the framing. Use the QuickBrace fastening pattern and the required screw length of the Noise Control System. The inner layer can be left unstopped; or
- The Outer sheet. Use the QuickBrace fastening pattern and the required screw length of the Noise Control System.

For Resilient Rail or Resilient Mount systems, only single sided bracing systems can be used e.g. ER1, ES-N, ES-H and EM-H. The bracing sheet must be placed directly against the framing and not on the rail or mount side. Use the QuickBrace fastening pattern and the required screw length of the Noise Control System.

Noise Control Floor/Ceiling

EPB® Plasterboard Noise Control Systems have been tested on Load bearing floor/ceiling systems. Refer to this manual for fixings and layer combinations. Ceiling linings must be mechanically fixed. Glue may not be substituted for mechanical fixing if used in a passive fire system. Screw lengths, spacings and type as defined by this manual must be used.

Timber & Composite Joists

Floor/ceiling system as defined in NZS 3604 for floor loadings (2.0 kPa or 3.0 kPa) may be used. Consult NZS 3604 latest edition for floor joist spans. Floor joists must have a minimum of 190mm depth x 45mm width and a maximum spacing of 600mm centres. Alternatively, proprietary composite joist systems may be used. Consult the appropriate supplier's technical information for design strength and serviceability.

Steel Joists

Steel floor joists shall be a minimum depth of 190mm C-section with 45mm flanges and a steel gauge of 1.6mm minimum. Joists to be spaced at no more than 600mm centres.

Flooring

Floor/Ceiling system must have a floor that is at least 20mm thick particle board complying with AS/NZS 1860 Part 1: 2017 or minimum 17mm thick structural ply complying with AS/NZS 2269 Part 0: 2012 fixed to the floor joists as per manufacturer's installation instructions.

Floating Floor

The floating floor systems must be either 19mm James Hardie Tongue & Groove Secura Floor or 20mm Tongue & Groove Particle Board complying to AS/NZS 1860.

Cavity Sound Absorber

Any brand of glass wool insulation which has a minimum density of 9.6kg/m^3 may be used or any brand polyester insulation with a minimum density of 14.7kg/m^3. Do not overfill the cavity as this may compromise and reduce the noise control performance of the system.

Acoustic Sealant

In order to achieve the published STC performances in this manual, a bead of acoustic sealant must be placed around the perimeter of the framing or the inner layer and the outer layer is bedded into the bead.

Load Bearing Steel Studs

The steel frame design shall meet the structural criteria for strength and serviceability under dead and live loads. Frame heights, stud spacings and stud type are determined by specific engineering design. Stud spacings shall be 600 centres maximum. Stud width shall be 35mm minimum.

Refer to the relevant sections of the EPB® Fire Rated Systems Manual, in order to obtain the lining requirements to achieve the equivalent FRR of load bearing steel stud walls.

The Noise Control performance of Load bearing steel stud systems would be equivalent to the Non Load bearing steel stud systems of the same type, as detailed in this manual.

Non Load Bearing Steel Studs

Specific design for serviceability and fire design criteria is required for greater wall heights than the limit stated in the relevant EPB® Noise Control System specification. Consult the framing manufacturer for the serviceability design criteria. Noggings in accordance with the framing supplier.

Product & Component Substitution

When a product specified in a system as per this manual is substituted, the performance of the system will be compromised. Therefore the materials specified in the system must not be substituted. Elephant Plasterboard (NZ) Limited does not take any liability if substitution of components are implemented in any EPB® Plasterboard Systems without consultation.

Plasterboard Substitution Options

The table below indicates which products can substitute the original plasterboard type specified.

✓ indicates that the FRR performance will be maintained

X indicates that the FRR performance will be lower and so therefore the substitution is not allowed

Original EPB® Plasterboard specified	EPB® Plasterboard Substitution Options - FRR performance								
	EPB®Standard		EPB FireSmart®			EPB BraceSmart®/ NoiseSmart®		EPB AquaSmart®	
	10mm	13mm	10mm	13mm	16mm	10mm	13mm	10mm	13mm
10mm EPB® Standard	-	✓	✓	✓	✓	✓	✓	✓	✓
13mm EPB® Standard	X	-	X	✓	✓	✓	✓	✓[1]	✓
10mm EPB FireSmart®	X	✓	-	✓	✓	✓	✓	✓	✓
13mm EPB FireSmart®	X	X	X	-	✓	X	✓	X	✓
16mm EPB FireSmart®	X	X	X	X	-	X	X	X	X
10mm EPB BraceSmart®/NoiseSmart®	X	X	X	✓	✓	-	✓	✓[1]	✓
13mm EPB BraceSmart®/NoiseSmart®	X	X	X	X	✓	X	-	X	✓[1]

Note 1 : See table below for STC reduction when substituting

The table below details the reduction in STC performance when substituting original specified plasterboard with AquaSmart

✓ indicates that the FRR & STC performance will be maintained

X indicates that the FRR performance will be lower and so therefore the substitution is not allowed

Original EPB® Plasterboard specified	STC performance			
	10mm EPB AquaSmart®		13mm EPB AquaSmart®	
	Single layer One side	Single Layer Both sides	Single layer One side	Single Layer Both sides
10mm EPB® Standard	✓	✓	✓	✓
13mm EPB® Standard	Reduced by 1 STC	Reduced by 2 STC	✓	✓
10mm EPB FireSmart®	✓	✓	✓	✓
13mm EPB FireSmart®	X	X	✓	✓
16mm EPB FireSmart®	X	X	X	X
10mm EPB BraceSmart®/NoiseSmart®	Reduced by 1 STC	Reduced by 2 STC	✓	✓
13mm EPB BraceSmart®/NoiseSmart®	X	X	Reduced by 1 STC	Reduced by 2 STC

Nomenclature:

Specification Reference Walls

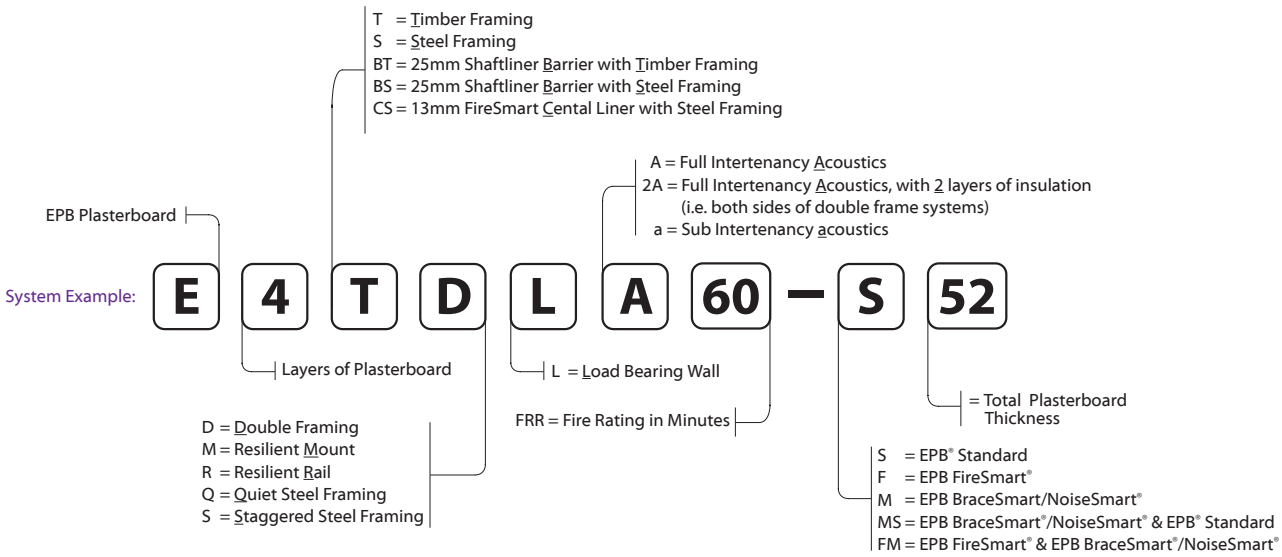

Specification Reference Ceilings

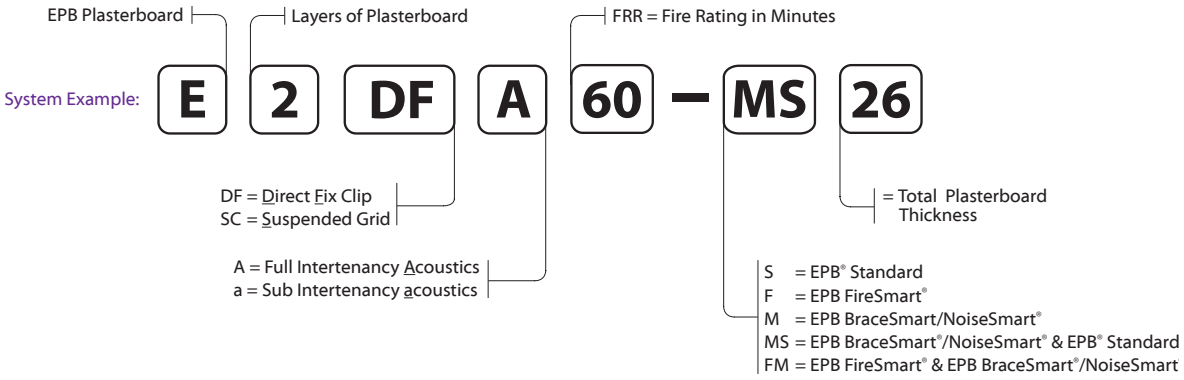

Specification Reference Ceilings - Floating Floor Systems

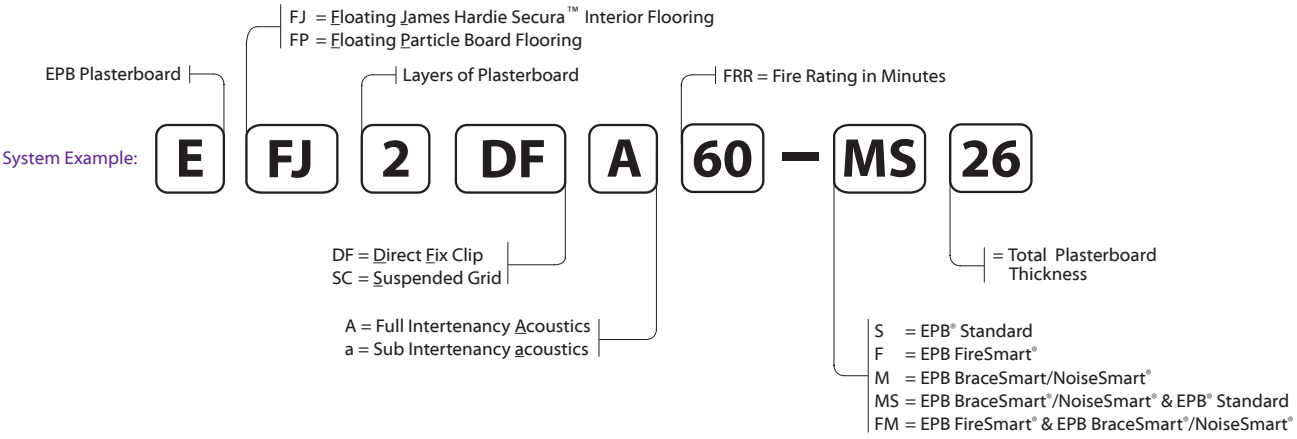

E3TDLA30 — Double Timber Frame — Load Bearing — Two Way FRR

3 Layers: 1 Layer of Plasterboard to one side of frame & 2 Layers of Plasterboard to other side of frame

Full Intertenancy Acoustic

System Number	Lining Suffix	FRR	Load Bearing Ability	Noise Control		Lining Requirement
				STC	Rw	
E3TDLA30	-F30	30/30/30	LB	55	54	1 x 10mm EPB FireSmart® one side 2 x 10mm EPB FireSmart® other side
	-S39	30/30/30	LB	57	56	1 x 13mm EPB® Standard one side 2 x 13mm EPB® Standard other side
	-M30	30/30/30	LB	58	57	1 x 10mm EPB BraceSmart®/NoiseSmart® one side 2 x 10mm EPB BraceSmart®/NoiseSmart® other side

Framing

Framing to comply with relevant sections and clauses of NZBC B1: Structure and NZBC B2: Durability.

Studs at 600mm centres maximum.

Nogs at 1350mm centre maximum.

Wall Height, Load and Framing Dimension

These are determined by NZS3604 stud tables for load bearing or non-load bearing partitions. Minimum frame dimension is 90 x 45mm. Refer to Minimum Partition width below.

Minimum Partition Width

In order to achieve the STC ratings in the table above the partition width (excluding the board) shall be a minimum of 205mm. Increasing the partition width would increase STC performance as per the table below.

Stud Depth	Space Between Frames	Partition Width (Excludes Board)	STC Rating
90mm x 2	25mm Min	205mm	+0
90mm x 2	75mm Min	255mm	+2

Wall Sound Absorber

Install Sound Absorber between studs and nogs on one side of the double frame. Use 90mm thick R2.2 glass wool insulation.

Plasterboard Lining

NB: The installer must look for the Product Identification Code on the face paper to ensure the correct board type is installed. Refer to the Face Paper Product Identification Code table on this page.

One layer of EPB® Plasterboard lining on one side of frame and Two layers on the other side of framing as per specified system above. First layer or inner layer on each side of framing to be fixed vertically. Vertical or Horizontal fixing permitted on outer layer only. Use full height sheets where possible when fixing vertical. Inner layer joints on opposite side of frame should be offset. All sheet joints must be fixed over solid timber framing. Sheet end butt joints must be formed over nogs and offset the outer layer joints from the inner layer.

Sheets shall be touch fitted.

Fixing of Linings

Fasteners (As per Specified System Above)

System Number	Side One		Side Two
	1st Layer	2nd Layer	Single Layer
	High Thread Drywall Screws		
E3TDLA30-F30 E3TDLA30-M30	10mm	10mm	10mm
	41 x 6g	51 x 7g	41 x 6g
E3TDLA30-S39	13mm	13mm	13mm
	41 x 6g	51 x 7g	41 x 6g

Fastener Centres

Inner Layer: Fix at 600 centres on vertical studs and 600mm centres horizontally on top and bottom plates.

Single or Outer Layer: Fix at 300mm centres at sheet perimeter and 300mm centres up each stud.

Place fasteners 50mm from sheet corners along the top and bottom plates. On end studs place additional fasteners 50-60mm vertically and no close than 10mm from plate to stud connections.

Place fasteners minimum 12mm from sheet edges and sheet ends.

Place fasteners at 200mm centres where sheet end butt joints occur.

Avoid outer layer screws from hitting inner layer screws.

Acoustic Sealant

A bead of acoustic sealant is required around the perimeter of the framing or the inner layer. Then the single or outer layer is bedded onto the bead. The perimeter junctions of the wall must be airtight.

Jointing

Inner Layer: Unstopped.

Outer or Single Layer: All fastener heads stopped and all sheet joints reinforced with paper jointing tape and stopped. Wall to ceiling junctions are to be reinforced with paper tape and square stopped or finished with Cornice. All in accordance with EPB® Plasterboard Installation Guide.

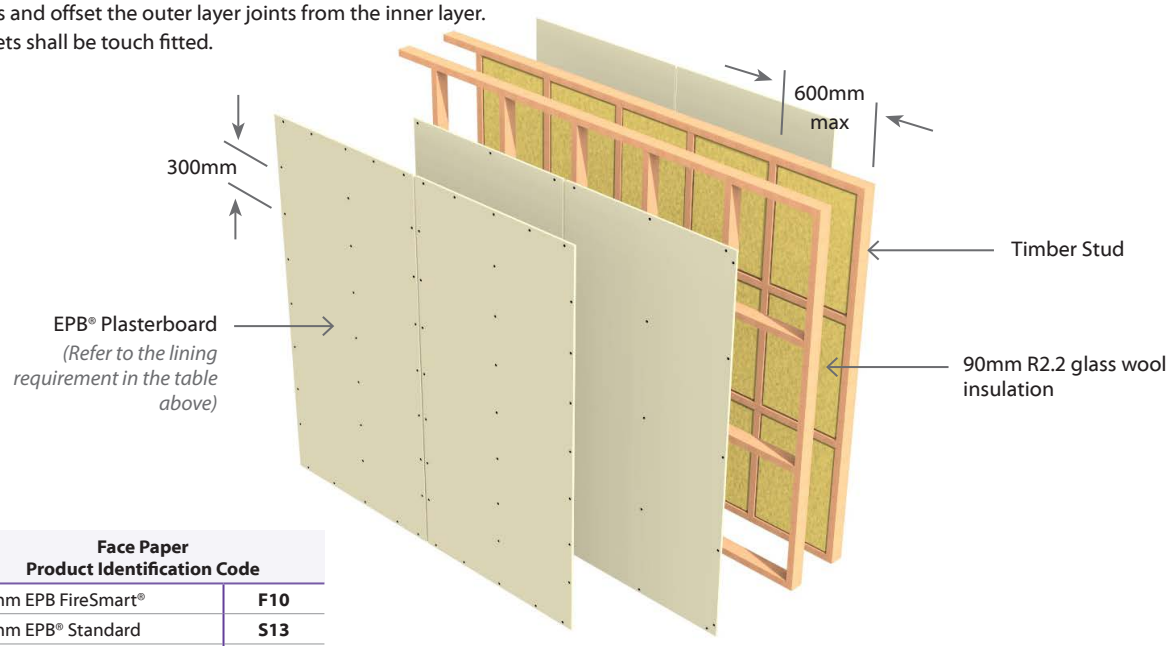

Face Paper Product Identification Code	
10mm EPB FireSmart®	F10
13mm EPB® Standard	S13
10mm EPB Brace/NoiseSmart®	M10

E4TDLA45 Double Timber Frame | Load Bearing | Two Way FRR

4 Layers: 2 Layers of Plasterboard to each side of frame | Full Intertenancy **A**coustic

System Number	Lining Suffix	FRR	Load Bearing Ability	Noise Control		Lining Requirement
				STC	Rw	
E4TDLA45	**-S40**	45/45/45	LB	58	57	2 x 10mm EPB® Standard each side

Framing

Framing to comply with relevant sections and clauses of NZBC B1: Structure and NZBC B2: Durability.

Studs at 600mm centres maximum.

Nogs at 1350mm centre maximum.

Wall Height, Load and Framing Dimension

These are determined by NZS3604 stud tables for load bearing or non-load bearing partitions. Refer to Minimum Partition width.

Minimum Partition Width

In order to achieve the STC ratings in the table above the partition width (excluding the board) shall be a minimum of 205mm. Increasing the partition width would increase STC performance as per the table below.

Stud Depth	Space Between Frames	Partition Width (Excludes Board)	STC Rating
90mm x 2	25mm Min	205mm	+0
70mm x 2	65mm Min	205mm	+0
90mm x 2	75mm Min	255mm	+2
70mm x 2	115mm Min	255mm	+2

Wall Sound Absorber

Install Sound Absorber between studs and nogs on one side of the double frame. Use 90mm thick R2.2 glass wool insulation.

Plasterboard Lining

NB: The installer must look for the Product Identification Code on the face paper to ensure the correct board type is installed. Refer to the Face Paper Product Identification Code table on this page.

Two layers of 10mm EPB® Standard lining fixed on each side of timber framing.

First layer or inner layer on each side of framing to be fixed vertically. Vertical or Horizontal fixing permitted on outer layer only. Use full height sheets where possible. Inner layer joints on opposite side of frame should be offset.

All sheet joints must be fixed over solid timber framing. Vertical Joints of the outer layer should be offset 600mm from those of the inner layer. Sheet end butt joints must be formed over nogs and offset the outer layer joints from the inner layer. Sheets shall be touch fitted.

Fixing of Linings

Fasteners

System Number	Side One		Side Two	
	1st Layer	2nd Layer	1st Layer	2nd Layer
	High Thread Drywall Screws			
E4TDLA45-S40	10mm	10mm	10mm	10mm
	32 x 6g	41 x 6g	32 x 6g	41 x 6g

Fastener Centres

Inner Layer: Fix at 600mm centres at sheet perimeter and all studs.

Outer Layer: Fix at 300mm centres at sheet perimeter and all studs.

Place fasteners 50mm from sheet corners along the top and bottom plates. On end studs place additional fasteners 50-60mm vertically and no close than 10mm from plate to stud connections.

Place fasteners minimum 12mm from sheet edges and sheet ends.

Place fasteners at 200mm centres where sheet end butt joints occur.

Avoid outer layer screws from hitting inner layer screws.

Acoustic Sealant

A bead of acoustical sealant is required around the perimeter of the inner layer and the outer layer is bedded onto the bead. The perimeter junctions of the wall must be airtight.

Jointing

Inner Layer: Unstopped.

Outer Layer: All fastener heads stopped and all sheet joints reinforced with paper jointing tape and stopped. Wall to ceiling junctions are to be reinforced with paper tape and square stopped or finished with Cornice. All in accordance with EPB® Plasterboard Installation Guide.

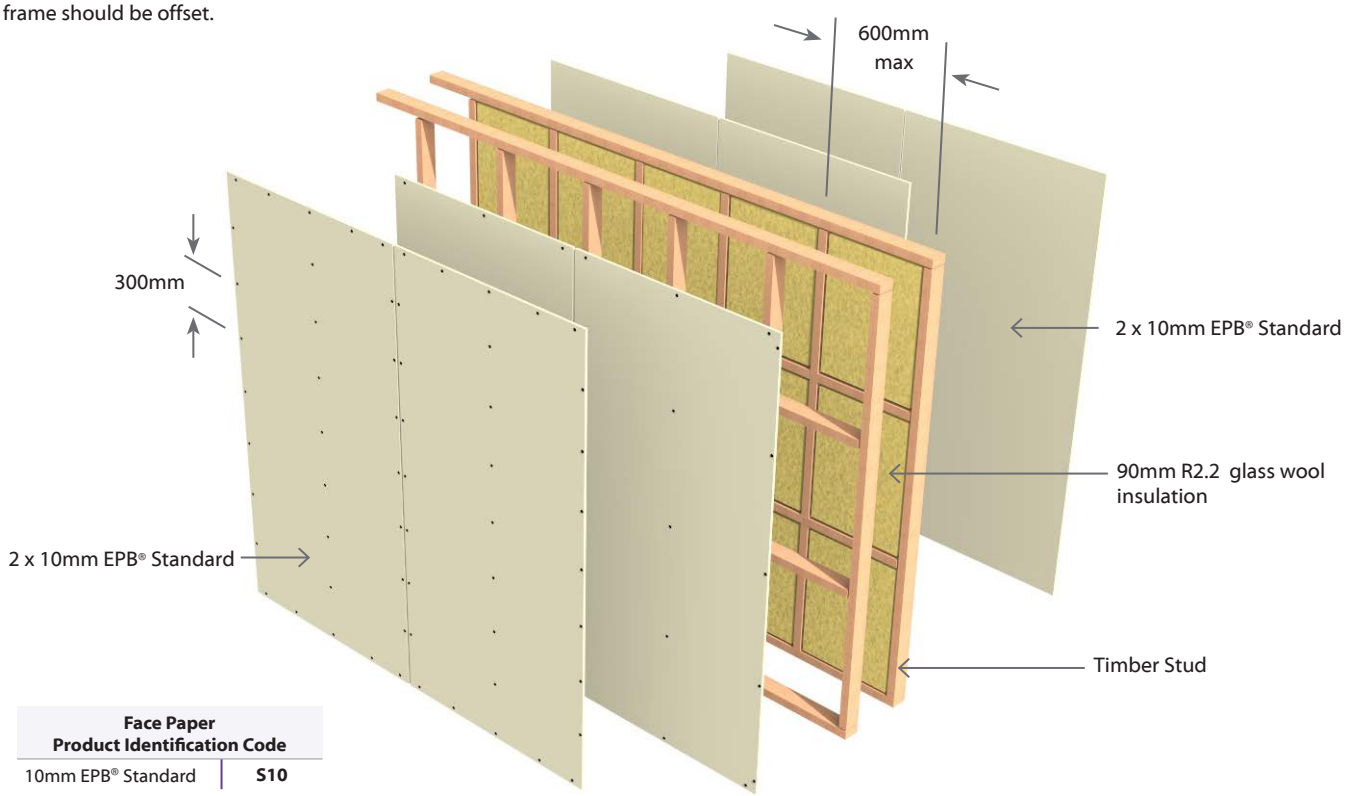

Face Paper Product Identification Code	
10mm EPB® Standard	**S10**

E2TDLA60 Double Timber Frame | Load Bearing | Two Way FRR

2 Layers: 1 Layer of Plasterboard to each side of frame | Full Intertenancy **A**coustic

System Number	Lining Suffix	FRR	Load Bearing Ability	Noise Control		Lining Requirement
				STC	Rw	
E2TDLA60	**-M26**	60/60/60	LB	55*	54	1 x 13mm EPB BraceSmart®/NoiseSmart® each side

Framing

Framing to comply with relevant sections and clauses of NZBC B1: Structure and NZBC B2: Durability.

Studs at 600mm centres maximum.

Nogs at 800mm centre maximum.

Wall Height, Load and Framing Dimension

These are determined by NZS3604 stud tables for load bearing or non-load bearing partitions. Minimum frame dimension is 90 x 45mm. Refer to Minimum partition width.

Minimum Partition Width

In order to achieve the STC ratings in the table above the partition width (excluding the board) shall be a minimum of 205mm. Increasing the partition width would increase STC performance as per the table below.

Stud Depth	Space Between Frames	Partition Width (Excludes Board)	STC Rating
90mm x 2	25mm Min	205mm	+0
90mm x 2	75mm Min	255mm	+2

Wall Sound Absorber

Install Sound Absorber between studs and nogs on both sides of the double frame. Use 90mm thick R2.2 glass wool insulation.

Plasterboard Lining

NB: The installer must look for the Product Identification Code on the face paper to ensure the correct board type is installed. Refer to the Face Paper Product Identification Code table on this page.

One layer of 13mm EPB BraceSmart®/NoiseSmart® lining fixed on each side of timber framing.

Vertical fixing only permitted. Use full height sheets where possible. Sheet joints on opposite side of frame should be offset. All sheet joints must be fixed over solid timber framing. Sheet end butt joints must be formed over nogs. Sheets shall be touch fitted.

Fixing of Linings

Fasteners

System Number	Side One	Side Two
	High Thread Drywall Screws	
E2TDLA60-M26	13mm	13mm
	41 x 6g	41 x 6g

Fastener Centres

Fix at 300mm centres at sheet perimeter and up all other studs.

Place fasteners 50mm from sheet corners along the top and bottom plates. On end studs place additional fasteners 50-60mm vertically and no close than 10mm from plate to stud connections.

Place fasteners minimum 12mm from sheet edges and sheet ends.

Place fasteners at 200mm centres where sheet end butt joints occur.

Acoustic Sealant

A bead of acoustic sealant is required around the perimeter of the framing and the single layer is bedded onto the bead. The perimeter junctions of the wall must be airtight.

Jointing

All fastener heads stopped and all sheet joints reinforced with paper jointing tape and stopped. Wall to ceiling junctions are to be reinforced with paper tape and square stopped or finished with Cornice. All in accordance with EPB® Plasterboard Installation Guide.

STC Reduction Warning

Replacing one or some of the linings above with the equivalent thickness of EPB AquaSmart® could result in the STC falling below full intertenancy requirements. Refer to plasterboard substitution table on page 29 for deatils on STC Performance reduction.

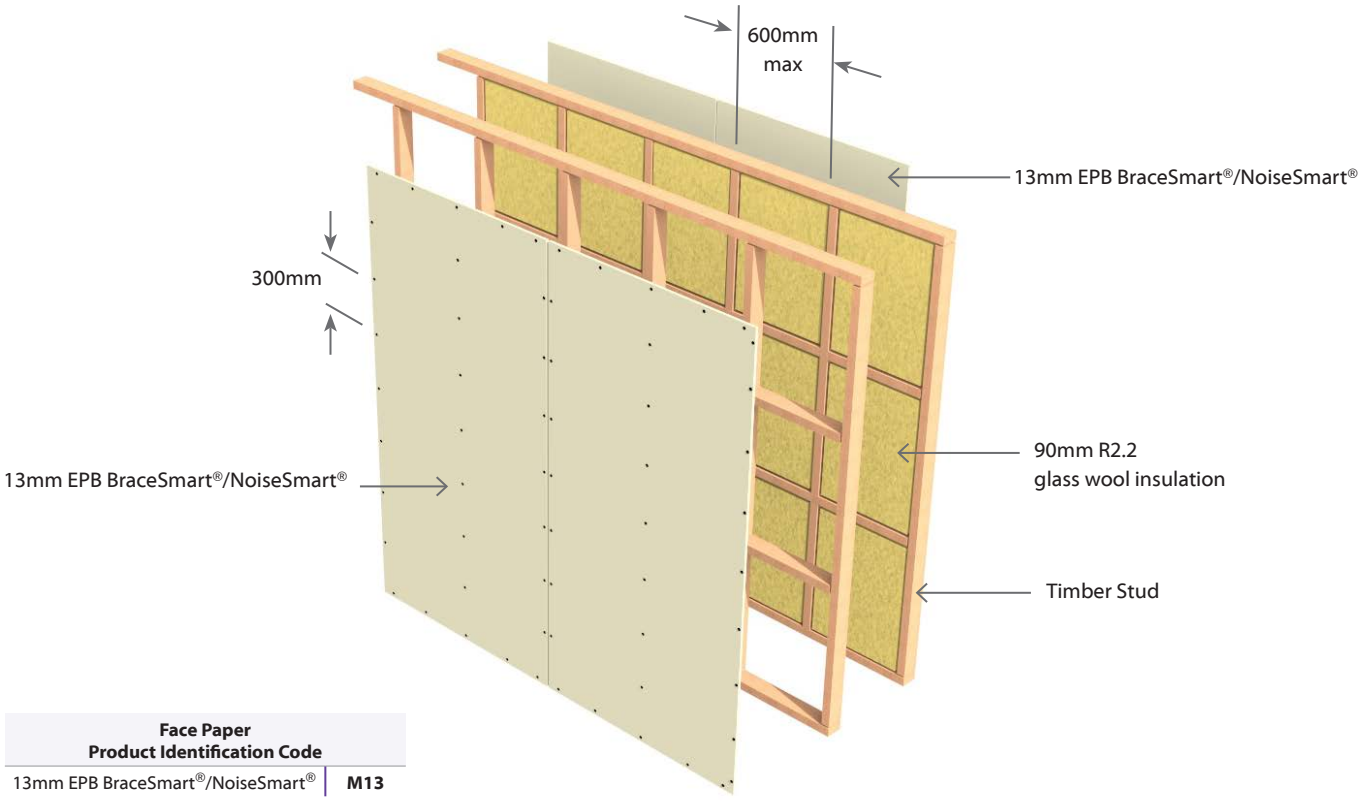

Face Paper Product Identification Code	
13mm EPB BraceSmart®/NoiseSmart®	**M13**

E3TDLA60 Double Timber Frame | Load Bearing | Two Way FRR

3 Layers: 1 Layer of Plasterboard to one side of frame &
2 Layers of Plasterboard to other side of frame

Full Intertenancy Acoustic

System Number	Lining Suffix	FRR	Load Bearing Ability	Noise Control		Lining Requirement
				STC	Rw	
E3TDLA60	-MS39	60/60/60	LB	58	57	1 x 13mm EPB BraceSmart®/NoiseSmart® one side 2 x 13mm EPB® Standard other side
	-M33	60/60/60	LB	59	58	1 x 13mm EPB BraceSmart®/NoiseSmart® one side 2 x 10mm EPB BraceSmart®/NoiseSmart® other side
	-M39	60/60/60	LB	61	60	1 x 13mm EPB BraceSmart®/NoiseSmart® one side 2 x 13mm EPB BraceSmart®/NoiseSmart® other side

Framing

Framing to comply with relevant sections and clauses of NZBC B1: Structure and NZBC B2: Durability.

Studs at 600mm centres maximum.

Nogs at 1350mm centre maximum.

Wall Height, Load and Framing Dimension

These are determined by NZS3604 stud tables for load bearing or non-load bearing partitions. Minimum frame dimension is 90 x 45mm. Refer to Minimum Partition width below.

Minimum Partition Width

In order to achieve the STC ratings in the table above the partition width (excluding the board) shall be a minimum of 205mm. Increasing the partition width would increase STC performance as per the table below.

Stud Depth	Space Between Frames	Partition Width (Excludes Board)	STC Rating
90mm x 2	25mm Min	205mm	+0
90mm x 2	75mm Min	255mm	+2

Wall Sound Absorber

Install Sound Absorber between studs and nogs on one side of the double frame. Use 90mm thick R2.2 glass wool insulation.

Plasterboard Lining

NB: The installer must look for the Product Identification Code on the face paper to ensure the correct board type is installed. Refer to the Face Paper Product Identification Code table on this page.

One layer of EPB® Plasterboard lining on one side of frame and Two layers on the other side of framing as per specified system above. First layer or inner layer on each side of framing to be fixed vertically. Vertical or Horizontal fixing permitted on outer layer only. Use full height or full length sheets where possible. Inner layer joints on opposite side of frame should be offset. All sheet joints must be fixed over solid timber framing. Vertical Joints of the outer layer should be offset 600mm from those of the inner layer. Sheet end butt joints must be formed over nogs. Offset the outer layer joints from the inner layer. Sheets shall be touch fitted.

Fixing of Linings

Fasteners (As per Specified System Above)

System Number	Side One		Side Two
	1st Layer	2nd Layer	Single Layer
	High Thread Drywall Screws		
E3TDLA60-M33	10mm	10mm	13mm
	41 x 6g	51 x 7g	41 x 6g
E3TDLA60-MS39 E3TDLA60-M39	13mm	13mm	13mm
	41 x 6g	51 x 7g	41 x 6g

Fastener Centres

Inner Layer: Fix at 600 centres on vertical studs and 600mm centres horizontally on top and bottom plates.

Single or Outer Layer: Fix at 300mm centres at sheet perimeter and 300mm centres up each stud.

Place fasteners 50mm from sheet corners along the top and bottom plates. On end studs place additional fasteners 50-60mm vertically and no close than 10mm from plate to stud connections.

Place fasteners minimum 12mm from sheet edges and sheet ends.

Place fasteners at 200mm centres where sheet end butt joints occur.

Avoid outer layer screws from hitting inner layer screws.

Acoustic Sealant

A bead of acoustic sealant is required around the perimeter of the framing or the inner layer. Then the single or outer layer is bedded onto the bead. The perimeter junctions of the wall must be airtight.

Jointing

Inner Layer: Unstopped.

Outer or Single Layer: All fastener heads stopped and all sheet joints reinforced with paper jointing tape and stopped. Wall to ceiling junctions are to be reinforced with paper tape and square stopped or finished with Cornice. All in accordance with EPB® Plasterboard Installation Guide.

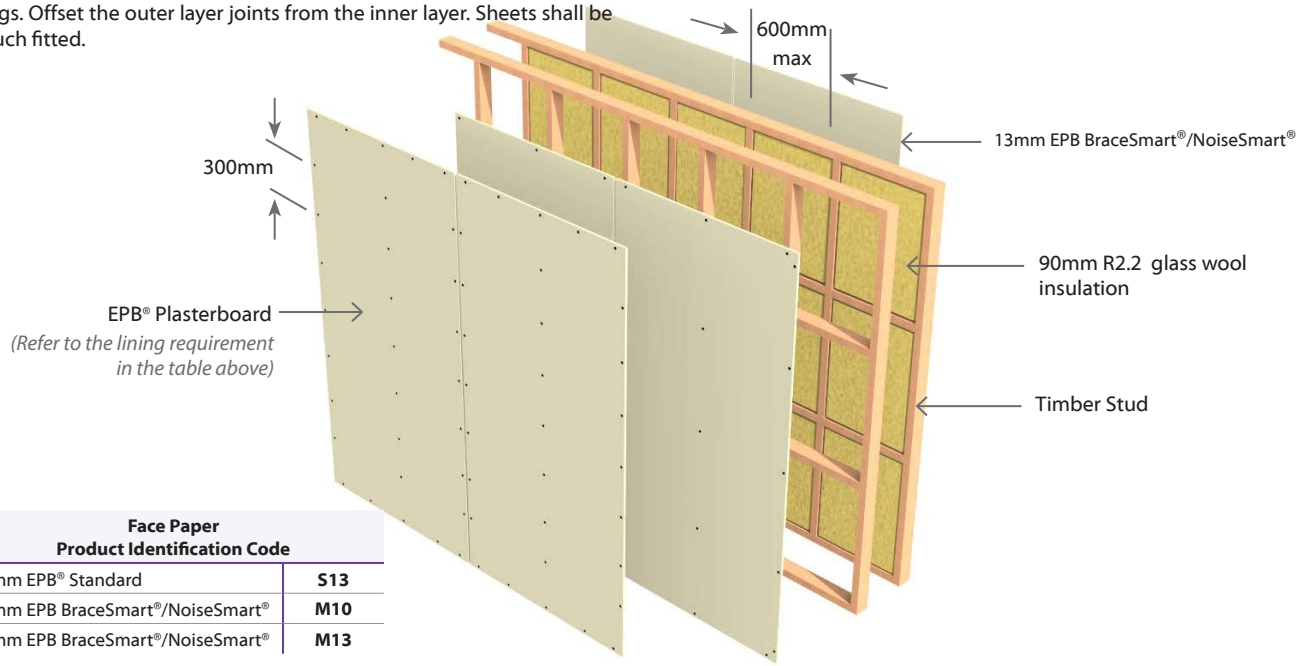

Face Paper Product Identification Code	
13mm EPB® Standard	S13
10mm EPB BraceSmart®/NoiseSmart®	M10
13mm EPB BraceSmart®/NoiseSmart®	M13

E4TDLA60 Double Timber Frame | Load Bearing | Two Way FRR

4 Layers: 2 Layers of Plasterboard to each side of frame | Full Intertenancy **A**coustic

System Number	Lining Suffix	FRR	Load Bearing Ability	Noise Control		Lining Requirement
				STC	Rw	
E4TDLA60	-S46	60/60/60	LB	59	58	1 x 10mm EPB® Standard & 1 x 13mm EPB® Standard each side
	-F40	60/60/60	LB	60	59	2 x 10mm EPB FireSmart® each side
	-S52	60/60/60	LB	61	60	2 x 13mm EPB® Standard each side
	-M40	60/60/60	LB	62	61	2 x 10mm EPB BraceSmart®/NoiseSmart® each side

Framing
Framing to comply with relevant sections and clauses of NZBC B1: Structure and NZBC B2: Durability.

Studs at 600mm centres maximum.

Nogs at 1350mm centre maximum.

Wall Height, Load and Framing Dimension
These are determined by NZS3604 stud tables for load bearing or non-load bearing partitions. Refer to Minimum Partition width.

Minimum Partition Width
In order to achieve the STC ratings in the table above the partition width (excluding the board) shall be a minimum of 205mm. Increasing the partition width would increase STC performance as per the table below.

Stud Depth	Space Between Frames	Partition Width (Excludes Board)	STC Rating
90mm x 2	25mm Min	205mm	+0
90mm x 2	75mm Min	255mm	+2

Wall Sound Absorber
Install Sound Absorber between studs and nogs on one side of the double frame. Use 90mm thick R2.2 glass wool insulation.

Plasterboard Lining
NB: The installer must look for the Product Identification Code on the face paper to ensure the correct board type is installed. Refer to the Face Paper Product Identification Code table on this page.

Two layers of EPB® Plasterboard lining on one side of frame and Two layers on the other side of framing as per specified system above.

First layer or inner layer on each side of framing to be fixed vertically. Vertical or Horizontal fixing permitted on outer layer only. Use full height or full length sheets where possible. Inner layer joints on opposite side of frame should be offset. All sheet joints must be fixed over solid timber framing. Vertical Joints of the outer layer should be offset 600mm from those of the inner layer. Sheet end butt joints must be formed over nogs. Offset the outer layer joints from the inner layer. Sheets shall be touch fitted.

Fixing of Linings
Fasteners (As per Specified System Above)

System Number	Side One		Side Two	
	1st Layer	2nd Layer	1st Layer	2nd Layer
	High Thread Drywall Screws			
E4TDLA60-F40 E4TDLA60-M40	10mm	10mm	10mm	10mm
	41 x 6g	51 x 7g	41 x 6g	51 x 7g
E4TDLA60-S46	10mm	13mm	10mm	13mm
	41 x 6g	51 x 7g	41 x 6g	51 x 7g
E4TDLA60-S52	13mm	13mm	13mm	13mm
	41 x 6g	51 x 7g	41 x 6g	51 x 7g

Fastener Centres

Inner Layer: Fix at 600mm centres at sheet perimeter and all studs.

Outer Layer: Fix at 300mm centres at sheet perimeter and all studs.

Place fasteners 50mm from sheet corners along the top and bottom plates. On end studs place additional fasteners 50-60mm vertically and no close than 10mm from plate to stud connections.

Place fasteners minimum 12mm from sheet edges and sheet ends.

Place fasteners at 200mm centres where sheet end butt joints occur.

Avoid outer layer screws from hitting inner layer screws.

Acoustic Sealant
A bead of acoustical sealant is required around the perimeter of the inner layer and the outer layer is bedded onto the bead. The perimeter junctions of the wall must be airtight.

Jointing
Inner Layer: Unstopped.

Outer Layer: All fastener heads stopped and all sheet joints reinforced with paper jointing tape and stopped. Wall to ceiling junctions are to be reinforced with paper tape and square stopped or finished with Cornice. All in accordance with EPB® Plasterboard Installation Guide.

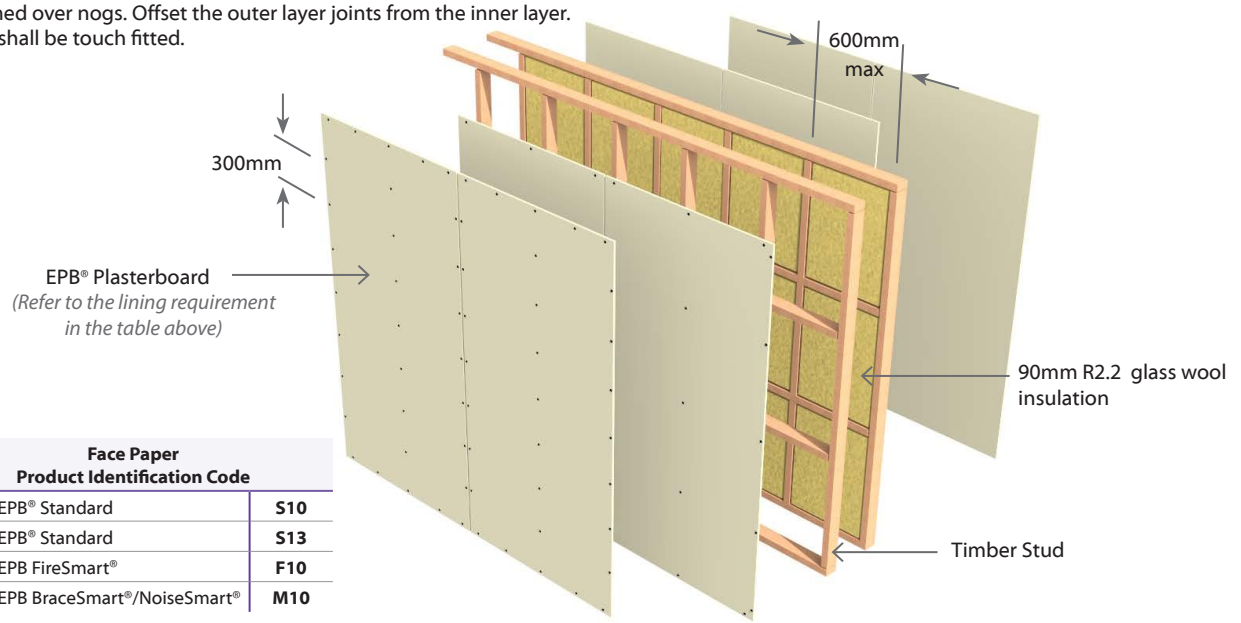

Face Paper Product Identification Code	
10mm EPB® Standard	S10
13mm EPB® Standard	S13
10mm EPB FireSmart®	F10
10mm EPB BraceSmart®/NoiseSmart®	M10

E2TDLA75 Double Timber Frame | Load Bearing | Two Way FRR

2 Layers: 1 Layer of Plasterboard to each side of frame | Full Intertenancy **A**coustic

System Number	Lining Suffix	FRR	Load Bearing Ability	Noise Control		Lining Requirement
				STC	Rw	
E2TDLA75	**-F32**	75/75/75	LB	56	55	1 x 16mm EPB FireSmart® each side

Framing

Framing to comply with relevant sections and clauses of NZBC B1: Structure and NZBC B2: Durability.

Studs at 600mm centres maximum.

Nogs at 800mm centre maximum.

Wall Height, Load and Framing Dimension

These are determined by NZS3604 stud tables for load bearing or non-load bearing partitions. Refer to Minimum partition width.

Minimum Partition Width

In order to achieve the STC ratings in the table above the partition width (excluding the board) shall be a minimum of 205mm. Increasing the partition width would increase STC performance as per the table below.

Stud Depth	Space Between Frames	Partition Width (Excludes Board)	STC Rating
90mm x 2	25mm Min	205mm	+0
90mm x 2	75mm Min	255mm	+2

Wall Sound Absorber

Install Sound Absorber between studs and nogs on both sides of the double frame. Use 90mm thick R2.2 glass wool insulation.

Plasterboard Lining

NB: The installer must look for the Product Identification Code on the face paper to ensure the correct board type is installed. Refer to the Face Paper Product Identification Code table on this page.

One layer of 16mm EPB FireSmart® lining fixed on each side of timber framing.

Vertical fixing only permitted. Use full height sheets where possible. All sheet joints must be fixed over solid timber framing. Sheet end butt joints must be formed over nogs. Sheets shall be touch fitted.

Fixing of Linings

Fasteners

System Number	Side One	Side Two
	High Thread Drywall Screws	
E2TDLA75-F32	16mm	16mm
	51 x 7g	51 x 7g

Fastener Centres

Fix at 300mm centres at sheet perimeter and up all other studs.

Place fasteners 50mm from sheet corners along the top and bottom plates. On end studs place additional fasteners 50-60mm vertically and no close than 10mm from plate to stud connections.

Place fasteners minimum 12mm from sheet edges and sheet ends.

Place fasteners at 200mm centres where sheet end butt joints occur.

Acoustic Sealant

A bead of acoustic sealant is required around the perimeter of the framing and the single layer is bedded onto the bead. The perimeter junctions of the wall must be airtight.

Jointing

All fastener heads stopped and all sheet joints reinforced with paper jointing tape and stopped. Wall to ceiling junctions are to be reinforced with paper tape and square stopped or finished with Cornice. All in accordance with EPB® Plasterboard Installation Guide.

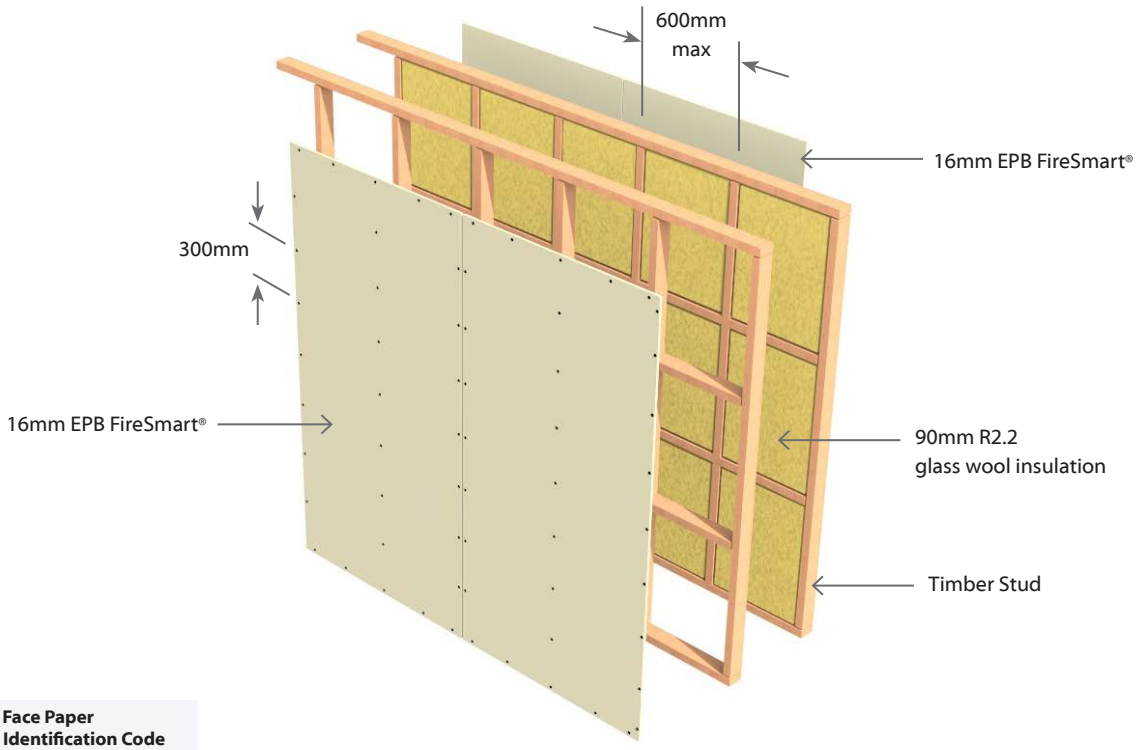

Face Paper Product Identification Code	
16mm EPB FireSmart®	**F16**

E4TDLA90 Double Timber Frame | Load Bearing | Two Way FRR

4 Layers: 2 Layers of Plasterboard to each side of frame | Full Intertenancy **A**coustic

System Number	Lining Suffix	FRR	Load Bearing Ability	Noise Control		Lining Requirement
				STC	Rw	
E4TDLA90	-F52	90/90/90	LB	64	63	2 x 13mm EPB FireSmart® each side
	-M52	90/90/90	LB	67	66	2 x 13mm EPB BraceSmart®/NoiseSmart® each side

Framing

Framing to comply with relevant sections and clauses of NZBC B1: Structure and NZBC B2: Durability.

Studs at 600mm centres maximum.

Nogs at 1350mm centre maximum.

Wall Height, Load and Framing Dimension

These are determined by NZS3604 stud tables for load bearing or non-load bearing partitions. Refer to Minimum Partition width.

Minimum Partition Width

In order to achieve the STC ratings in the table above the partition width (excluding the board) shall be a minimum of 205mm. Increasing the partition width would increase STC performance as per the table below.

Stud Depth	Space Between Frames	Partition Width (Excludes Board)	STC Rating
90mm x 2	25mm Min	205mm	+0
90mm x 2	75mm Min	255mm	+2

Wall Sound Absorber

Install Sound Absorber between studs and nogs on one side of the double frame. Use 90mm thick R2.2 glass wool insulation.

Plasterboard Lining

NB: The installer must look for the Product Identification Code on the face paper to ensure the correct board type is installed. Refer to the Face Paper Product Identification Code table on this page.

Two layers of EPB® Plasterboard lining fixed on each side of timber framing as per specified system above.

First layer or inner layer on each side of framing to be fixed vertically. Vertical or Horizontal fixing permitted on outer layer only. Use full height or full length sheets where possible. Inner layer joints on opposite side of frame should be offset.

All sheet joints must be fixed over solid timber framing. Vertical Joints of the outer layer should be offset 600mm from those of the inner layer. Sheet end butt joints must be formed over nogs and offset the outer layer joints from the inner layer. Sheets shall be touch fitted.

Fixing of Linings

Fasteners (As per Specified System Above)

System Number	1st Layer	2nd Layer
	High Thread Drywall Screws	
E4TDLA90-F52	13mm	13mm
E4TDLA90-M52	41 x 6g	51 x 7g

Fastener Centres

Inner Layer: Fix at 600mm centres at sheet perimeter and all studs.

Outer Layer: Fix at 300mm centres at sheet perimeter and all studs.

Place fasteners 50mm from sheet corners along the top and bottom plates. On end studs place additional fasteners 50-60mm vertically and no close than 10mm from plate to stud connections.

Place fasteners minimum 12mm from sheet edges and sheet ends.

Place fasteners at 200mm centres where sheet end butt joints occur.

Avoid outer layer screws from hitting inner layer screws.

Acoustic Sealant

A bead of acoustical sealant is required around the perimeter of the inner layer and the outer layer is bedded onto the bead. The perimeter junctions of the wall must be airtight.

Jointing

Inner Layer: Unstopped.

Outer Layer: All fastener heads stopped and all sheet joints reinforced with paper jointing tape and stopped. Wall to ceiling junctions are to be reinforced with paper tape and square stopped or finished with Cornice. All in accordance with EPB® Plasterboard Installation Guide.

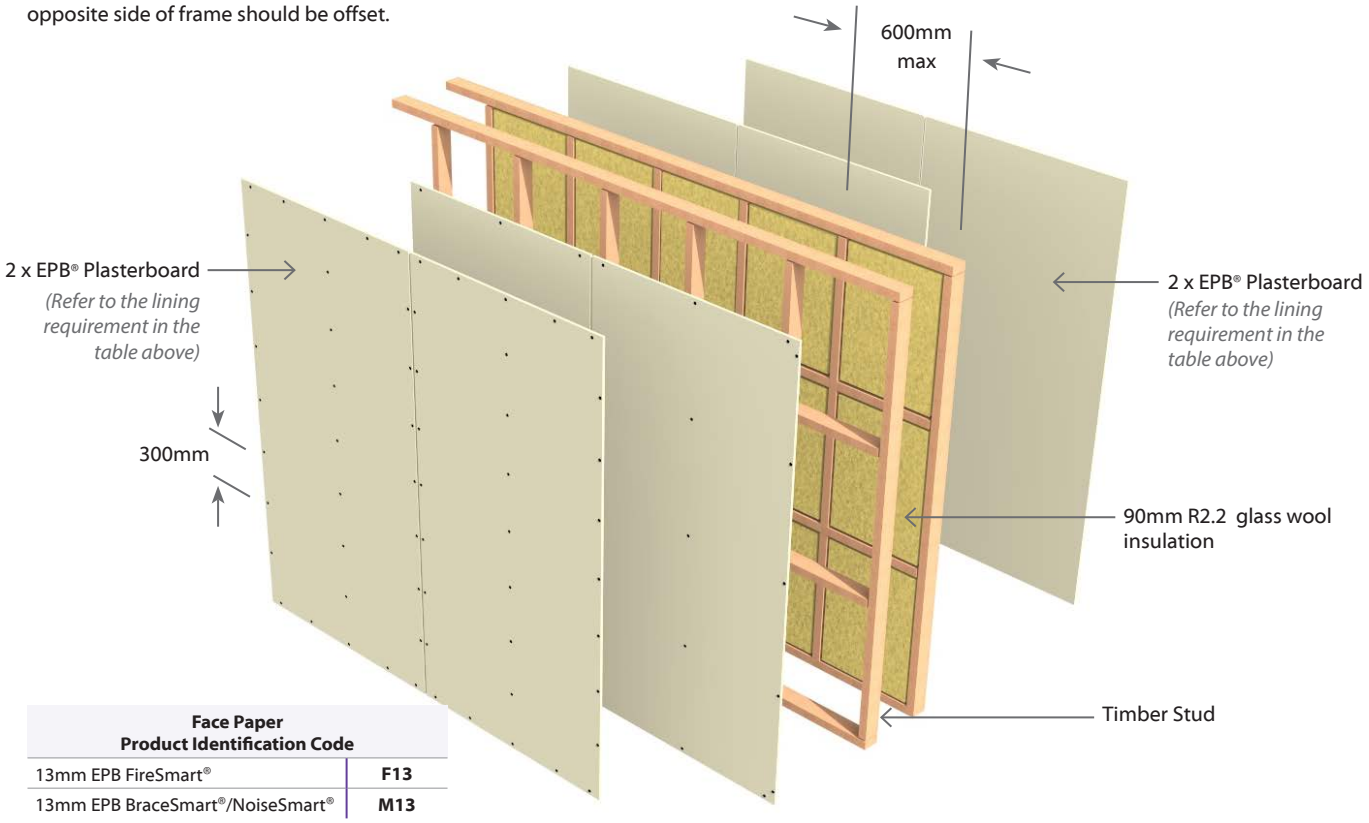

Face Paper Product Identification Code	
13mm EPB FireSmart®	F13
13mm EPB BraceSmart®/NoiseSmart®	M13

EJV2TDLA30 EPB Plasterboard & James Hardie Villaboard™ Lining

Two Way FRR

Full Intertenancy Acoustic - Internal Wall - Double Timber Frame

Load Bearing

System Number	Lining Suffix	FRR	Load Bearing Ability	Noise Control		Lining Requirement
				STC	Rw	
EJV2TDLA30	-F10	30/30/30	LB	59	58	1 x 10mm EPB FireSmart® and 1 x 6mm or 9mm James Hardie Villaboard™ Lining on each side

Framing, Wall Height, Load and Framing Dimension

Timber framing must be in accordance with NZS3604 stud tables or SED complying with AS/NZS 1170 and NZS 3603. Minimum framing dimension is 90 x 45mm. Nogs must be in place at a maximum of 800mm centres. Maximum stud spacings are 600mm centres.

Minimum Partition Width

In order to achieve the STC ratings in the table above the partition width (excluding the board) shall be a minimum of 205mm. Increasing the partition width would increase STC performance as per the table below.

Stud Depth	Space Between Frames	Partition Width (Excludes Board)	STC Rating
90mm x 2	25mm Min	205mm	+0
90mm x 2	75mm Min	255mm	+2

Wall Sound Absorber

Install Sound Absorber between studs and nogs on both sides of the double frame. Use 90mm thick R2.2 glass wool insulation.

EPB® Plasterboard Lining *(Inner Layer)*

NB: The installer must look for the Product Identification Code on the face paper to ensure the correct board type is installed. Refer to the Face Paper Product Identification Code table on this page.

One layer of 10mm EPB FireSmart® lining fixed to each side of framing as the inner layer. Vertical fixing only permitted. Use full height sheets where possible. Inner layer joints on opposite side of frame should be offset. All sheet joints must be fixed over solid timber framing. Sheets shall be touch fitted.

Fixing of EPB® Plasterboard Linings

Fasteners

41mm x 6g High Thread Drywall screws

Fastener Centres

Fix at 300mm centres at sheet perimeter and up all other studs.

Place fasteners 50mm from sheet corners along the top and bottom plates. On end studs place additional fasteners 50-60mm vertically and no close than 10mm from plate to stud connections.

Place fasteners no closer than 12mm from the sheet edges and 18mm from sheet ends. Place fasteners at 200mm centres where sheet end butt joints occur.

Acoustic Sealant

A bead of acoustical sealant is required around the perimeter of the inner layer and the outer layer is bedded onto the bead. The perimeter junctions of the wall must be airtight.

Jointing

Inner Layer: Unstopped.

James Hardie Villaboard™ Lining *(Outer Layer)*

One layer of 6mm or 9mm James Hardie Villaboard™ Lining fixed to each side of framing as the outer layer. Vertical Joints of the 9mm Villaboard™ should be offset 600mm from those of the inner layer EPB Plasterbaord. **Fasteners & Fastener Centres**

Minimum 50mm x 2.8mm Fibre Cement nails at 150mm centres to entire framing.

Fixing and Finishing

Refer to James Hardie Villaboard™ Lining Installation Manual for information regarding fixing and finishing.

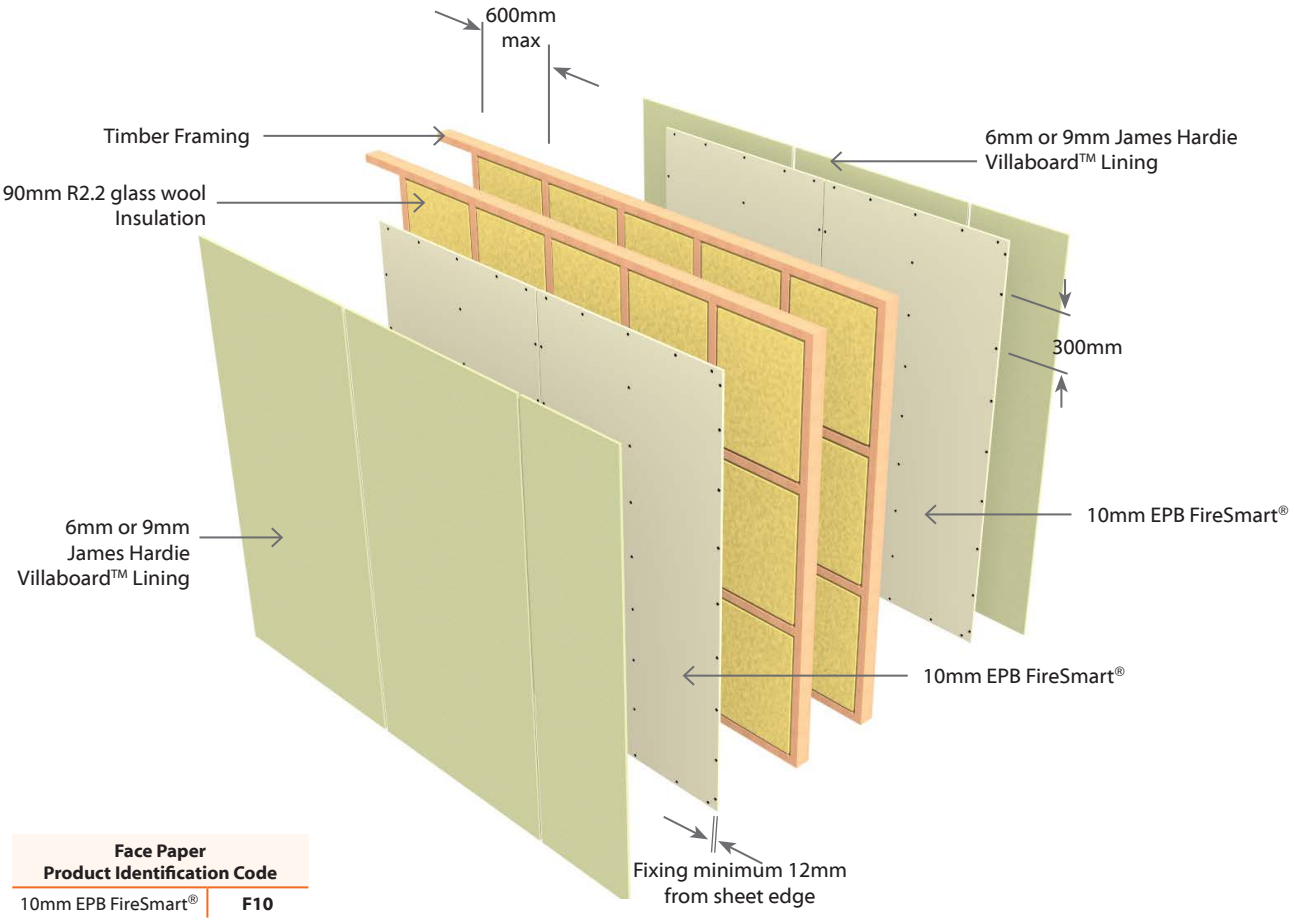

Face Paper Product Identification Code	
10mm EPB FireSmart®	F10

EJV2TDLA60 EPB Plasterboard & James Hardie Villaboard™ Lining

Two Way FRR

Full Intertenancy Acoustic - Internal Wall - Double Timber Frame

Load Bearing

System Number	Lining Suffix	FRR	Load Bearing Ability	Noise Control		Lining Requirement
				STC	Rw	
EJV2TDLA60	-F13	60/60/60	LB	62	61	1 x 13mm EPB FireSmart® and 1 x 6mm or 9mm James Hardie Villaboard™ Lining on each side

Framing, Wall Height, Load and Framing Dimension

Timber framing must be in accordance with NZS3604 stud tables or SED complying with AS/NZS 1170 and NZS 3603. Minimum framing dimension is 90 x 45mm. Nogs must be in place at a maximum of 800mm centres. Maximum stud spacings are 600mm centres.

Minimum Partition Width

In order to achieve the STC ratings in the table above the partition width (excluding the board) shall be a minimum of 205mm. Increasing the partition width would increase STC performance as per the table below.

Stud Depth	Space Between Frames	Partition Width (Excludes Board)	STC Rating
90mm x 2	25mm Min	205mm	+0
90mm x 2	75mm Min	255mm	+2

Wall Sound Absorber

Install Sound Absorber between studs and nogs on both sides of the double frame. Use 90mm thick R2.2 glass wool insulation.

EPB® Plasterboard Lining *(Inner Layer)*

NB: The installer must look for the Product Identification Code on the face paper to ensure the correct board type is installed. Refer to the Face Paper Product Identification Code table on this page.

One layer of 13mm EPB FireSmart® lining fixed to each side of framing as the inner layer. Vertical fixing only permitted. Use full height sheets where possible. Inner layer joints on opposite side of frame should be offset. All sheet joints must be fixed over solid timber framing. Sheets shall be touch fitted.

Fixing of EPB® Plasterboard Linings

Fasteners

41mm x 6g High Thread Drywall screws

Fastener Centres

Fix at 300mm centres at sheet perimeter and up all other studs.

Place fasteners 50mm from sheet corners along the top and bottom plates. On end studs place additional fasteners 50-60mm vertically and no close than 10mm from plate to stud connections.

Place fasteners no closer than 12mm from the sheet edges and 18mm from sheet ends. Place fasteners at 200mm centres where sheet end butt joints occur.

Acoustic Sealant

A bead of acoustical sealant is required around the perimeter of the inner layer and the outer layer is bedded onto the bead. The perimeter junctions of the wall must be airtight.

Jointing

Inner Layer: Unstopped.

James Hardie Villaboard™ Lining *(Outer Layer)*

One layer of 6mm or 9mm James Hardie Villaboard™ Lining fixed to each side of framing as the outer layer. Vertical Joints of the 9mm Villaboard™ should be offset 600mm from those of the inner layer EPB Plasterbaord.

Fasteners & Fastener Centres

Minimum 50mm x 2.8mm Fibre Cement nails at 150mm centres to entire framing.

Fixing and Finishing

Refer to James Hardie Villaboard™ Lining Installation Manual for information regarding fixing and finishing.

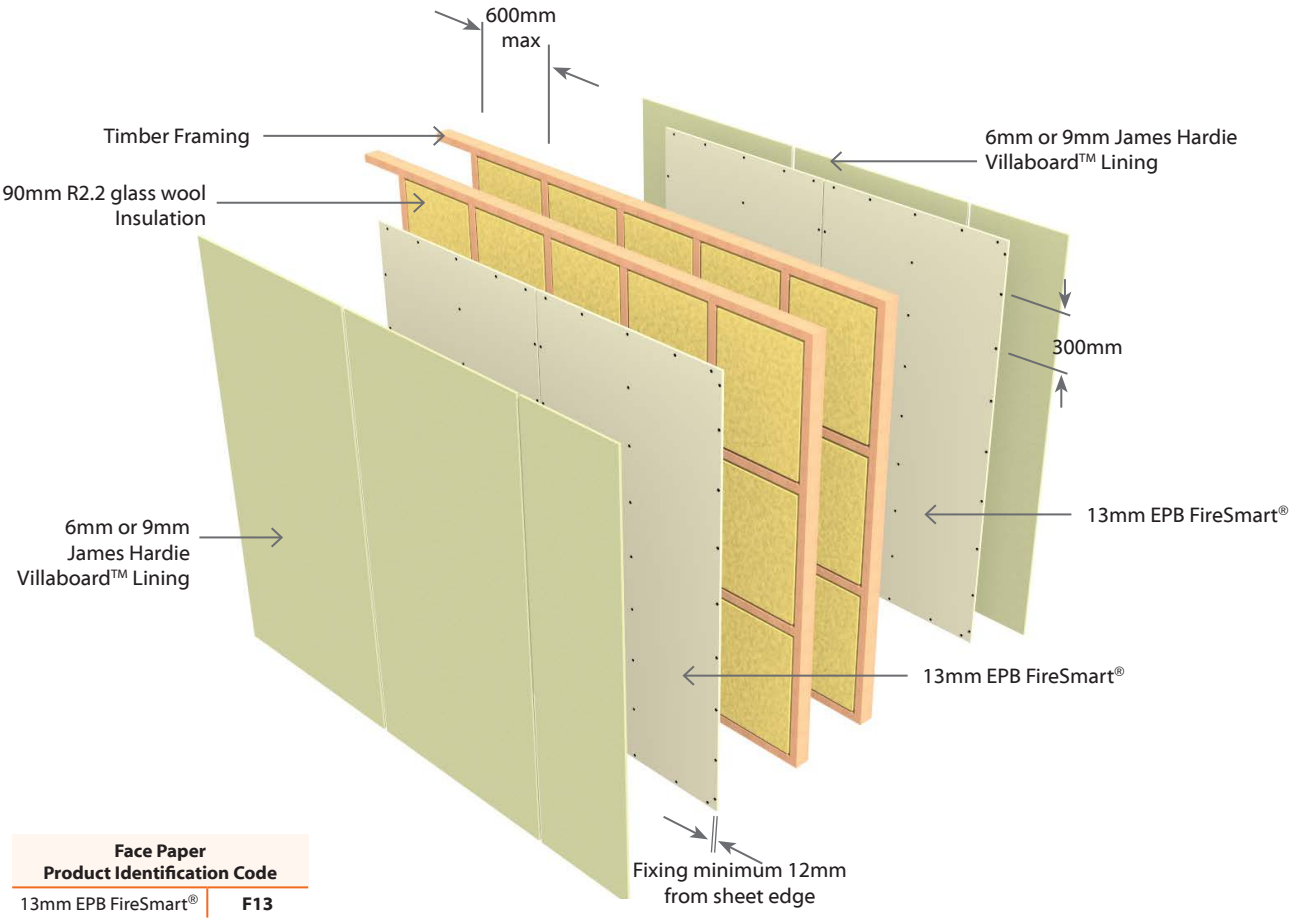

Face Paper Product Identification Code	
13mm EPB FireSmart®	F13

E3TMLA30 Single Timber Frame with Resilient Mount | Load Bearing | Two Way FRR

3 Layers: 1 Layer of Plasterboard on Framing side &
2 Layers of Plasterboard on Mount side

Full Intertenancy Acoustic

System Number	Lining Suffix	FRR	Load Bearing Ability	Noise Control		Lining Requirement
				STC	Rw	
E3TMLA30	-S39	30/30/30	LB	55	54	Framing Side: 1 x 13mm EPB® Standard Mount Side: 2 x 13mm EPB® Standard
	-M30	30/30/30	LB	56	55	Framing Side: 1 x 10mm EPB BraceSmart®/NoiseSmart® Mount Side: 2 x 10mm EPB BraceSmart®/NoiseSmart®

Framing

Framing to comply with relevant sections and clauses of NZBC B1: Structure and NZBC B2: Durability.

Studs at 600mm centres maximum.

Nogs at 1350mm centre maximum.

Wall Height, Load and Framing Dimension

These are determined by NZS3604 stud tables for load bearing or non-load bearing partitions. Minimum 90 x 45mm frame dimension.

Minimum Partition Width

In order to achieve the STC ratings in the table above the partition width (excluding the board) shall be a minimum of 130mm.

Stud Depth	Mount + Channel	Lining Suffix	Total Plasterboard thickness	Total Partition Width
90mm	40mm	M30	30mm	160mm
		S39	39mm	169mm

Wall Sound Absorber

Install Sound Absorber between studs and nogs of the frame.

Use 90mm thick R2.2 glass wool insulation.

Acoustic Resilient Mount

The Resilient Mount shall be fixed to the studs at 600mm centres vertically and on every alternative stud using 63mm x 8g self tapping screw. When adjusting the clip for depth, 3mm rubber must remain between the underside of the steel spacer head and the furring channel. The Furring channels are clipped horizontally into the Mounts. Joints must be made as close as possible to the clips.

Plasterboard Lining

NB: The installer must look for the Product Identification Code on the face paper to ensure the correct board type is installed. Refer to the Face Paper Product Identification Code table on this page.

One layer of EPB® Plasterboard lining fixed vertically on framing side and Two layers fixed vertically on the furring channel on the other side as per specified system above.

Vertical fixing only permitted. Vertical joints of outer layer should be offset by 600mm from those of the inner layer. Use full height sheets where possible. All sheet joints on the framing side must be fixed over solid timber framing. Sheet end butt joints must be formed over nogs or furring channels and offset the outer layer joints from the inner layer. Sheets shall be touch fitted.

Fixing of Linings

Fasteners (As per Specified System Above)

System Number	Furring Channel Side		Framing Side
	1st Layer	2nd Layer	Single Layer
	Self-Tapping Drywall Screws		High Thread Drywall Screws
E3TMLA30-M30	10mm	10mm	13mm
	41 x 6g	51 x 7g	41 x 6g
E3TMLA30-S39	13mm	13mm	13mm
	41 x 6g	51 x 7g	41 x 6g

Fastener Centres

Framing Side: Fix at 300mm centres at sheet perimeter and up each stud.

Resilient Mount Side: Fix 300mm centres along each furring channel.

Place fasteners minimum 12mm from sheet edges and sheet ends.

Place fasteners at 200mm centres where sheet end butt joints occur.

Avoid outer layer screws from hitting inner layer screws.

Acoustic Sealant

A bead of acoustic sealant is required around the perimeter of the framing or the inner layer. The single or outer layer is then bedded onto the bead. The perimeter junctions of the wall must be airtight.

Jointing

Inner Layer: Unstopped.

Outer or Single Layer: All fastener heads stopped and all sheet joints reinforced and stopped. Wall to ceiling junctions are to be reinforced with paper tape and square stopped or finished with Cornice. All in accordance with EPB® Plasterboard Installation Guide.

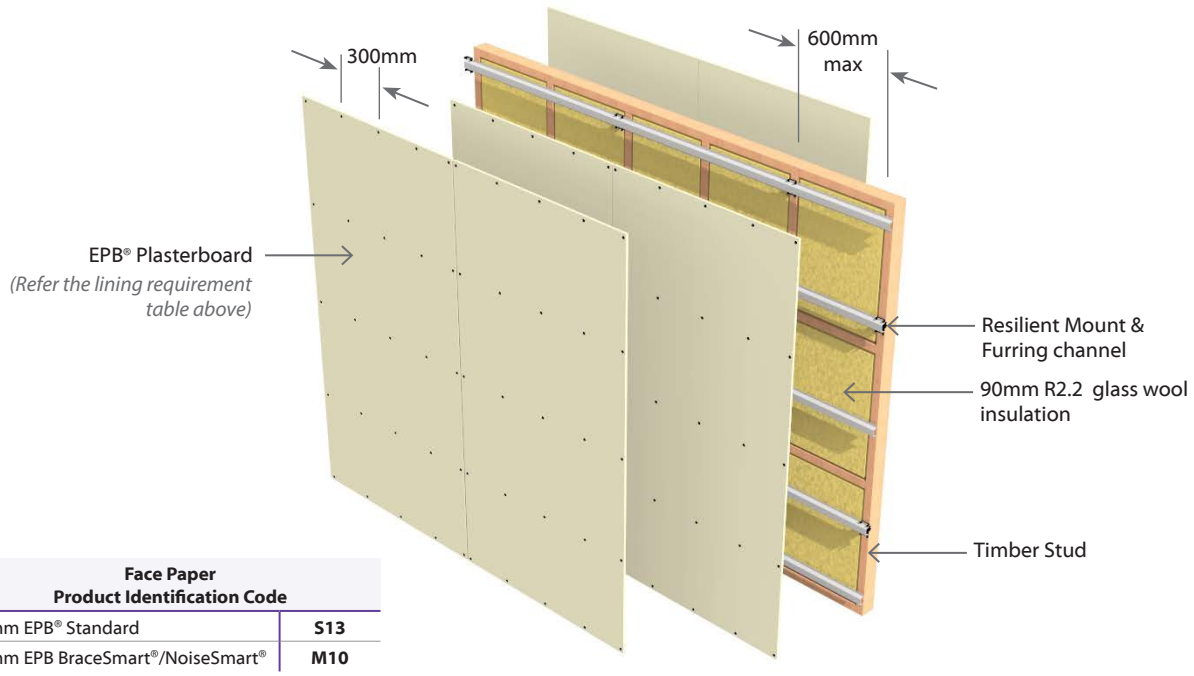

Face Paper Product Identification Code	
13mm EPB® Standard	S13
10mm EPB BraceSmart®/NoiseSmart®	M10

E4TMLA30 Single Timber Frame with Resilient Mount | Load Bearing | Two Way FRR

4 Layers: 2 Layers of Plasterboard to each side of frame | Full Intertenancy Acoustic

System Number	Lining Suffix	FRR	Load Bearing Ability	Noise Control		Lining Requirement
				STC	Rw	
E4TMLA30	**-F40**	30/30/30	LB	58	57	Framing Side: 2 x 10mm EPB FireSmart® Mount Side: 2 x 10mm EPB FireSmart®

Framing

Framing to comply with relevant sections and clauses of NZBC B1: Structure and NZBC B2: Durability.

Studs at 600mm centres maximum.

Nogs at 1350mm centre maximum.

Wall Height, Load and Framing Dimension

These are determined by NZS3604 stud tables for load bearing or non-load bearing partitions. Minimum frame dimension 90 x 45mm.

Minimum Partition Width

In order to achieve the STC ratings in the table above the partition width (excluding the board) shall be a minimum of 130mm.

Stud Depth	Mount + Channel	Lining Suffix	Total Plasterboard thickness	Total Partition Width
90mm	40mm	S40	40mm	170mm

Wall Sound Absorber

Install Sound Absorber between studs and nogs of the frame.

Use 90mm thick R2.2 glass wool insulation.

Acoustic Resilient Mount

The Resilient Mount shall be fixed to the studs at 600mm centres vertically and on every alternative stud using 63mm x 8g self tapping screw. When adjusting the clip for depth, 3mm rubber must remain between the underside of the steel spacer head and the furring channel. The Furring channels are clipped horizontally into the Mounts. Joints must be made as close as possible to the clips.

Plasterboard Lining

NB: The installer must look for the Product Identification Code on the face paper to ensure the correct board type is installed. Refer to the Face Paper Product Identification Code table on this page.

Two layers of 10mm EPB FireSmart® lining fixed vertically on each side of the timber framing.

Vertical fixing only permitted. Vertical joints of outer layer should be offset by 600mm from those of the inner layer. Use full height sheets where possible. All sheet joints on the framing side must be fixed over solid timber framing. Sheet end butt joints must be formed over nogs or furring channels and offset the outer layer joints from the inner layer. Sheets shall be touch fitted.

Fixing of Linings

Fasteners

System Number	Furring Channel Side		Framing Side	
	1st Layer	2nd Layer	1st Layer	2nd Layer
	Self-Tapping Drywall Screws		High Thread Drywall Screws	
E4TMLA30-F40	10mm 25 x 6g	10mm 32 x 6g	10mm 41 x 6g	10mm 51 x 7g

Fastener Centres

Framing Side: Fix at 300mm centres at sheet perimeter and up each stud.

Resilient Mount Side: Fix 300mm centres along each furring channel.

Place fasteners minimum 12mm from sheet edges and sheet ends.

Place fasteners at 200mm centres where sheet end butt joints occur.

Avoid outer layer screws from hitting inner layer screws.

Acoustic Sealant

A bead of acoustical sealant is required around the perimeter of the inner layer and the outer layer is bedded onto the bead. The perimeter junctions of the wall must be airtight.

Jointing

Inner Layer: Unstopped.

Outer Layer: All fastener heads stopped and all sheet joints reinforced with paper jointing tape and stopped. Wall to ceiling junctions are to be reinforced with paper tape and square stopped or finished with Cornice. All in accordance with EPB® Plasterboard Installation Guide.

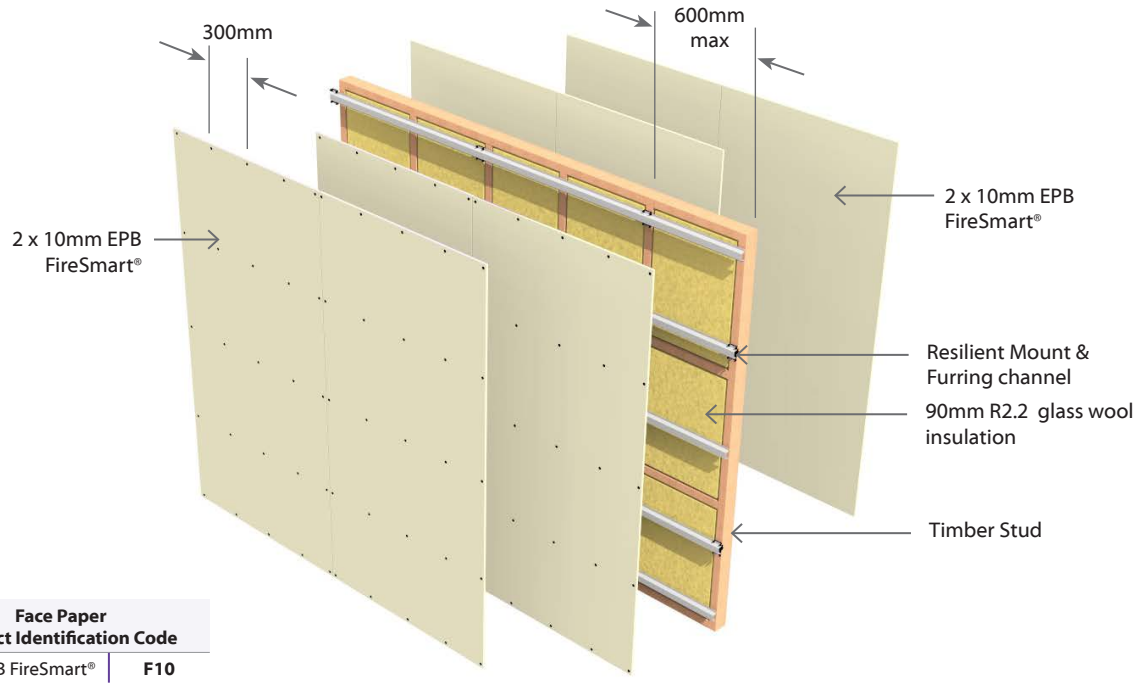

Face Paper Product Identification Code	
10mm EPB FireSmart®	**F10**

E4TMLA45 Single Timber Frame with Resilient Mount | Load Bearing | Two Way FRR

4 Layers: 2 Layers of Plasterboard to each side of frame | Full Intertenancy Acoustic

System Number	Lining Suffix	FRR	Load Bearing Ability	Noise Control		Lining Requirement
				STC	Rw	
E4TMLA45	**-S52**	45/45/45	LB	61	60	Framing Side: 2 x 13mm EPB® Standard Mount Side: 2 x 13mm EPB® Standard

Framing

Framing to comply with relevant sections and clauses of NZBC B1: Structure and NZBC B2: Durability.

Studs at 600mm centres maximum.

Nogs at 1350mm centre maximum.

Wall Height, Load and Framing Dimension

These are determined by NZS3604 stud tables for load bearing or non-load bearing partitions. Minimum frame dimension 90 x 45mm.

Minimum Partition Width

In order to achieve the STC ratings in the table above the partition width (excluding the board) shall be a minimum of 130mm.

Stud Depth	Mount + Channel	Lining Suffix	Total Plasterboard thickness	Total Partition Width
90mm	40mm	S52	52mm	182mm

Wall Sound Absorber

Install Sound Absorber between studs and nogs of the frame.

Use 90mm thick R2.2 glass wool insulation.

Acoustic Resilient Mount

The Resilient Mount shall be fixed to the studs at 600mm centres vertically and on every alternative stud using 63mm x 8g self tapping screw. When adjusting the clip for depth, 3mm rubber must remain between the underside of the steel spacer head and the furring channel. The Furring channels are clipped horizontally into the Mounts. Joints must be made as close as possible to the clips.

Plasterboard Lining

NB: The installer must look for the Product Identification Code on the face paper to ensure the correct board type is installed. Refer to the Face Paper Product Identification Code table on this page.

Two layers of 13mm EPB® Standard lining fixed vertically on each side of the timber framing.

Vertical fixing only permitted. Vertical joints of outer layer should be offset by 600mm from those of the inner layer. Use full height sheets where possible. All sheet joints on the framing side must be fixed over solid timber framing. Sheet end butt joints must be formed over nogs or furring channels and offset the outer layer joints from the inner layer. Sheets shall be touch fitted.

Fixing of Linings

Fasteners

System Number	Furring Channel Side		Framing Side	
	1st Layer	2nd Layer	1st Layer	2nd Layer
	Self-Tapping Drywall Screws		High Thread Drywall Screws	
E4TMLA45-S52	13mm	13mm	13mm	13mm
	25 x 6g	41 x 6g	41 x 6g	51 x 7g

Fastener Centres

Framing Side: Fix at 300mm centres at sheet perimeter and up each stud.

Resilient Mount Side: Fix 300mm centres along each furring channel.

Place fasteners minimum 12mm from sheet edges and sheet ends.

Place fasteners at 200mm centres where sheet end butt joints occur.

Avoid outer layer screws from hitting inner layer screws.

Acoustic Sealant

A bead of acoustical sealant is required around the perimeter of the inner layer and the outer layer is bedded onto the bead. The perimeter junctions of the wall must be airtight.

Jointing

Inner Layer: Unstopped.

Outer Layer: All fastener heads stopped and all sheet joints reinforced with paper jointing tape and stopped. Wall to ceiling junctions are to be reinforced with paper tape and square stopped or finished with Cornice. All in accordance with EPB® Plasterboard Installation Guide.

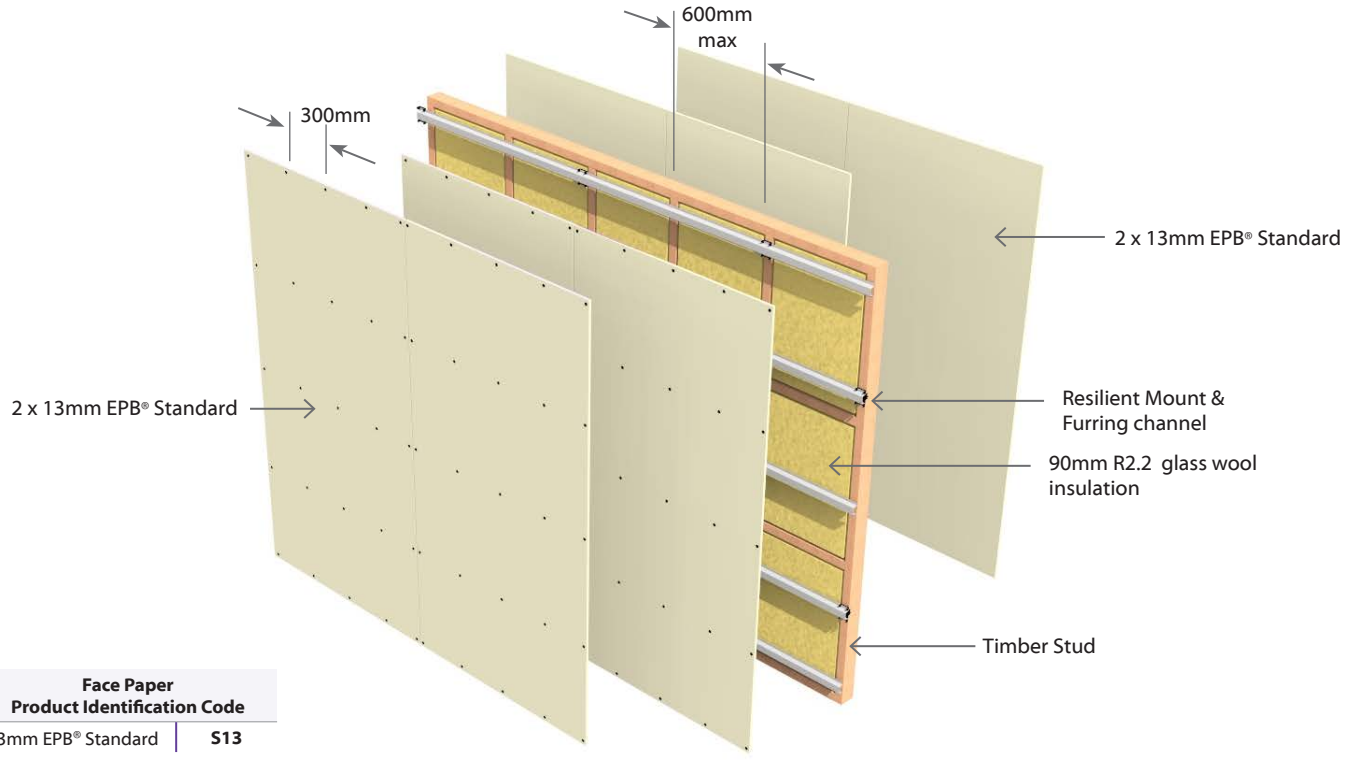

Face Paper Product Identification Code	
13mm EPB® Standard	**S13**

E3TMLA60 Single Timber Frame with Resilient Mount | Load Bearing | Two Way FRR

3 Layers: 1 Layer of Plasterboard on Framing side & 2 Layers of Plasterboard on Mount side | Full Intertenancy Acoustic

System Number	Lining Suffix	FRR	Load Bearing Ability	Noise Control		Lining Requirement
				STC	Rw	
E3TMLA60	**-M39**	60/60/60	LB	58	57	Framing Side: 1 x 13mm EPB BraceSmart®/NoiseSmart® Mount Side: 2 x 13mm EPB BraceSmart®/NoiseSmart®

Framing

Framing to comply with relevant sections and clauses of NZBC B1: Structure and NZBC B2: Durability.

Studs at 600mm centres maximum.

Nogs at 1350mm centre maximum.

Wall Height, Load and Framing Dimension

These are determined by NZS3604 stud tables for load bearing or non-load bearing partitions. Minimum 90 x 45mm frame dimension.

Minimum Partition Width

In order to achieve the STC ratings in the table above the partition width (excluding the board) shall be a minimum of 130mm.

Stud Depth	Mount + Channel	Lining Suffix	Total Plasterboard thickness	Total Partition Width
90mm	40mm	M39	39mm	169mm

Wall Sound Absorber

Install Sound Absorber between studs and nogs of the frame.

Use 90mm thick R2.2 glass wool insulation.

Acoustic Resilient Mount

The Resilient Mount shall be fixed to the studs at 600mm centres vertically and on every alternative stud using 63mm x 8g self tapping screw. When adjusting the clip for depth, 3mm rubber must remain between the underside of the steel spacer head and the furring channel. The Furring channels are clipped horizontally into the Mounts. Joints must be made as close as possible to the clips.

Plasterboard Lining

NB: The installer must look for the Product Identification Code on the face paper to ensure the correct board type is installed. Refer to the Face Paper Product Identification Code table on this page.

Two layer of 13mm EPB BraceSmart®/NoiseSmart® lining fixed vertically on the mount side and One layer of 13mm EPB BraceSmart®/NoiseSmart® fixed vertically to the framing side.

Vertical fixing only permitted. Vertical joints of outer layer should be offset by 600mm from those of the inner layer. Use full height sheets where possible. All sheet joints on the framing side must be fixed over solid timber framing. Sheet end butt joints must be formed over nogs or furring channels and offset the outer layer joints from the inner layer. Sheets shall be touch fitted.

Fixing of Linings

Fasteners

System Number	Furring Channel Side		Framing Side
	1st Layer	2nd Layer	Single Layer
	Self-Tapping Drywall Screws		High Thread Drywall Screws
E3TMLA60-M39	13mm	13mm	13mm
	25 x 6g	41 x 6g	41 x 6g

Fastener Centres

Framing Side: Fix at 300mm centres at sheet perimeter and up each stud.

Resilient Mount Side: Fix 300mm centres along each furring channel.

Place fasteners minimum 12mm from sheet edges and sheet ends.

Place fasteners at 200mm centres where sheet end butt joints occur.

Avoid outer layer screws from hitting inner layer screws.

Acoustic Sealant

A bead of acoustic sealant is required around the perimeter of the framing or the inner layer. The single or outer layer is then bedded onto the bead. The perimeter junctions of the wall must be airtight.

Jointing

Inner Layer: Unstopped.

Outer or Single Layer: All fastener heads stopped and all sheet joints reinforced and stopped. Wall to ceiling junctions are to be reinforced with paper tape and square stopped or finished with Cornice. All in accordance with EPB® Plasterboard Installation Guide.

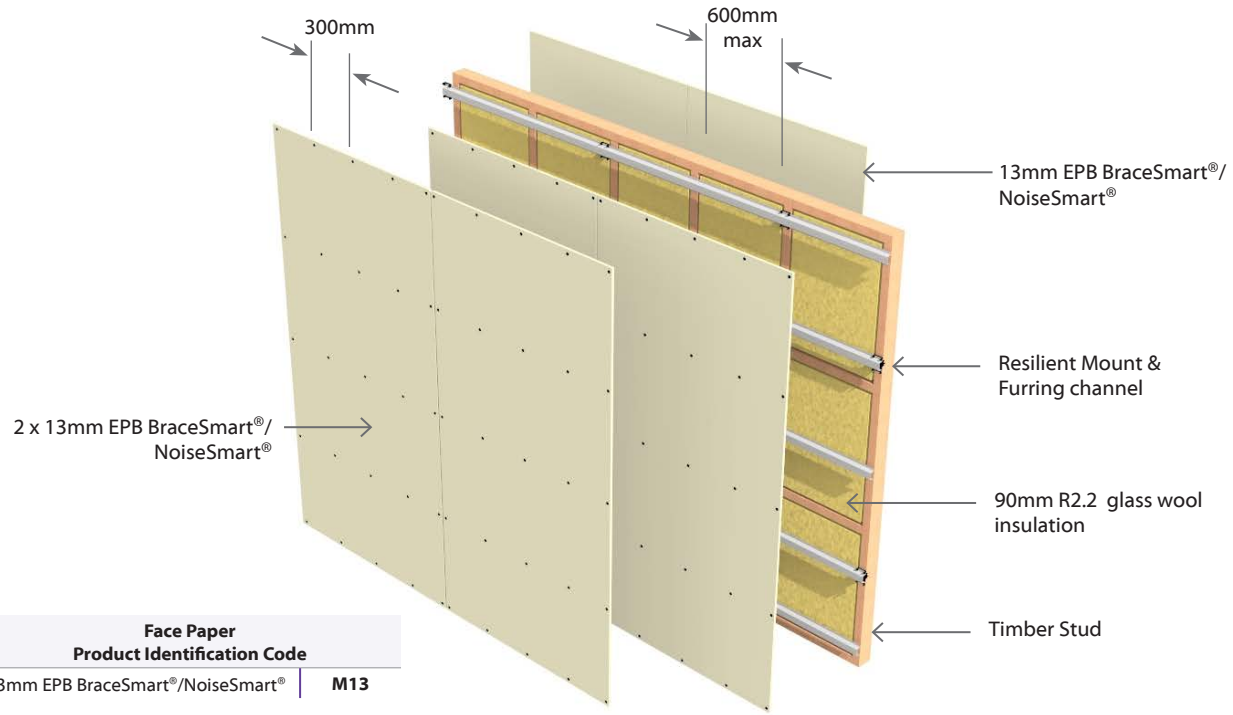

Face Paper Product Identification Code	
13mm EPB BraceSmart®/NoiseSmart®	**M13**

E4TMLA60 Single Timber Frame with Resilient Mount | Load Bearing | Two Way FRR

4 Layers: 2 Layers of Plasterboard to each side of frame | Full Intertenancy Acoustic

System Number	Lining Suffix	FRR	Load Bearing Ability	Noise Control		Lining Requirement
				STC	Rw	
E4TMLA60	**-M40**	60/60/60	LB	62	61	Framing Side: 2 x 10mm EPB BraceSmart®/NoiseSmart® Mount Side: 2 x 10mm EPB BraceSmart®/NoiseSmart®

Framing

Framing to comply with relevant sections and clauses of NZBC B1: Structure and NZBC B2: Durability.

Studs at 600mm centres maximum.

Nogs at 1350mm centre maximum.

Wall Height, Load and Framing Dimension

These are determined by NZS3604 stud tables for load bearing or non-load bearing partitions. Minimum frame dimension 90 x 45mm.

Minimum Partition Width

In order to achieve the STC ratings in the table above the partition width (excluding the board) shall be a minimum of 130mm.

Stud Depth	Mount + Channel	Lining Suffix	Total Plasterboard thickness	Total Partition Width
90mm	40mm	**M40**	40mm	170mm

Wall Sound Absorber

Install Sound Absorber between studs and nogs of the frame.

Use 90mm thick R2.2 glass wool insulation.

Acoustic Resilient Mount

The Resilient Mount shall be fixed to the studs at 600mm centres vertically and on every alternative stud using 63mm x 8g self tapping screw. When adjusting the clip for depth, 3mm rubber must remain between the underside of the steel spacer head and the furring channel. The Furring channels are clipped horizontally into the Mounts. Joints must be made as close as possible to the clips.

Plasterboard Lining

NB: The installer must look for the Product Identification Code on the face paper to ensure the correct board type is installed. Refer to the Face Paper Product Identification Code table on this page.

Two layers of 10mm EPB BraceSmart®/NoiseSmart® lining fixed vertically on each side of the timber framing.

Vertical fixing only permitted. Vertical joints of outer layer should be offset by 600mm from those of the inner layer. Use full height sheets where possible. All sheet joints on the framing side must be fixed over solid timber framing. Sheet end butt joints must be formed over nogs or furring channels and offset the outer layer joints from the inner layer. Sheets shall be touch fitted.

Fixing of Linings

Fasteners

System Number	Furring Channel Side		Framing Side	
	1st Layer	2nd Layer	1st Layer	2nd Layer
	Self-Tapping Drywall Screws		High Thread Drywall Screws	
E4TMLA60-M40	10mm	10mm	10mm	10mm
	25 x 6g	32 x 6g	41 x 6g	51 x 7g

Fastener Centres

Framing Side: Fix at 300mm centres at sheet perimeter and up each stud.

Resilient Mount Side: Fix 300mm centres along each furring channel.

Place fasteners minimum 12mm from sheet edges and sheet ends.

Place fasteners at 200mm centres where sheet end butt joints occur.

Avoid outer layer screws from hitting inner layer screws.

Acoustic Sealant

A bead of acoustical sealant is required around the perimeter of the inner layer and the outer layer is bedded onto the bead. The perimeter junctions of the wall must be airtight.

Jointing

Inner Layer: Unstopped.

Outer Layer: All fastener heads stopped and all sheet joints reinforced with paper jointing tape and stopped. Wall to ceiling junctions are to be reinforced with paper tape and square stopped or finished with Cornice. All in accordance with EPB® Plasterboard Installation Guide.

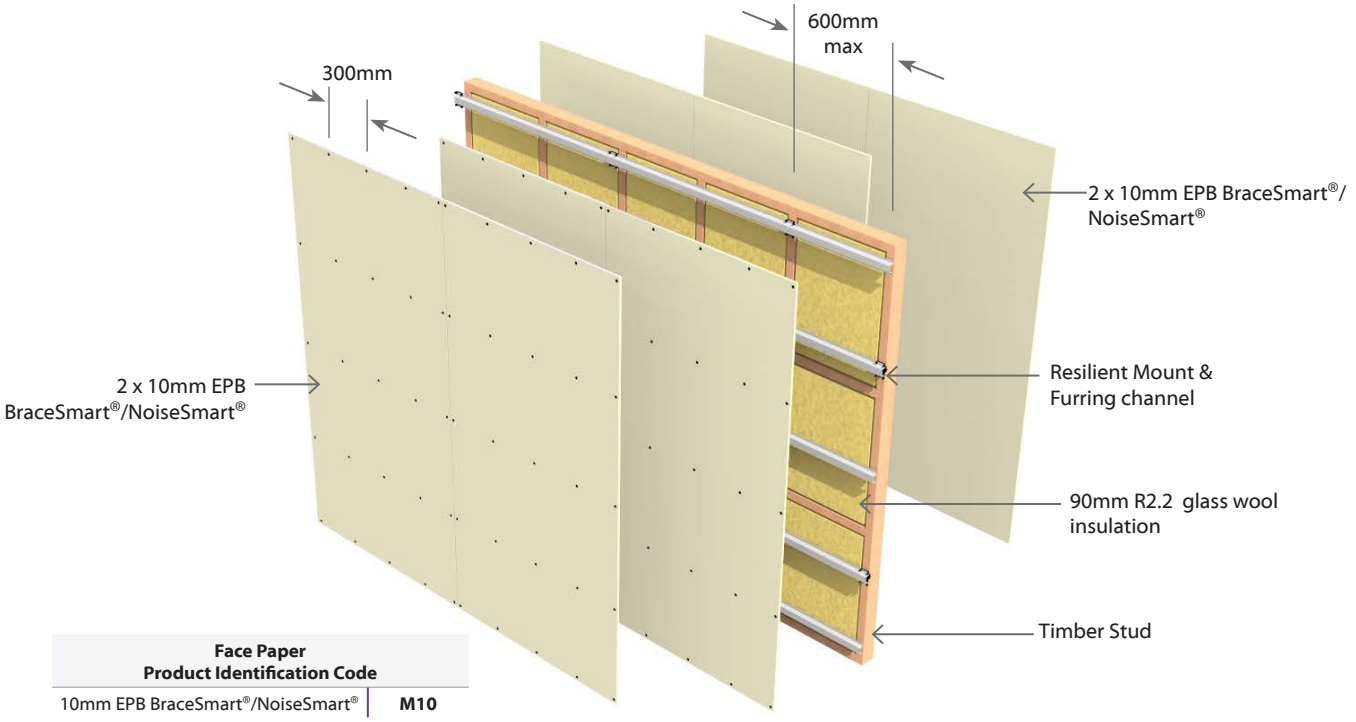

Face Paper Product Identification Code	
10mm EPB BraceSmart®/NoiseSmart®	**M10**

E4TMLA90 Single Timber Frame with Resilient Mount | Load Bearing | Two Way FRR

4 Layers: 2 Layers of Plasterboard to each side of frame | Full Intertenancy Acoustic

System Number	Lining Suffix	FRR	Load Bearing Ability	Noise Control		Lining Requirement
				STC	Rw	
E4TMLA90	**-M52**	90/90/90	LB	63	62	Framing Side: 2 x 13mm EPB BraceSmart®/NoiseSmart® Mount Side: 2 x 13mm EPB BraceSmart®/NoiseSmart®

Framing

Framing to comply with relevant sections and clauses of NZBC B1: Structure and NZBC B2: Durability.

Studs at 600mm centres maximum.

Nogs at 1350mm centre maximum.

Wall Height, Load and Framing Dimension

These are determined by NZS3604 stud tables for load bearing or non-load bearing partitions. Minimum frame dimension 90 x 45mm.

Minimum Partition Width

In order to achieve the STC ratings in the table above the partition width (excluding the board) shall be a minimum of 130mm.

Stud Depth	Mount + Channel	Lining Suffix	Total Plasterboard thickness	Total Partition Width
90mm	40mm	**M52**	52mm	182mm

Wall Sound Absorber

Install Sound Absorber between studs and nogs of the frame.

Use 90mm thick R2.2 glass wool insulation.

Acoustic Resilient Mount

The Resilient Mount shall be fixed to the studs at 600mm centres vertically and on every alternative stud using 63mm x 8g self tapping screw. When adjusting the clip for depth, 3mm rubber must remain between the underside of the steel spacer head and the furring channel. The Furring channels are clipped horizontally into the Mounts. Joints must be made as close as possible to the clips.

Plasterboard Lining

NB: The installer must look for the Product Identification Code on the face paper to ensure the correct board type is installed. Refer to the Face Paper Product Identification Code table on this page.

Two layers of 13mm EPB BraceSmart®/NoiseSmart® lining fixed vertically on each side of the timber framing.

Vertical fixing only permitted. Vertical joints of outer layer should be offset by 600mm from those of the inner layer. Use full height sheets where possible. All sheet joints on the framing side must be fixed over solid timber framing. Sheet end butt joints must be formed over nogs or furring channels and offset the outer layer joints from the inner layer. Sheets shall be touch fitted.

Fixing of Linings

Fasteners

System Number	Furring Channel Side		Framing Side	
	1st Layer	2nd Layer	1st Layer	2nd Layer
	Self-Tapping Drywall Screws		High Thread Drywall Screws	
E4TMLA90-M52	13mm	13mm	13mm	13mm
	25 x 6g	41 x 6g	41 x 6g	51 x 7g

Fastener Centres

Framing Side: Fix at 300mm centres at sheet perimeter and up each stud.

Resilient Mount Side: Fix 300mm centres along each furring channel.

Place fasteners minimum 12mm from sheet edges and sheet ends.

Place fasteners at 200mm centres where sheet end butt joints occur.

Avoid outer layer screws from hitting inner layer screws.

Acoustic Sealant

A bead of acoustical sealant is required around the perimeter of the inner layer and the outer layer is bedded onto the bead. The perimeter junctions of the wall must be airtight.

Jointing

Inner Layer: Unstopped.

Outer Layer: All fastener heads stopped and all sheet joints reinforced with paper jointing tape and stopped. Wall to ceiling junctions are to be reinforced with paper tape and square stopped or finished with Cornice. All in accordance with EPB® Plasterboard Installation Guide.

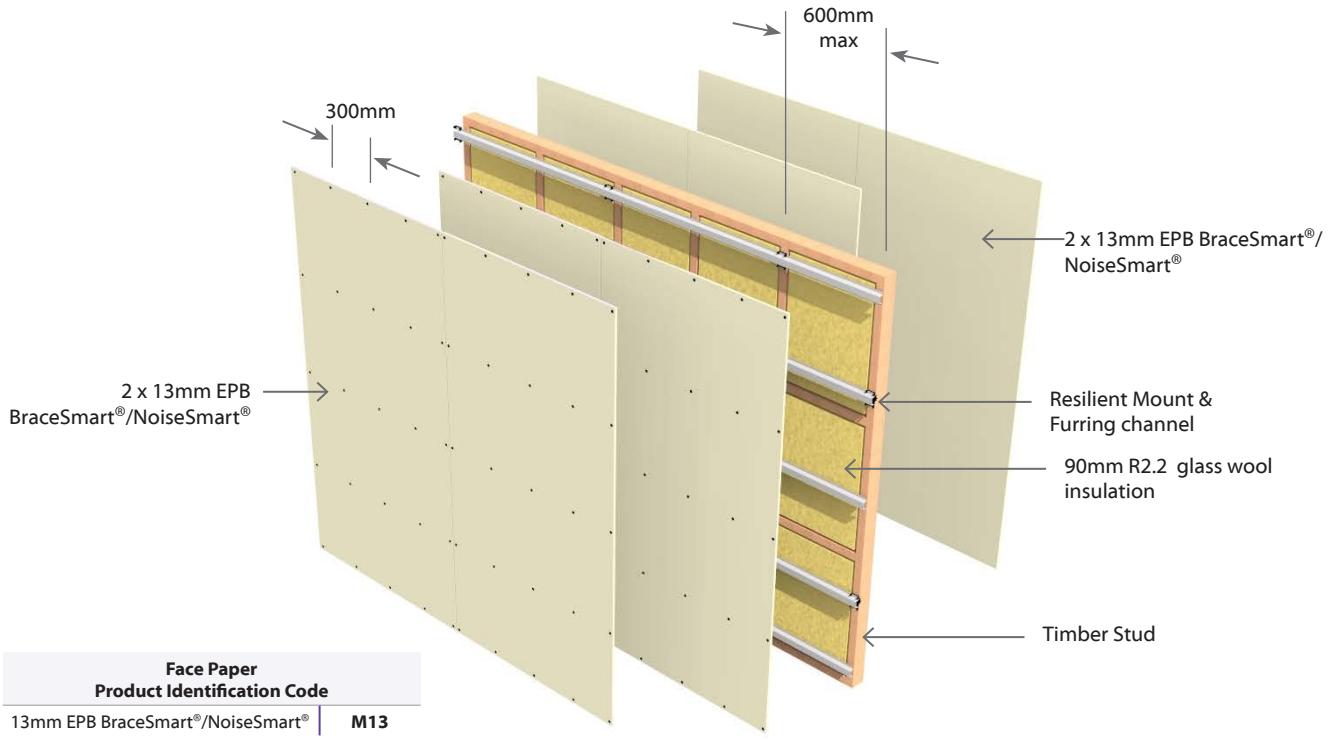

Face Paper Product Identification Code	
13mm EPB BraceSmart®/NoiseSmart®	**M13**

E4TRLA45 Single Timber Frame with Resilient Rail | Load Bearing | Two Way FRR

4 Layers: 2 Layers of Plasterboard to each side of frame | Full Intertenancy Acoustic

System Number	Lining Suffix	FRR	Load Bearing Ability	Noise Control		Lining Requirement
				STC	Rw	
E4TRLA45	**-S52**	45/45/45	LB	55	54	Framing Side: 2 x 13mm EPB® Standard Rail Side: 2 x 13mm EPB® Standard

Framing

Framing to comply with relevant sections and clauses of NZBC B1: Structure and NZBC B2: Durability.

Studs at 600mm centres maximum.

Nogs at 1350mm centre maximum.

Wall Height, Load and Framing Dimension

These are determined by NZS3604 stud tables for load bearing or non-load bearing partitions. Minimum frame dimension 90 x 45mm.

Minimum Partition Width

In order to achieve the STC ratings in the table above the partition width (excluding the board) shall be a minimum of 103mm.

Stud Depth	Rail	Lining Suffix	Total Plasterboard thickness	Total Partition Width
90mm	13mm	**S52**	52mm	155mm

Wall Sound Absorber

Install Sound Absorber between studs and nogs of the frame.

Use 90mm thick R2.2 glass wool insulation.

Acoustic Resilient Rail

The Resilient Rail shall be fixed to the studs at 600mm centres using 32mm x 8g wafer head self-tapping screws through the base flange and into each stud. The base flange to face downwards and resilient edge upwards. Channel may be joined by nesting together with no more than 20mm overlap. Fasten through both channels into stud. Highest resilient channel shall be fixed no more than 75mm from the ceiling line and the lowest channel, 50mm from the floor line.

Plasterboard Lining

NB: The installer must look for the Product Identification Code on the face paper to ensure the correct board type is installed. Refer to the Face Paper Product Identification Code table on this page.

Two layers of 13mm EPB® Standard fixed vertically on each side of the timber framing.

Vertical fixing only permitted. Vertical joints of outer layer should be offset by 600mm from those of the inner layer. Use full height sheets where possible. All sheet joints on the framing side must be fixed over solid timber framing. Sheet end butt joints must be formed over nogs or rails and offset the outer layer joints from the inner layer.

Sheets shall be touch fitted.

Fixing of Linings

Fasteners

System Number	Resilient Rail Side		Framing Side	
	1st Layer	2nd Layer	1st Layer	2nd Layer
	Self-Tapping Drywall Screws		High Thread Drywall Screws	
E4TRLA45-S52	13mm	13mm	13mm	13mm
	25 x 6g	41 x 6g	41 x 6g	51 x 7g

Fastener Centres

Framing Side: Fix at 300mm centres at sheet perimeter and up each stud.

Resilient Rail Side: Fix 300mm centres along each resilient rail.

Place fasteners minimum 12mm from sheet edges and sheet ends.

Place fasteners at 200mm centres where sheet end butt joints occur.

Avoid outer layer screws from hitting inner layer screws.

Lining screws to be fastened to the side of the studs and nogs, to ensure that they don't penetrate or touch the framing.

Acoustic Sealant

A bead of acoustical sealant is required around the perimeter of the inner layer and the outer layer is bedded onto the bead. The perimeter junctions of the wall must be airtight.

Jointing

Inner Layer: Unstopped

Outer Layer: All fastener heads stopped and all sheet joints reinforced and stopped. Wall to ceiling junctions are to be reinforced with paper tape and square stopped or finished with Cornice. All in accordance with EPB® Plasterboard Installation Guide.

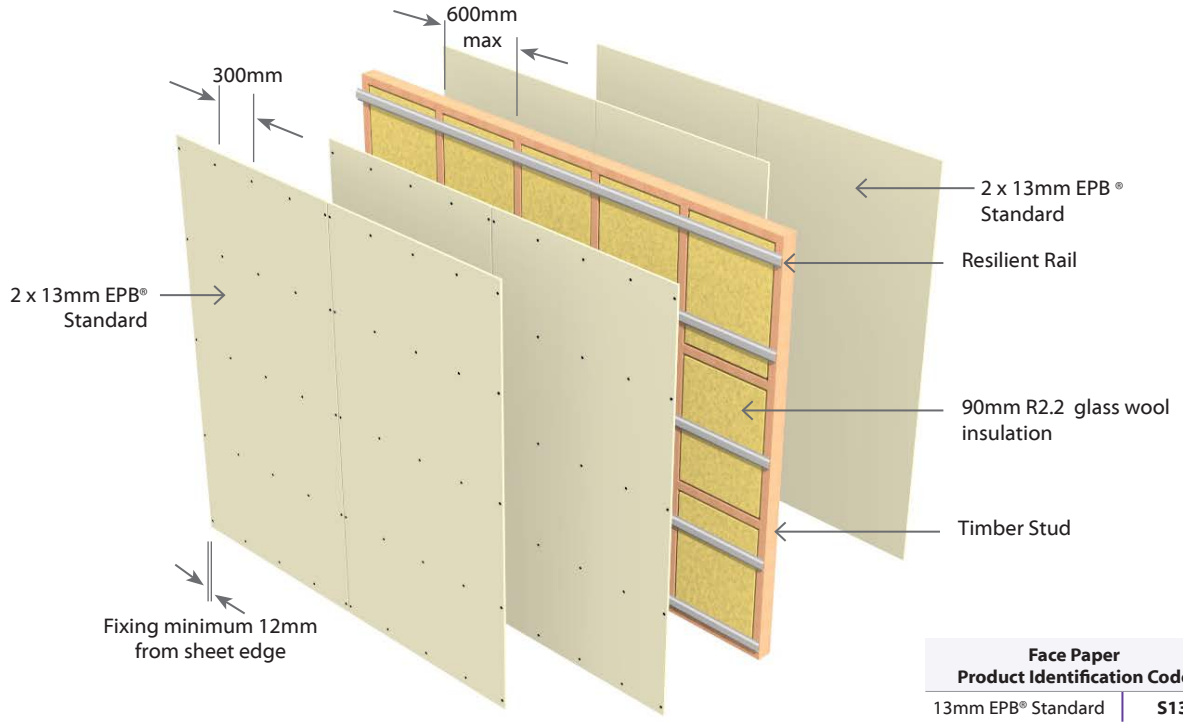

Face Paper Product Identification Code	
13mm EPB® Standard	**S13**

E4TRLA60 Single Timber Frame with Resilient Rail | Load Bearing | Two Way FRR

4 Layers: 2 Layers of Plasterboard to each side of frame | Full Intertenancy Acoustic

System Number	Lining Suffix	FRR	Load Bearing Ability	Noise Control		Lining Requirement
				STC	Rw	
E4TRLA60	**-M40**	60/60/60	LB	56	55	Framing Side: 2 x 10mm EPB BraceSmart®/NoiseSmart® Rail Side: 2 x 10mm EPB BraceSmart®/NoiseSmart®

Framing

Framing to comply with relevant sections and clauses of NZBC B1: Structure and NZBC B2: Durability.

Studs at 600mm centres maximum.

Nogs at 1350mm centre maximum.

Wall Height, Load and Framing Dimension

These are determined by NZS3604 stud tables for load bearing or non-load bearing partitions. Minimum frame dimension 90 x 45mm.

Minimum Partition Width

In order to achieve the STC ratings in the table above the partition width (excluding the board) shall be a minimum of 103mm.

Stud Depth	Rail	Lining Suffix	Total Plasterboard thickness	Total Partition Width
90mm	13mm	**M40**	40mm	143mm

Wall Sound Absorber

Install Sound Absorber between studs and nogs of the frame.

Use 90mm thick R2.2 glass wool insulation.

Acoustic Resilient Rail

The Resilient Rail shall be fixed to the studs at 600mm centres using 32mm x 8g wafer head self-tapping screws through the base flange and into each stud. The base flange to face downwards and resilient edge upwards. Channel may be joined by nesting together with no more than 20mm overlap. Fasten through both channels into stud. Highest resilient channel shall be fixed no more than 75mm from the ceiling line and the lowest channel, 50mm from the floor line.

Plasterboard Lining

NB: The installer must look for the Product Identification Code on the face paper to ensure the correct board type is installed. Refer to the Face Paper Product Identification Code table on this page.

Two layers of 10mm EPB BraceSmart®/NoiseSmart® fixed vertically on each side of the timber framing.

Vertical fixing only permitted. Vertical joints of outer layer should be offset by 600mm from those of the inner layer. Use full height sheets where possible. All sheet joints on the framing side must be fixed over solid timber framing. Sheet end butt joints must be formed over nogs or rails and offset the outer layer joints from the inner layer.

Sheets shall be touch fitted.

Fixing of Linings

Fasteners

System Number	Resilient Rail Side		Framing Side	
	1st Layer	2nd Layer	1st Layer	2nd Layer
	Self-Tapping Drywall Screws		High Thread Drywall Screws	
E4TRLA60-M40	10mm	10mm	10mm	10mm
	25 x 6g	32 x 6g	41 x 6g	51 x 7g

Fastener Centres

Framing Side: Fix at 300mm centres at sheet perimeter and up each stud.

Resilient Rail Side: Fix 300mm centres along each resilient rail.

Place fasteners minimum 12mm from sheet edges and sheet ends.

Place fasteners at 200mm centres where sheet end butt joints occur.

Avoid outer layer screws from hitting inner layer screws.

Lining screws to be fastened to the side of the studs and nogs, to ensure that they don't penetrate or touch the framing.

Acoustic Sealant

A bead of acoustical sealant is required around the perimeter of the inner layer and the outer layer is bedded onto the bead. The perimeter junctions of the wall must be airtight.

Jointing

Inner Layer: Unstopped

Outer Layer: All fastener heads stopped and all sheet joints reinforced and stopped. Wall to ceiling junctions are to be reinforced with paper tape and square stopped or finished with Cornice. All in accordance with EPB® Plasterboard Installation Guide.

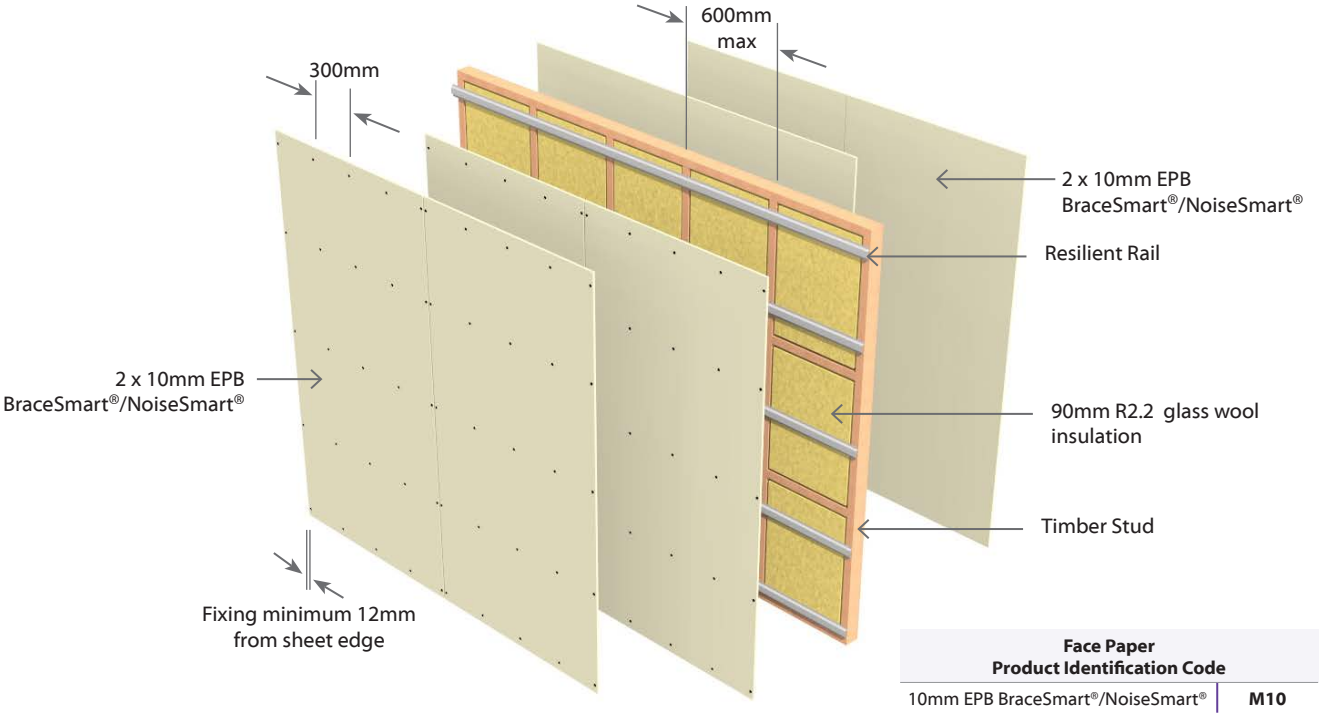

Face Paper Product Identification Code	
10mm EPB BraceSmart®/NoiseSmart®	**M10**

E4TRLA90 Single Timber Frame with Resilient Rail | Load Bearing | Two Way FRR

4 Layers: 2 Layers of Plasterboard to each side of frame | Full Intertenancy Acoustic

System Number	Lining Suffix	FRR	Load Bearing Ability	Noise Control		Lining Requirement
				STC	Rw	
E4TRLA90	-F52	90/90/90	LB	56	55	Framing Side: 2 x 13mm EPB FireSmart® Rail Side: 2 x 13mm EPB FireSmart®
	-M52	90/90/90	LB	57	56	Framing Side: 2 x 13mm EPB BraceSmart®/NoiseSmart® Rail Side: 2 x 13mm EPB BraceSmart®/NoiseSmart®

Framing

Framing to comply with relevant sections and clauses of NZBC B1: Structure and NZBC B2: Durability.

Studs at 600mm centres maximum.

Nogs at 1350mm centre maximum.

Wall Height, Load and Framing Dimension

These are determined by NZS3604 stud tables for load bearing or non-load bearing partitions. Minimum frame dimension 90 x 45mm.

Minimum Partition Width

In order to achieve the STC ratings in the table above the partition width (excluding the board) shall be a minimum of 103mm.

Stud Depth	Rail	Lining Suffix	Total Plasterboard thickness	Total Partition Width
90mm	13mm	M52	52mm	155mm

Wall Sound Absorber

Install Sound Absorber between studs and nogs of the frame.

Use 90mm thick R2.2 glass wool insulation.

Acoustic Resilient Rail

The Resilient Rail shall be fixed to the studs at 600mm centres using 32mm x 8g wafer head self-tapping screws through the base flange and into each stud. The base flange to face downwards and resilient edge upwards. Channel may be joined by nesting together with no more than 20mm overlap. Fasten through both channels into stud. Highest resilient channel shall be fixed no more than 75mm from the ceiling line and the lowest channel, 50mm from the floor line.

Plasterboard Lining

NB: The installer must look for the Product Identification Code on the face paper to ensure the correct board type is installed. Refer to the Face Paper Product Identification Code table on this page.

Two layers of EPB® Plasterboard as per specified system above, fixed vertically on each side of the timber framing.

Vertical fixing only permitted. Vertical joints of outer layer should be offset by 600mm from those of the inner layer. Use full height sheets where possible. All sheet joints on the framing side must be fixed over solid timber framing. Sheet end butt joints must be formed over nogs or rails and offset the outer layer joints from the inner layer.

Sheets shall be touch fitted.

Fixing of Linings

Fasteners (As per Specified System Above)

System Number	Resilient Rail Side		Framing Side	
	1st Layer	2nd Layer	1st Layer	2nd Layer
	Self-Tapping Drywall Screws		High Thread Drywall Screws	
E4TRLA90-F52 E4TRLA90-M52	13mm 25 x 6g	13mm 41 x 6g	13mm 41 x 6g	13mm 51 x 7g

Fastener Centres

Framing Side: Fix at 300mm centres at sheet perimeter and up each stud.

Resilient Rail Side: Fix 300mm centres along each resilient rail.

Place fasteners minimum 12mm from sheet edges and sheet ends.

Place fasteners at 200mm centres where sheet end butt joints occur.

Avoid outer layer screws from hitting inner layer screws.

Lining screws to be fastened to the side of the studs and nogs, to ensure that they don't penetrate or touch the framing.

Acoustic Sealant

A bead of acoustical sealant is required around the perimeter of the inner layer and the outer layer is bedded onto the bead. The perimeter junctions of the wall must be airtight.

Jointing

Inner Layer: Unstopped

Outer Layer: All fastener heads stopped and all sheet joints reinforced and stopped. Wall to ceiling junctions are to be reinforced with paper tape and square stopped or finished with Cornice. All in accordance with EPB® Plasterboard Installation Guide.

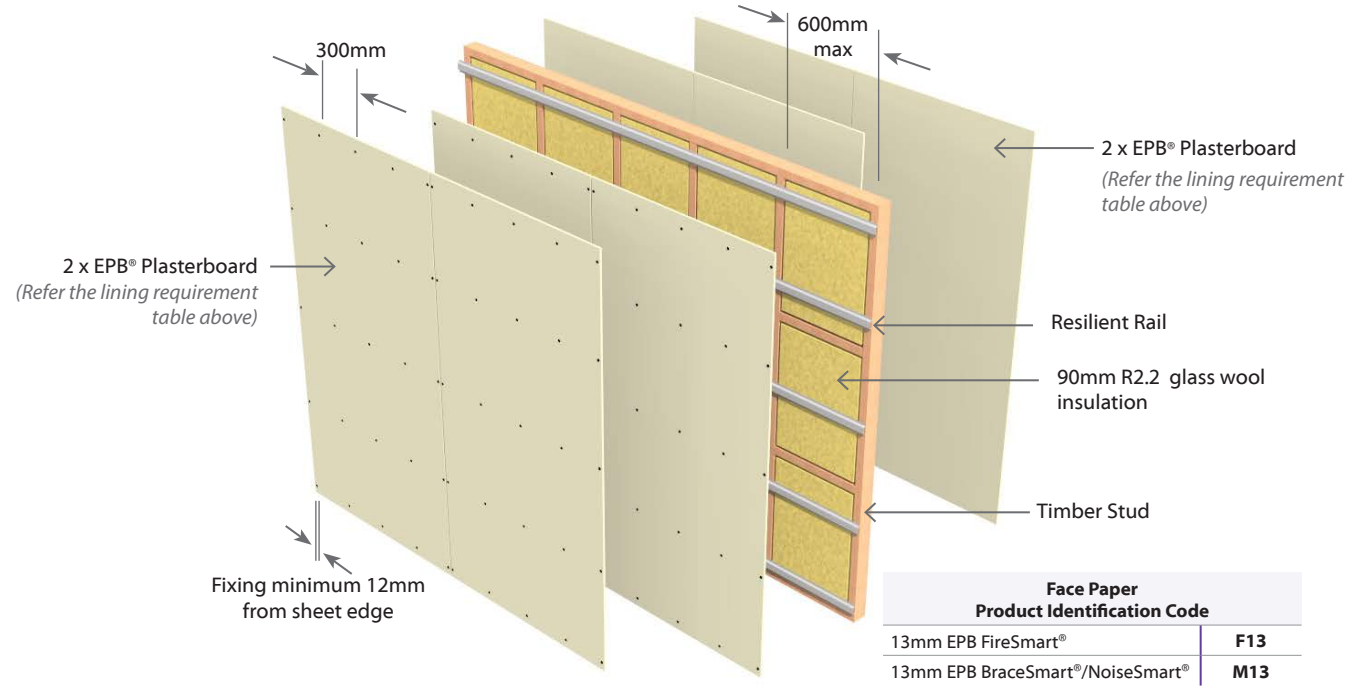

Face Paper Product Identification Code	
13mm EPB FireSmart®	F13
13mm EPB BraceSmart®/NoiseSmart®	M13

Steel Frame Walls

E3SDA30 Double Steel Frame | Non Load Bearing | Two Way FRR

3 Layers: 1 Layer of Plasterboard on one side of frame &
2 Layers of Plasterboard on other side of frame

Full Intertenancy **A**coustic

System Number	Lining Suffix	FRR	Load Bearing Ability	Noise Control*		Lining Requirement
				STC	Rw	
E3SDA30	**-S39**	-/30/30	NLB	55	54	1 x 13mm EPB® Standard one side 2 x 13mm EPB® Standard other side
	-M30	-/30/30	NLB	56	55	1 x 10mm EPB BraceSmart®/NoiseSmart® one side 2 x 10mm EPB BraceSmart®/NoiseSmart® other side

*Acoustic Performance improves with increase of Partition Width. See 'Minimum Partition Width' Table below.

Framing

Double Frame - Steel studs to be of minimum dimension 64mm x 34mm x 0.55 BMT with a 6mm return.
Tracks to be minimum dimension 64mm x 30mm x 0.55 BMT.
Top & bottom tracks are fixed to the floor and ceiling in true alignment.
Studs are placed at 600mm centres maximum. Studs aligned.
Place studs to allow the nominated expansion gap (minimum 15mm) at the top of frame. The studs are not directly fixed to the tracks. The studs are held in place by the grip of the track runners.

Wall Heights

Recommended maximum height is 2.7m. Higher walls may be subject to specific engineering design or consult the framing manufacturer.

Minimum Partition Width

Space between Frames shall be a minimum of 25mm.

In order to achieve the STC ratings in the table above the partition width (excluding the board) shall be a minimum of 153mm. Increasing the partition width would increase STC performance as per the table below.

Stud Depth	Space Between Frames	Partition Width (Excludes Board)	STC Rating
64mm x 2	25mm Min	153mm	+0
64mm x 2	77mm Min	205mm	+2

Wall Sound Absorber

Install Sound Absorber between studs on one side of the double frame. Use 75mm thick R1.8 glass wool blanket.

Plasterboard Lining

NB: The installer must look for the Product Identification Code on the face paper to ensure the correct board type is installed. Refer to the Face Paper Product Identification Code table on this page.

One layer of EPB® Plasterboard to One side of the double steel framing and Two layers to the Other Side as per specified system above.

Vertical fixing only permitted. Use full height or full length sheets where possible. Inner layer joints on opposite side of frame should be offset. All sheet joints must be fixed over steel framing. Vertical Joints of the outer layer should be offset 600mm from those of the inner layer. Sheet end butt joints must be formed over nogs and offset the outer layer joints from the inner layer. The inner layers are fixed hard to the floor. Sheets shall be touch fitted.

Fixing of Linings

Fasteners (As per Specified System Above)

System Number	Side One		Side Two
	1st Layer	2nd Layer	Single Layer
	Self-Tapping Drywall Screws		
E3SDA30-M30	10mm	10mm	10mm
	25 x 6g	41 x 6g	25 x 6g
E3SDA30-S39	13mm	13mm	13mm
	25 x 6g	41 x 6g	25 x 6g

Fastener Centres

Inner Layer: Fix at 300mm centres up each stud with no fixings to top and bottom channel.

Outer or Single Layer: Fix at 300mm centres up each stud with no fixing to top and bottom channel sections.

Place fasteners minimum 12mm from sheet edge and 50mm from sheet ends.

Place fasteners at 200mm centres where sheet end butt joints occur.

Avoid outer layer screws from hitting inner layer screws.

Acoustic Sealant

A bead of acoustic sealant is required around the perimeter of the framing or the inner layer. The single or outer layer is then bedded onto the bead. The perimeter junctions of the wall must be airtight.

Jointing

Inner Layer: Unstopped.

Outer or Single Layer: All fastener heads stopped and all sheet joints reinforced and stopped. Wall to ceiling junctions are to be reinforced with paper tape and square stopped or finished with Cornice. All in accordance with EPB® Plasterboard Installation Guide.

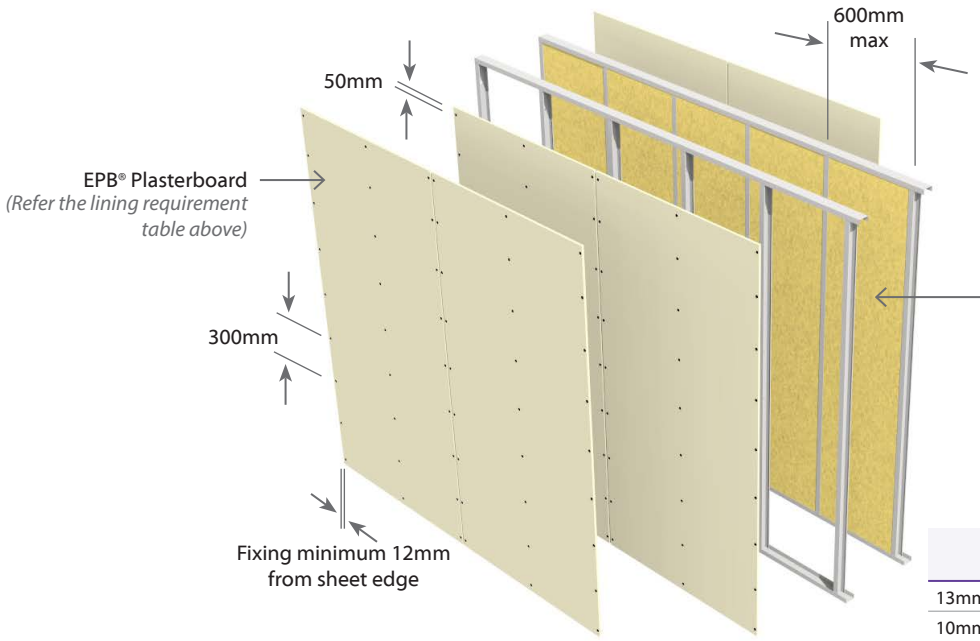

Face Paper Product Identification Code	
13mm EPB® Standard	**S13**
10mm EPB BraceSmart®/NoiseSmart®	**M10**

E4SDA45 Double Steel Frame | Non Load Bearing | Two Way FRR

4 Layers: 2 Layers of Plasterboard to each side of frame | Full Intertenancy **A**coustic

System Number	Lining Suffix	FRR	Load Bearing Ability	Noise Control*		Lining Requirement
				STC	Rw	
E4SDA45	**-F40**	-/45/45	NLB	58	57	2 x 10mm EPB FireSmart® each side

*Acoustic Performance improves with increase of Partition Width. See 'Minimum Partition Width' Table below.

Framing

Double Frame - Steel studs to be of minimum dimension 64mm x 34mm x 0.55 BMT with a 6mm return.
Tracks to be minimum dimension 64mm x 30mm x 0.55 BMT.
Top & bottom tracks are fixed to the floor and ceiling in true alignment.
Studs are placed at 600mm centres maximum. Studs aligned.
Place studs to allow the nominated expansion gap (minimum 15mm) at the top of frame. The studs are not directly fixed to the tracks. The studs are held in place by the grip of the track runners.

Wall Heights

Recommended maximum height is 2.7m. Higher walls may be subject to specific engineering design or consult the framing manufacturer.

Minimum Partition Width

Space between Frames shall be a minimum of 25mm.

In order to achieve the STC ratings in the table above the partition width (excluding the board) shall be a minimum of 153mm. Increasing the partition width would increase STC performance as per the table below.

Stud Depth	Space Between Frames	Partition Width (Excludes Board)	STC Rating
64mm x 2	25mm Min	153mm	+0
64mm x 2	77mm Min	205mm	+2

Wall Sound Absorber

Install Sound Absorber between studs on one side of the double frame. Use 75mm thick R1.8 glass wool blanket.

Plasterboard Lining

NB: The installer must look for the Product Identification Code on the face paper to ensure the correct board type is installed. Refer to the Face Paper Product Identification Code table on this page.

Two layers of 10mm EPB FireSmart® fixed to each side of the double steel framing.

Vertical fixing only permitted. Use full height or full length sheets where possible. Inner layer joints on opposite side of frame should be offset. All sheet joints must be fixed over steel framing. Vertical Joints of the outer layer should be offset 600mm from those of the inner layer. Sheet end butt joints must be formed over nogs and offset the outer layer joints from the inner layer. The inner layers are fixed hard to the floor. Sheets shall be touch fitted.

Fixing of Linings

Fasteners

System Number	Side One		Side Two	
	1st Layer	2nd Layer	1st Layer	2nd Layer
	Self-Tapping Drywall Screws			
E4SDA45-F40	10mm	10mm	10mm	10mm
	25 x 6g	41 x 6g	25 x 6g	41 x 6g

Fastener Centres

Inner Layer: Fix at 300mm centres up each stud with no fixings to top and bottom channel.

Outer Layer: Fix at 300mm centres up each stud with no fixing to top and bottom channel sections.

Place fasteners no closer than 12mm to sheet edge and 50mm from sheet ends.

Place fasteners at 200mm centres where sheet end butt joints occur.

Avoid outer layer screws from hitting inner layer screws.

Acoustic Sealant

A bead of acoustical sealant is required around the perimeter of the inner layer and the outer layer is bedded onto the bead. The perimeter junctions of the wall must be airtight.

Jointing

Inner Layer: Unstopped.

Outer Layer: All fastener heads stopped and all sheet joints reinforced and stopped. Wall to ceiling junctions are to be reinforced with paper tape and square stopped or finished with Cornice. All in accordance with EPB® Plasterboard Installation Guide.

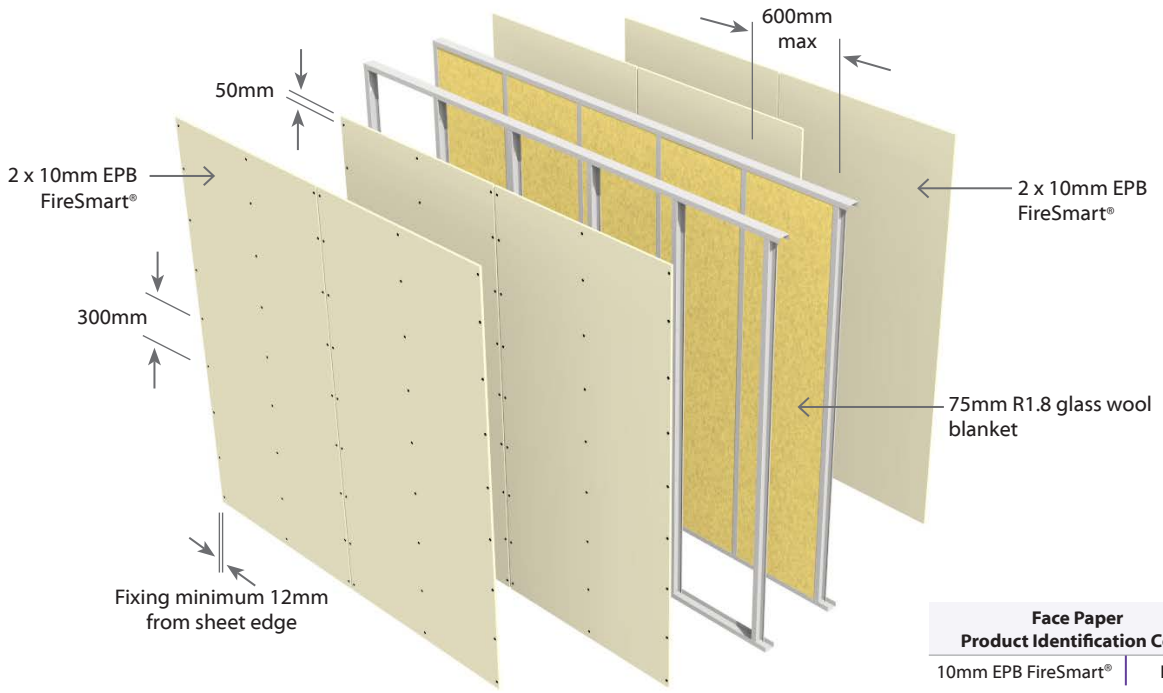

Face Paper Product Identification Code	
10mm EPB FireSmart®	**F10**

E2SDA60 Double Steel Frame | Non Load Bearing | Two Way FRR

2 Layers: 1 Layer of Plasterboard to each side of frame | Full Intertenancy Acoustic

System Number	Lining Suffix	FRR	Load Bearing Ability	Noise Control*		Lining Requirement
				STC	Rw	
E2SDA60	**-M26**	-/60/60	NLB	55	54	1 x 13mm EPB BraceSmart®/NoiseSmart® each side

*Acoustic Performance improves with increase of Partition Width. See 'Minimum Partition Width' Table below.

Framing

Double Frame - Steel studs to be of minimum dimension 64mm x 34mm x 0.55 BMT with a 6mm return.
Tracks to be minimum dimension 64mm x 30mm x 0.55 BMT.
Top & bottom tracks are fixed to the floor and ceiling in true alignment.
Studs are placed at 600mm centres maximum. Studs aligned.
Place studs to allow the nominated expansion gap (minimum 15mm) at the top of frame. The studs are not directly fixed to the tracks. The studs are held in place by the grip of the track runners.

Wall Heights

Recommended maximum height is 2.7m. Higher walls may be subject to specific engineering design or consult the framing manufacturer.

Minimum Partition Width

Space between Frames shall be a minimum of 25mm.

In order to achieve the STC ratings in the table above the partition width (excluding the board) shall be a minimum of 205mm. Increasing the partition width would increase STC performance as per the table below.

Stud Depth	Space Between Frames	Partition Width (Excludes Board)	STC Rating
64mm x 2	25mm Min	153mm	+0
64mm x 2	77mm Min	205mm	+2

Wall Sound Absorber

Install Sound Absorber between studs on both sides of the double frame. Use 75mm thick R1.8 glass wool blanket.

Plasterboard Lining

NB: The installer must look for the Product Identification Code on the face paper to ensure the correct board type is installed. Refer to the Face Paper Product Identification Code table on this page.

One layer of 13mm EPB BraceSmart®/NoiseSmart® fixed to each side of the double steel framing.

Vertical fixing only permitted. Use full height or full length sheets where possible. Sheet edge and butt joints on opposite side of frame should be offset. All sheet joints must be fixed over steel framing. Sheet end butt joints must be formed over nogs. Sheets are fixed hard to the floor. Sheets shall be touch fitted.

Fixing of Linings

Fasteners

System Number	Side One	Side Two
	Single Layer	Single Layer
	Self-Tapping Drywall Screws	
E2SDA60-M26	13mm	13mm
	25 x 6g	25 x 6g

Fastener Centres

Fix at 300mm centres up each stud with no fixing to top and bottom channel sections.

Place fasteners no closer than 12mm to the sheet edge and 50mm from sheet ends.

Place fasteners at 200mm centres where sheet end butt joints occur.

Acoustic Sealant

A bead of acoustic sealant is required around the perimeter of the framing and the single layer is bedded onto the bead. The perimeter junctions of the wall must be airtight.

Jointing

All fastener heads stopped and all sheet joints reinforced with paper jointing tape and stopped. Wall to ceiling junctions are to be reinforced with paper tape and square stopped or finished with Cornice. All in accordance with EPB® Plasterboard Installation Guide.

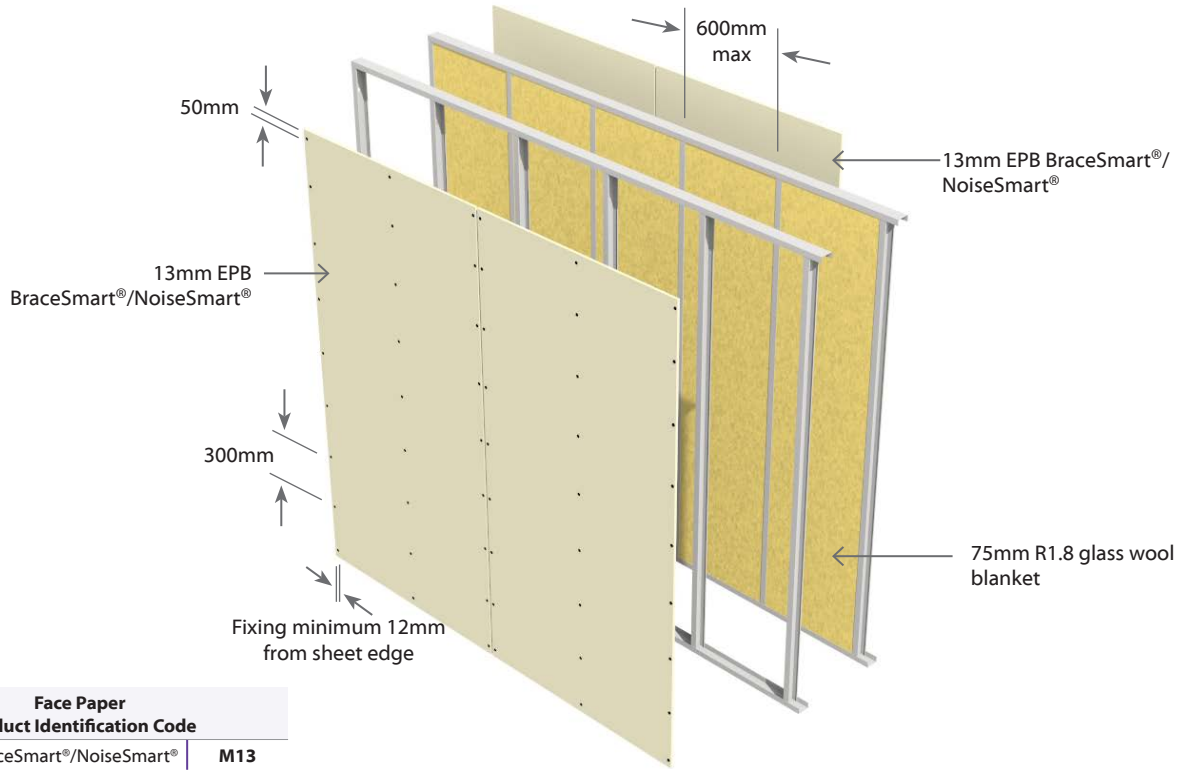

Face Paper Product Identification Code	
13mm EPB BraceSmart®/NoiseSmart®	**M13**

E3SDA60 Double Steel Frame | Non Load Bearing | Two Way FRR

3 Layers: 1 Layer of Plasterboard on one side of frame &
2 Layers of Plasterboard on other side of frame

Full Intertenancy Acoustic

System Number	Lining Suffix	FRR	Load Bearing Ability	Noise Control*		Lining Requirement
				STC	Rw	
E3SDA60	-MS39	-/60/60	NLB	57	56	1 x 13mm EPB BraceSmart®/NoiseSmart® one side 2 x 13mm EPB® Standard other side
	-FM33	-/60/60	NLB	58	57	1 x 13mm EPB FireSmart® one side 2 x 10mm EPB BraceSmart®/NoiseSmart® other side
	-M33	-/60/60	NLB	58	57	1 x 13mm EPB BraceSmart®/NoiseSmart® one side 2 x 10mm EPB BraceSmart®/NoiseSmart® other side
	-M39	-/60/60	NLB	61	60	1 x 13mm EPB BraceSmart®/NoiseSmart® one side 2 x 13mm EPB BraceSmart®/NoiseSmart® other side

*Acoustic Performance improves with increase of Partition Width. See 'Minimum Partition Width' Table below.

Framing

Double Frame - Steel studs to be of minimum dimension 64mm x 34mm x 0.55 BMT with a 6mm return.
Tracks to be minimum dimension 64mm x 30mm x 0.55 BMT.
Top & bottom tracks are fixed to the floor and ceiling in true alignment.
Studs are placed at 600mm centres maximum. Studs aligned.
Place studs to allow the nominated expansion gap (minimum 15mm) at the top of frame. The studs are not directly fixed to the tracks. The studs are held in place by the grip of the track runners.

Wall Heights

Recommended maximum height is 2.7m. Higher walls may be subject to specific engineering design or consult the framing manufacturer.

Minimum Partition Width

Space between Frames shall be a minimum of 25mm.

In order to achieve the STC ratings in the table above the partition width (excluding the board) shall be a minimum of 153mm. Increasing the partition width would increase STC performance as per the table below.

Stud Depth	Space Between Frames	Partition Width (Excludes Board)	STC Rating
64mm x 2	25mm Min	153mm	+0
64mm x 2	77mm Min	205mm	+2

Wall Sound Absorber

Install Sound Absorber between studs on one side of the double frame. Use 75mm thick R1.8 glass wool blanket.

Plasterboard Lining

NB: The installer must look for the Product Identification Code on the face paper to ensure the correct board type is installed. Refer to the Face Paper Product Identification Code table on this page.

One layer of EPB® Plasterboard to One side of the double steel framing and Two layers to the Other Side as per specified system above.

Vertical fixing only permitted. Use full height sheets where possible. Inner layer joints on opposite side of frame should be offset. All sheet joints must be fixed over steel framing. Vertical joints of the outer layer should be offset by 600mm to those of the inner layer. Sheet end butt joints must be formed over nogs and offset the outer layer joints from the inner layer. The inner layers are fixed hard to the floor. Sheets shall be touch fitted.

Fixing of Linings

Fasteners (As per Specified System Above)

System Number	Side One		Side Two
	1st Layer	2nd Layer	Single Layer
	Self-Tapping Drywall Screws		
E3SDA60-MS39 E3SDA60-M39	13mm 25 x 6g	13mm 41 x 6g	13mm 25 x 6g
E3SDA60-FM33 E3SDA60-M33	10mm 25 x 6g	10mm 41 x 6g	13mm 25 x 6g

Fastener Centres

Inner Layer: Fix at 300mm centres up each stud with no fixings to top and bottom channel.

Outer or Single Layer: Fix at 300mm centres up each stud with no fixing to top and bottom channel sections.

Place fasteners minimum 12mm from sheet edge and 50mm from sheet ends. Place fasteners at 200mm centres where sheet end butt joints occur. Avoid outer layer screws from hitting inner layer screws.

Acoustic Sealant

A bead of acoustic sealant is required around the perimeter of the framing or the inner layer. The single or outer layer is then bedded onto the bead. The perimeter junctions of the wall must be airtight.

Jointing

Inner Layer: Unstopped.

Outer or Single Layer: All fastener heads stopped and all sheet joints reinforced and stopped. Wall to ceiling junctions are to be reinforced with paper tape and square stopped or finished with Cornice. All in accordance with EPB® Plasterboard Installation Guide.

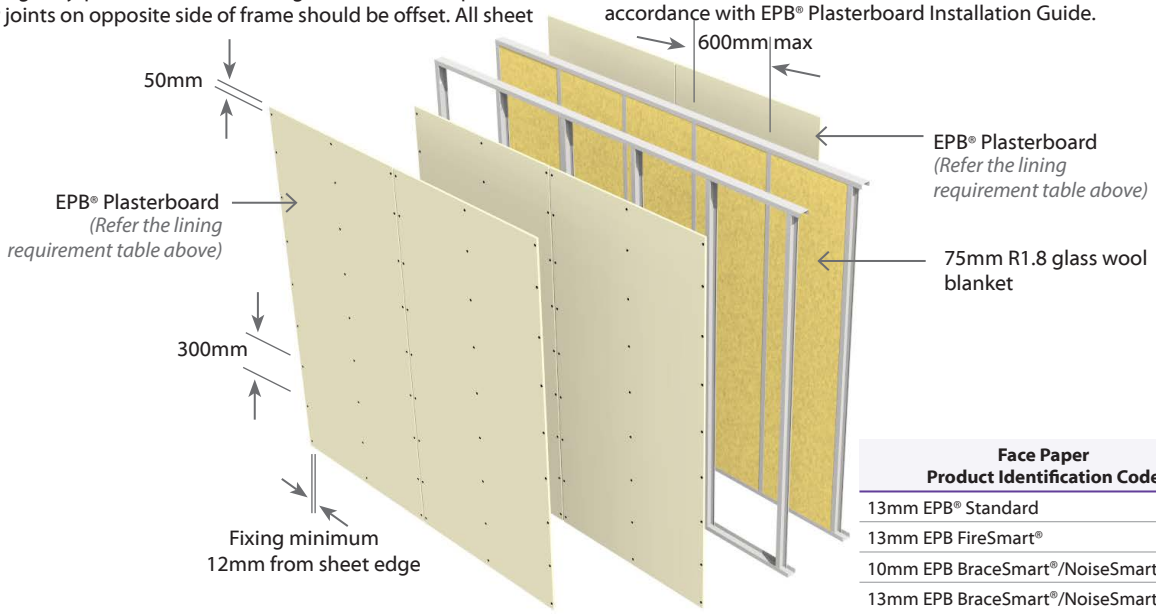

Face Paper Product Identification Code	
13mm EPB® Standard	S13
13mm EPB FireSmart®	F13
10mm EPB BraceSmart®/NoiseSmart®	M10
13mm EPB BraceSmart®/NoiseSmart®	M13

E4SDA60 Double Steel Frame | Non Load Bearing | Two Way FRR

4 Layers: 2 Layers of Plasterboard to each side of frame | Full Intertenancy **A**coustic

System Number	Lining Suffix	FRR	Load Bearing Ability	Noise Control*		Lining Requirement
				STC	Rw	
E4SDA60	-S52	-/60/60	NLB	61	60	2 x 13mm EPB® Standard each side
	-M40	-/60/60	NLB	61	60	2 x 10mm EPB BraceSmart®/NoiseSmart® each side

*Acoustic Performance improves with increase of Partition Width. See 'Minimum Partition Width' Table below.

Framing

Double Frame - Steel studs to be of minimum dimension 64mm x 34mm x 0.55 BMT with a 6mm return.
Tracks to be minimum dimension 64mm x 30mm x 0.55 BMT.
Top & bottom tracks are fixed to the floor and ceiling in true alignment.
Studs are placed at 600mm centres maximum. Studs aligned.
Place studs to allow the nominated expansion gap (minimum 15mm) at the top of frame. The studs are not directly fixed to the tracks. The studs are held in place by the grip of the track runners.

Wall Heights

Recommended maximum height is 2.7m. Higher walls may be subject to specific engineering design or consult the framing manufacturer.

Minimum Partition Width

Space between Frames shall be a minimum of 25mm

In order to achieve the STC ratings in the table above the partition width (excluding the board) shall be a minimum of 153mm. Increasing the partition width would increase STC performance as per the table below.

Stud Depth	Space Between Frames	Partition Width (Excludes Board)	STC Rating
64mm	25mm Min	153mm	+0
64mm	77mm Min	205mm	+2

Wall Sound Absorber

Install Sound Absorber between studs on one side of the double frame. Use 75mm thick R1.8 glass wool blanket.

Plasterboard Lining

NB: The installer must look for the Product Identification Code on the face paper to ensure the correct board type is installed. Refer to the Face Paper Product Identification Code table on this page.

Two layers of EPB® Plasterboard to One side of the double steel framing and Two layers to the Other Side as per specified system above.

Vertical fixing only permitted. Use full height sheets where possible. Inner layer joints on opposite side of frame should be offset. All sheet joints must be fixed over steel framing. Vertical joints of the outer layer should be offset by 600mm to those of the inner layer. Sheet end butt joints must be formed over nogs and offset the outer layer joints from the inner layer. The inner layers are fixed hard to the floor.

Sheet shall be touch fitted.

Fixing of Linings

Fasteners (As per Specified System Above)

System Number	Side One		Side Two	
	1st Layer	2nd Layer	1st Layer	2nd Layer
	Self-Tapping Drywall Screws			
E4SDA60-S52	13mm	13mm	13mm	13mm
	25 x 6g	41 x 6g	25 x 6g	41 x 6g
E4SDA60-M40	10mm	10mm	10mm	10mm
	25 x 6g	41 x 6g	25 x 6g	41 x 6g

Fastener Centres

Inner Layer: Fix at 300mm centres up each stud with no fixings to top and bottom channel.

Outer Layer: Fix at 300mm centres up each stud with no fixing to top and bottom channel sections.

Place fasteners no closer than 12mm to sheet edge and 50mm from sheet ends.

Place fasteners at 200mm centres where sheet end butt joints occur.

Avoid outer layer screws from hitting inner layer screws.

Acoustic Sealant

A bead of acoustical sealant is required around the perimeter of the inner layer and the outer layer is bedded onto the bead. The perimeter junctions of the wall must be airtight.

Jointing

Inner Layer: Unstopped.

Outer Layer: All fastener heads stopped and all sheet joints reinforced and stopped. Wall to ceiling junctions are to be reinforced with paper tape and square stopped or finished with Cornice. All in accordance with EPB® Plasterboard Installation Guide.

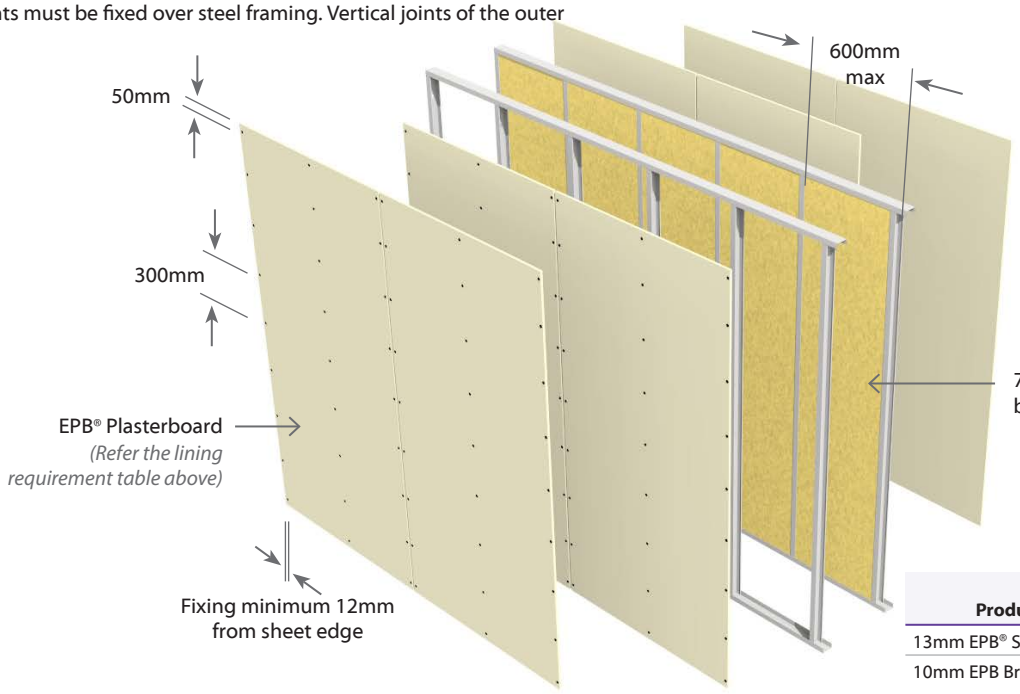

Face Paper Product Identification Code	
13mm EPB® Standard	S13
10mm EPB BraceSmart®/NoiseSmart®	M10

E2SDA75 Double Steel Frame | Non Load Bearing | Two Way FRR

2 Layers: 1 Layer of Plasterboard to each side of frame | Full Intertenancy **A**coustic

System Number	Lining Suffix	FRR	Load Bearing Ability	Noise Control*		Lining Requirement
				STC	Rw	
E2SDA75	**-F32**	-/75/75	NLB	56	55	1 x 16mm EPB FireSmart® each side

*Acoustic Performance improves with increase of Partition Width. See 'Minimum Partition Width' Table below.

Framing

Double Frame - Steel studs to be of minimum dimension 64mm x 34mm x 0.55 BMT with a 6mm return.
Tracks to be minimum dimension 64mm x 30mm x 0.55 BMT.
Top & bottom tracks are fixed to the floor and ceiling in true alignment.
Studs are placed at 600mm centres maximum. Studs aligned.
Place studs to allow the nominated expansion gap (minimum 15mm) at the top of frame. The studs are not directly fixed to the tracks. The studs are held in place by the grip of the track runners.

Wall Heights

Recommended maximum height is 2.7m. Higher walls may be subject to specific engineering design or consult the framing manufacturer.

Minimum Partition Width

Space between Frames shall be a minimum of 25mm

In order to achieve the STC ratings in the table above the partition width (excluding the board) shall be a minimum of 205mm. Increasing the partition width would increase STC performance as per the table below.

Stud Depth	Space Between Frames	Partition Width (Excludes Board)	STC Rating
64mm x 2	25mm Min	153mm	+0
64mm x 2	77mm Min	205mm	+2

Wall Sound Absorber

Install Sound Absorber between studs on both sides of the double frame. Use 75mm thick R1.8 glass wool blanket.

Plasterboard Lining

NB: The installer must look for the Product Identification Code on the face paper to ensure the correct board type is installed. Refer to the Face Paper Product Identification Code table on this page.

One layer of 16mm EPB FireSmart® lining fixed to each side of the double steel framing.

Vertical fixing only permitted. Use full height sheets where possible. Sheet edges and butt joints on opposite side of frame should be offset.

All sheet joints must be fixed over steel framing. Sheet end butt joints must be formed over nogs. Sheets are fixed hard to the floor. Sheets shall be touch fitted.

Fixing of Linings

Fasteners

System Number	Side One	Side Two
	Single Layer	Single Layer
	Self-Tapping Drywall Screws	
E2SDA75-F32	16mm	16mm
	32 x 6g	32 x 6g

Fastener Centres

Fix at 150mm centres up sheet edges and 300mm centres up each intermediate stud with no fixing to top and bottom channel sections.

Place fasteners no closer than 12mm to the sheet edge and 50mm from sheet ends.

Place fasteners at 200mm centres where sheet end butt joints occur.

Acoustic Sealant

A bead of acoustic sealant is required around the perimeter of the framing and the single layer is bedded onto the bead. The perimeter junctions of the wall must be airtight.

Jointing

All fastener heads stopped and all sheet joints reinforced with paper jointing tape and stopped. Wall to ceiling junctions are to be reinforced with paper tape and square stopped or finished with Cornice. All in accordance with EPB® Plasterboard Installation Guide.

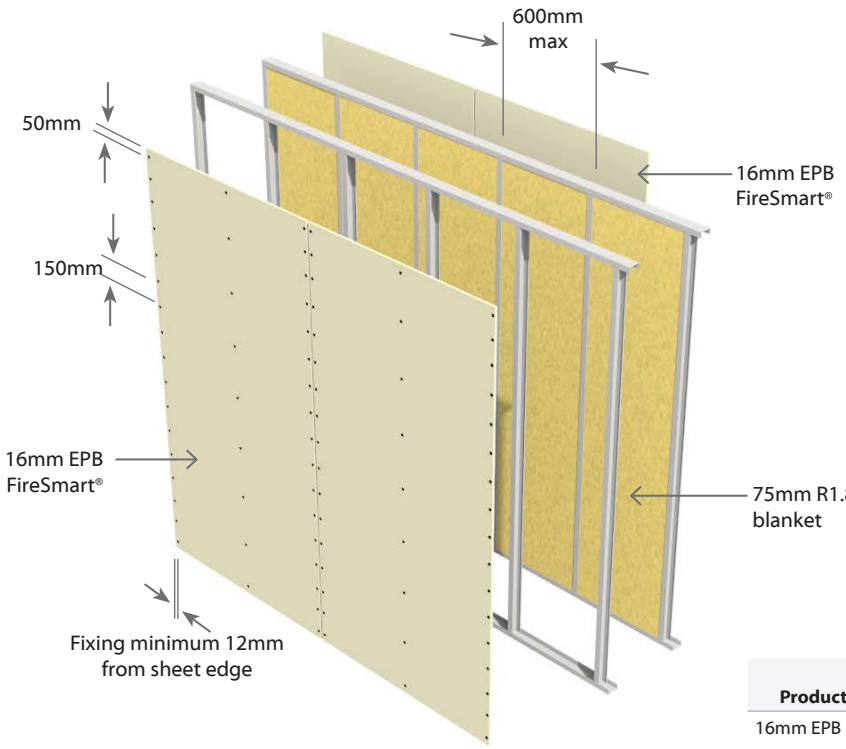

Face Paper Product Identification Code	
16mm EPB FireSmart®	**F16**

E4SDA75 Double Steel Frame | Non Load Bearing | Two Way FRR

4 Layers: 2 Layers of Plasterboard to each side of frame | Full Intertenancy **A**coustic

System Number	Lining Suffix	FRR	Load Bearing Ability	Noise Control*		Lining Requirement
				STC	Rw	
E4SDA75	**-MS52**	-/75/75	NLB	63	62	1 x 13mm EPB® Standard & 1x13mm EPB BraceSmart®/NoiseSmart® each side

*Acoustic Performance improves with increase of Partition Width. See 'Minimum Partition Width' Table below.

Framing

Double Frame - Steel studs to be of minimum dimension 64mm x 34mm x 0.55 BMT with a 6mm return.
Tracks to be minimum dimension 64mm x 30mm x 0.55 BMT.
Top & bottom tracks are fixed to the floor and ceiling in true alignment.
Studs are placed at 600mm centres maximum. Studs aligned.
Place studs to allow the nominated expansion gap (minimum 15mm) at the top of frame. The studs are not directly fixed to the tracks. The studs are held in place by the grip of the track runners.

Wall Heights

Recommended maximum height is 2.7m. Higher walls may be subject to specific engineering design or consult the framing manufacturer.

Minimum Partition Width

Space between Frames shall be a minimum of 25mm.

In order to achieve the STC ratings in the table above the partition width (excluding the board) shall be a minimum of 153mm. Increasing the partition width would increase STC performance as per the table below.

Stud Depth	Space Between Frames	Partition Width (Excludes Board)	STC Rating
64mm x 2	25mm Min	153mm	+0
64mm x 2	77mm Min	205mm	+2

Wall Sound Absorber

Install Sound Absorber between studs on one side of the double frame. Use 75mm thick R1.8 glass wool blanket.

Plasterboard Lining

NB: The installer must look for the Product Identification Code on the face paper to ensure the correct board type is installed. Refer to the Face Paper Product Identification Code table on this page.

One layer of 13mm EPB® Standard and One layer of 13mm EPB BraceSmart®/NoiseSmart® fixed to each side of the double steel framing.

Vertical fixing only permitted. Use full height sheets where possible. Inner layer joints on opposite side of frame should be offset. All sheet joints must be fixed over steel framing. Vertical joints of the outer layer should be offset by 600mm to those of the inner layer. Sheet end butt joints must be formed over nogs and offset the outer layer joints from the inner layer. The inner layers are fixed hard to the floor. Sheets shall be touch fitted.

Fixing of Linings

Fasteners

System Number	Side One		Side Two	
	1st Layer	2nd Layer	1st Layer	2nd Layer
	Self-Tapping Drywall Screws			
E4SDA75-MS52	13mm	13mm	13mm	13mm
	25 x 6g	41 x 6g	25 x 6g	41 x 6g

Fastener Centres

Inner Layer: Fix at 300mm centres up each stud with no fixings to top and bottom channel.

Outer Layer: Fix at 300mm centres up each stud with no fixing to top and bottom channel sections.

Place fasteners no closer than 12mm to sheet edge and 50mm from sheet ends.

Place fasteners at 200mm centres where sheet end butt joints occur.

Avoid outer layer screws from hitting inner layer screws.

Acoustic Sealant

A bead of acoustical sealant is required around the perimeter of the inner layer and the outer layer is bedded onto the bead. The perimeter junctions of the wall must be airtight.

Jointing

Inner Layer: Unstopped.

Outer Layer: All fastener heads stopped and all sheet joints reinforced and stopped. Wall to ceiling junctions are to be reinforced with paper tape and square stopped or finished with Cornice. All in accordance with EPB® Plasterboard Installation Guide.

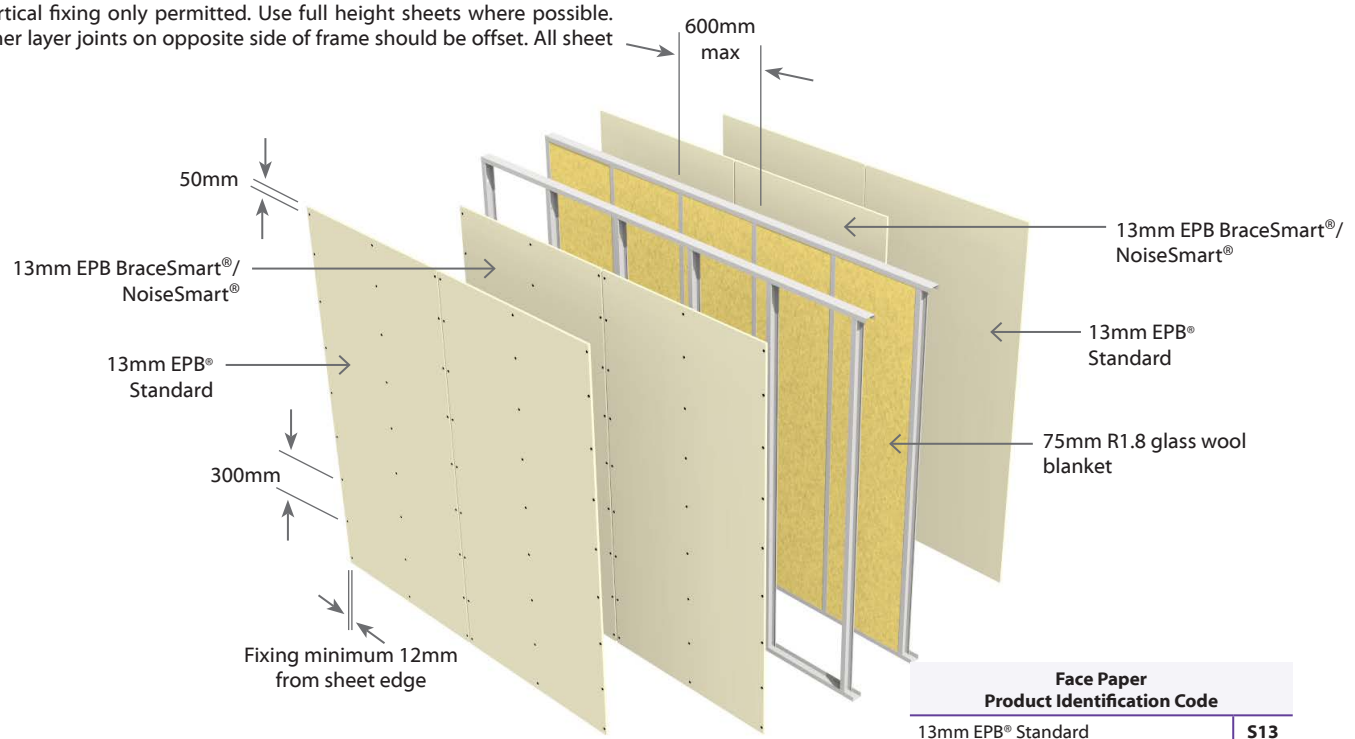

Face Paper Product Identification Code	
13mm EPB® Standard	**S13**
13mm EPB BraceSmart®/NoiseSmart®	**M13**

E4SDA90 Double Steel Frame | Non Load Bearing | Two Way FRR

4 Layers: 2 Layers of Plasterboard to each side of frame | Full Intertenancy Acoustic

System Number	Lining Suffix	FRR	Load Bearing Ability	Noise Control*		Lining Requirement
				STC	Rw	
E4SDA90	-F52	-/90/90	NLB	62	61	2 x 13mm EPB FireSmart® each side
	-M52	-/90/90	NLB	65	64	2 x 13mm EPB BraceSmart®/NoiseSmart® each side

*Acoustic Performance improves with increase of Partition Width. See 'Minimum Partition Width' Table below.

Framing

Double Frame - Steel studs to be of minimum dimension 64mm x 34mm x 0.50 BMT with a 6mm return.
Tracks to be minimum dimension 64mm x 30mm x 0.50 BMT.
Top & bottom tracks are fixed to the floor and ceiling in true alignment.
Studs are placed at 600mm centres maximum. Studs aligned.
Place studs to allow the nominated expansion gap (minimum 15mm) at the top of frame. The studs are not directly fixed to the tracks. The studs are held in place by the grip of the track runners.

Wall Heights

Recommended maximum height is 2.7m. Higher walls may be subject to specific engineering design or consult the framing manufacturer.

Minimum Partition Width

Space between Frames shall be a minimum of 25mm.

In order to achieve the STC ratings in the table above the partition width (excluding the board) shall be a minimum of 153mm. Increasing the partition width would increase STC performance as per the table below.

Stud Depth	Space Between Frames	Partition Width (Excludes Board)	STC Rating
64mm x 2	25mm Min	153mm	+0
64mm x 2	77mm Min	205mm	+2

Wall Sound Absorber

Install Sound Absorber between studs on one side of the double frame. Use 75mm thick R1.8 glass wool blanket.

Plasterboard Lining

NB: The installer must look for the Product Identification Code on the face paper to ensure the correct board type is installed. Refer to the Face Paper Product Identification Code table on this page.

Two layers of EPB® Plasterboard lining as per specified system above, fixed to each side of the double steel framing.

Vertical fixing only permitted. Use full height sheets where possible. Inner layer joints on opposite side of frame should be offset.

All sheet joints must be fixed over steel framing. Vertical joints of the outer layer should be offset by 600mm to those of the inner layer. Sheet end butt joints must be formed over nogs and offset the outer layer joints from the inner layer. The inner layers are fixed hard to the floor. Sheets shall be touch fitted.

Fixing of Linings

Fasteners

System Number	Side One		Side Two	
	1st Layer	2nd Layer	1st Layer	2nd Layer
	Self-Tapping Drywall Screws			
E4SDA90-F52 E4SDA90-M52	13mm	13mm	13mm	13mm
	25 x 6g	41 x 6g	25 x 6g	41 x 6g

Fastener Centres

Inner Layer: Fix at 300mm centres up each stud with no fixings to top and bottom channel.

Outer Layer: Fix at 300mm centres up each stud with no fixing to top and bottom channel sections.

Place fasteners no closer than 12mm to sheet edge and 50mm from sheet ends.

Place fasteners at 200mm centres where sheet end butt joints occur.

Avoid outer layer screws from hitting inner layer screws.

Acoustic Sealant

A bead of acoustical sealant is required around the perimeter of the inner layer and the outer layer is bedded onto the bead. The perimeter junctions of the wall must be airtight.

Jointing

Inner Layer: Unstopped.

Outer Layer: All fastener heads stopped and all sheet joints reinforced and stopped. Wall to ceiling junctions are to be reinforced with paper tape and square stopped or finished with Cornice. All in accordance with EPB® Plasterboard Installation Guide.

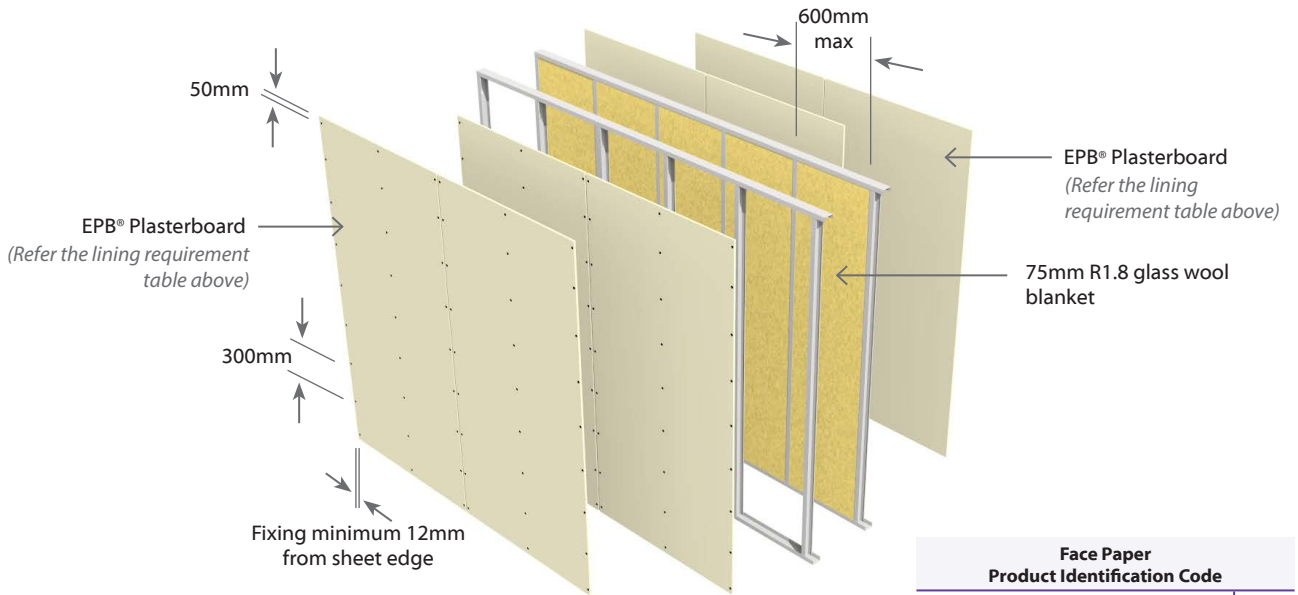

Face Paper Product Identification Code	
13mm EPB FireSmart®	F13
13mm EPB BraceSmart®/NoiseSmart®	M13

E2SDLA30 Double Steel Frame | Load Bearing | Two Way FRR

2 Layers: 1 Layer of Plasterboard to each side of frame | Full Intertenancy Acoustic

System Number	Lining Suffix	FRR	Load Bearing Ability	Noise Control*		Lining Requirement
				STC	Rw	
E2SDLA30	-M26	30/30/30	LB	55	54	1 x 13mm EPB BraceSmart®/NoiseSmart® each side
	-F32	30/30/30	LB	56	54	1 x 16mm EPB FireSmart® each side

*Acoustic Performance improves with increase of Partition Width. See 'Minimum Partition Width' Table below.

Framing

Double Frame - Any steel frame designed to meet structural criteria for strength and serviceability under dead and live loads.
Stud width shall be 35mm minimum.
Stud spacing's at 600 centres maximum. Studs aligned.
Frame heights as determined by specific design.

Minimum Partition Width

Space between Frames shall be a minimum of 25mm.

In order to achieve the STC ratings in the table above the partition width (excluding the board) shall be a minimum of 205mm. Increasing the partition width would increase STC performance as per the table below.

Stud Depth	Space Between Frames	Partition Width (Excludes Board)	STC Rating
90mm x 2	25mm Min	205mm	+0
90mm x 2	75mm Min	255mm	+2

Wall Sound Absorber

Install Sound Absorber between studs on both sides of the double frame. Use 75mm thick R1.8 glass wool blanket.

Plasterboard Lining

NB: The installer must look for the Product Identification Code on the face paper to ensure the correct board type is installed. Refer to the Face Paper Product Identification Code table on this page.

One layer of EPB® Plasterboard lining as per specified system above on each side of the double steel framing.

Vertical fixing only permitted. Use full height sheets where possible. Sheet edges and butt joints on opposite side of frame should be offset. All sheet joints must be fixed over steel framing. Sheet end butt joints must be formed over nogs. Sheets are fixed hard to the floor. Sheets shall be touch fitted.

Fixing of Linings

Fasteners (As per Specified System Above)

System Number	Side One	Side Two
	Single Layer	Single Layer
	Self-Tapping Drywall Screws	
E2SDLA30-M26	13mm	13mm
	25 x 6g	25 x 6g
E2SDLA30-F32	16mm	16mm
	32 x 6g	32 x 6g

Fastener Centres

Fix at 300mm centres up each stud with no fixing to top and bottom channel sections.

Place fasteners no closer than 12mm to the sheet edge and 50mm from sheet ends.

Place fasteners at 200mm centres where sheet end butt joints occur.

Acoustic Sealant

A bead of acoustic sealant is required around the perimeter of the framing and the single layer is bedded onto the bead. The perimeter junctions of the wall must be airtight.

Jointing

All fastener heads stopped and all sheet joints reinforced with paper jointing tape and stopped. Wall to ceiling junctions are to be reinforced with paper tape and square stopped or finished with Cornice. All in accordance with EPB® Plasterboard Installation Guide.

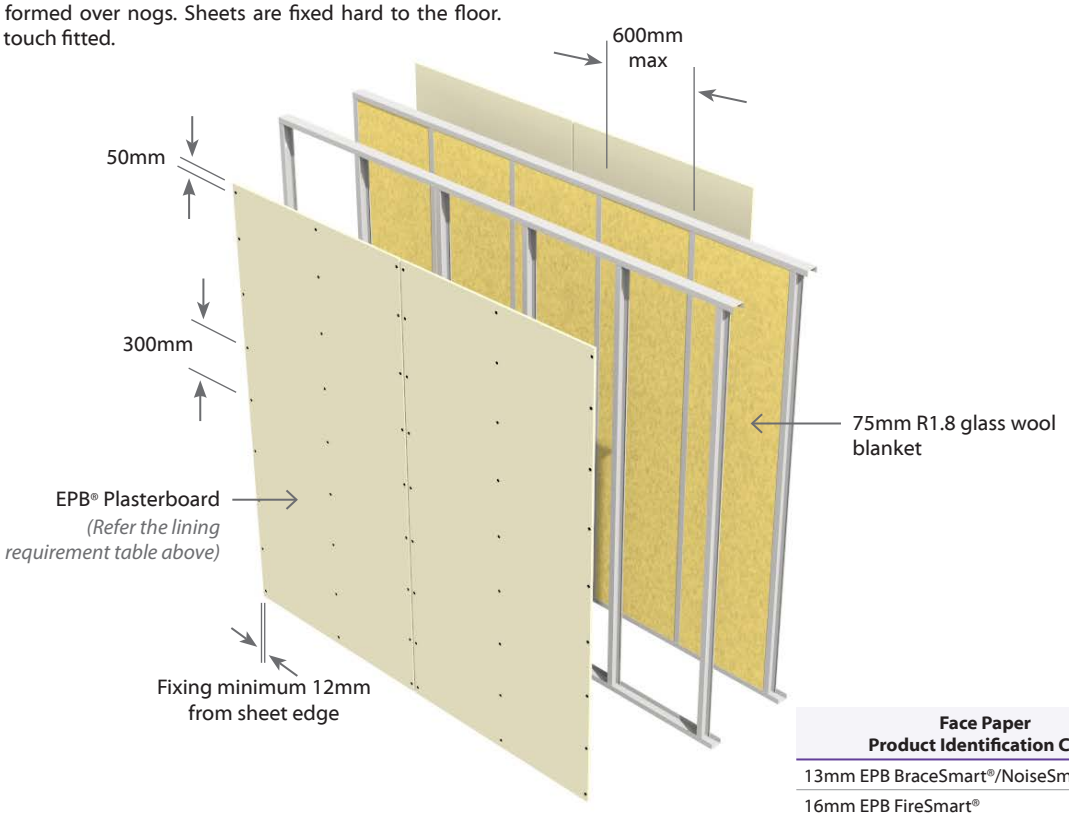

Face Paper Product Identification Code	
13mm EPB BraceSmart®/NoiseSmart®	M13
16mm EPB FireSmart®	F16

E3SDLA30 Double Steel Frame | Load Bearing | Two Way FRR

3 Layers: 1 Layer of Plasterboard on one side of frame & 2 Layers of Plasterboard on other side of frame

Full Intertenancy Acoustic

System Number	Lining Suffix	FRR	Load Bearing Ability	Noise Control*		Lining Requirement
				STC	Rw	
E3SDLA30	-MF33	30/30/30	LB	58	57	1 x 13mm EPB BraceSmart®/NoiseSmart® one side 2 x 10mm EPB FireSmart® other side
	-M39	30/30/30	LB	61	60	1 x 13mm EPB BraceSmart®/NoiseSmart® one side 2 x 13mm EPB BraceSmart®/NoiseSmart® other side

*Acoustic Performance improves with increase of Partition Width. See 'Minimum Partition Width' Table below.

Framing

Double Frame - Any steel frame designed to meet structural criteria for strength and serviceability under dead and live loads.
Stud width shall be 35mm minimum.
Stud spacing's at 600 centres maximum. Studs aligned.
Frame heights as determined by specific design.

Minimum Partition Width

Space between Frames shall be a minimum of 25mm.

In order to achieve the STC ratings in the table above the partition width (excluding the board) shall be a minimum of 153mm. Increasing the partition width would increase STC performance as per the table below.

Stud Depth	Space Between Frames	Partition Width (Excludes Board)	STC Rating
90mm x 2	25mm Min	205mm	+0
90mm x 2	75mm Min	255mm	+2

Wall Sound Absorber

Install Sound Absorber between studs on one side of the double frame. Use 75mm thick R1.8 glass wool blanket.

Plasterboard Lining

NB: The installer must look for the Product Identification Code on the face paper to ensure the correct board type is installed. Refer to the Face Paper Product Identification Code table on this page.

One layer of EPB® Plasterboard to One side of the double steel framing and Two layers to the Other Side as per specified system above.

Vertical fixing only permitted. Use full height sheets where possible. Inner layer joints on opposite side of frame should be offset. All sheet joints must be fixed over steel framing. Vertical joints of the outer layer should be offset by 600mm to those of the inner layer. Sheet end butt joints must be formed over nogs and offset the outer layer joints from the inner layer. The inner layers are fixed hard to the floor. Sheets shall be touch fitted.

Fixing of Linings

Fasteners (As per Specified System Above)

System Number	Side One		Side Two
	1st Layer	2nd Layer	Single Layer
	Self-Tapping Drywall Screws		
E3SDLA30-MF33	10mm	10mm	13mm
	25 x 6g	41 x 6g	25 x 6g
E3SDLA30-M39	13mm	13mm	13mm
	25 x 6g	41 x 6g	25 x 6g

Fastener Centres

Fix at 300mm centres up each stud with no fixing to top and bottom channel sections.

Place fasteners no closer than 12mm to the sheet edge and 50mm from sheet ends.

Place fasteners at 200mm centres where sheet end butt joints occur.

Avoid outer layer screws from hitting inner layer screws.

Acoustic Sealant

A bead of acoustic sealant is required around the perimeter of the framing or the inner layer. Then the single or outer layer is bedded onto the bead. The perimeter junctions of the wall must be airtight.

Jointing

All fastener heads stopped and all sheet joints reinforced with paper jointing tape and stopped. Wall to ceiling junctions are to be reinforced with paper tape and square stopped or finished with Cornice. All in accordance with EPB® Plasterboard Installation Guide.

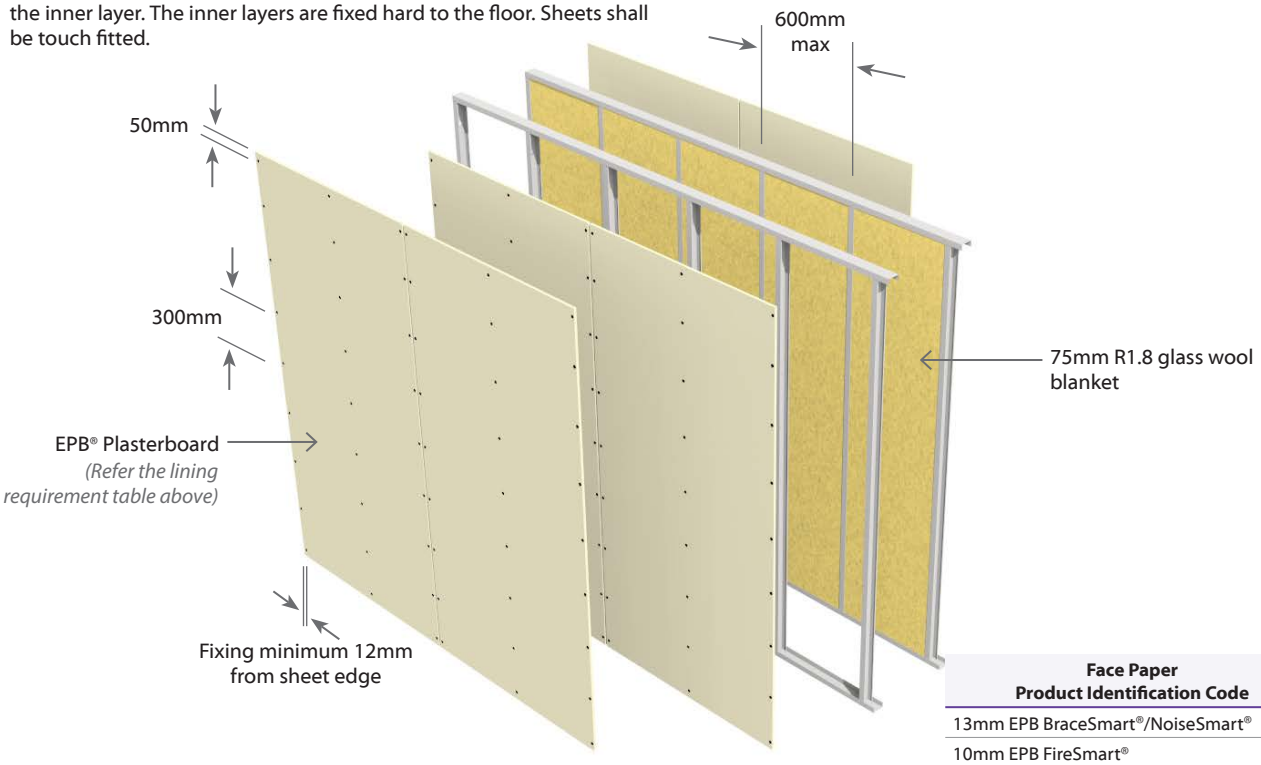

Face Paper Product Identification Code	
13mm EPB BraceSmart®/NoiseSmart®	M13
10mm EPB FireSmart®	F10

E4SDLA30 Double Steel Frame | Load Bearing | Two Way FRR

4 Layers: 2 Layers of Plasterboard to each side of frame | Full Intertenancy **A**coustic

System Number	Lining Suffix	FRR	Load Bearing Ability	Noise Control*		Lining Requirement
				STC	Rw	
E4SDLA30	**-F40**	30/30/30	LB	59	58	2 x 10mm EPB FireSmart® each side

*Acoustic Performance improves with increase of Partition Width. See 'Minimum Partition Width' Table below.

Framing

Double Frame - Any steel frame designed to meet structural criteria for strength and serviceability under dead and live loads.
Stud width shall be 35mm minimum.
Stud spacing's at 600 centres maximum. Studs aligned.
Frame heights as determined by specific design.

Minimum Partition Width

Space between Frames shall be a minimum of 25mm.

In order to achieve the STC ratings in the table above the partition width (excluding the board) shall be a minimum of 153mm. Increasing the partition width would increase STC performance as per the table below.

Stud Depth	Space Between Frames	Partition Width (Excludes Board)	STC Rating
90mm x 2	25mm Min	205mm	+0
90mm x 2	75mm Min	255mm	+2

Wall Sound Absorber

Install Sound Absorber between studs on one side of the double frame. Use 75mm thick R1.8 glass wool blanket.

Plasterboard Lining

NB: The installer must look for the Product Identification Code on the face paper to ensure the correct board type is installed. Refer to the Face Paper Product Identification Code table on this page.

Two layers of 10mm EPB FireSmart® lining fixed vertically to each side of the double steel framing.

Vertical fixing only permitted. Use full height sheets where possible. Inner layer joints on opposite side of frame should be offset. All sheet joints must be fixed over steel framing. Vertical joints of the outer layer should be offset by 600mm to those of the inner layer. Sheet end butt joints must be formed over nogs and offset the outer layer joints from the inner layer. The inner layers are fixed hard to the floor. Sheets shall be touch fitted.

Fixing of Linings

Fasteners

System Number	Side One		Side Two	
	1st Layer	2nd Layer	1st Layer	2nd Layer
	Self-Tapping Drywall Screws			
E4SDLA30-F40	10mm	10mm	10mm	10mm
	25 x 6g	41 x 6g	25 x 6g	41 x 6g

Fastener Centres

Inner Layer: Fix at 300mm centres up each stud with no fixings to top and bottom channel.

Outer Layer: Fix at 300mm centres up each stud with no fixing to top and bottom channel sections.

Place fasteners no closer than 12mm to sheet edge and 50mm from sheet ends.

Place fasteners at 200mm centres where sheet end butt joints occur.

Avoid outer layer screws from hitting inner layer screws.

Acoustic Sealant

A bead of acoustical sealant is required around the perimeter of the inner layer and the outer layer is bedded onto the bead. The perimeter junctions of the wall must be airtight.

Jointing

Inner Layer: Unstopped.

Outer Layer: All fastener heads stopped and all sheet joints reinforced and stopped. Wall to ceiling junctions are to be reinforced with paper tape and square stopped or finished with Cornice. All in accordance with EPB® Plasterboard Installation Guide.

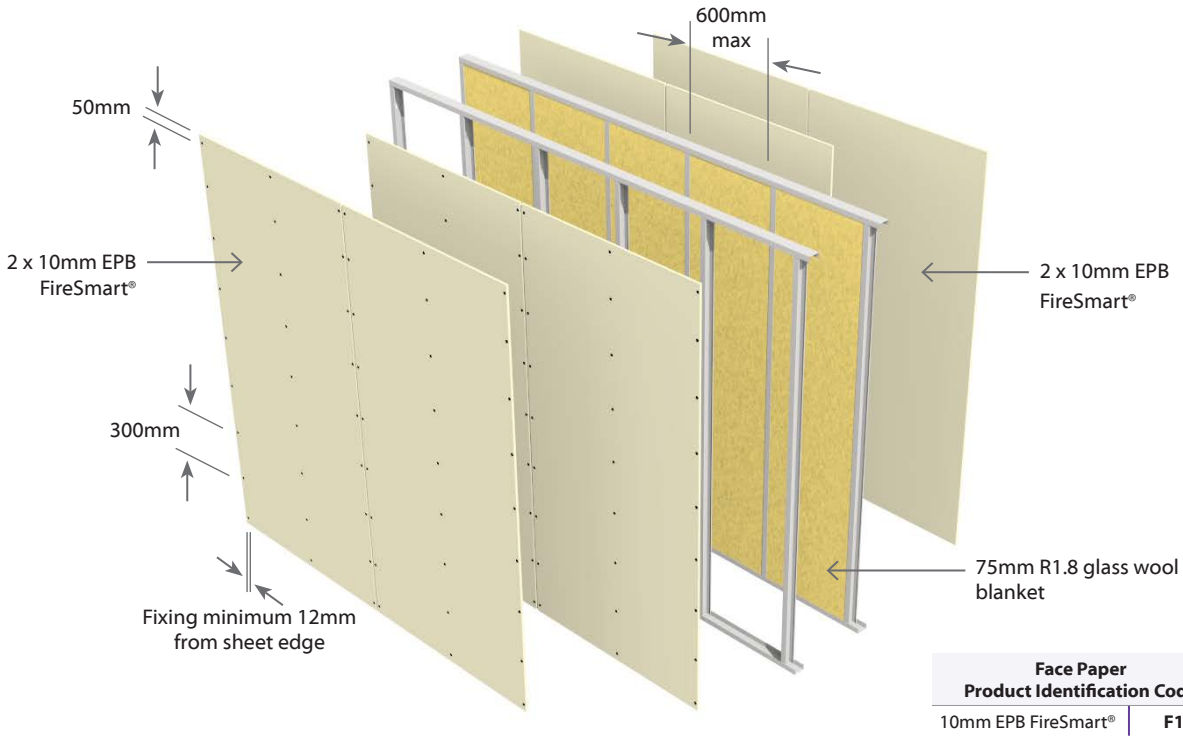

Face Paper Product Identification Code	
10mm EPB FireSmart®	**F10**

E4SDLA45 Double Steel Frame | Load Bearing | Two Way FRR

4 Layers: 2 Layers of Plasterboard to each side of frame | Full Intertenancy Acoustic

System Number	Lining Suffix	FRR	Load Bearing Ability	Noise Control*		Lining Requirement
				STC	Rw	
E4SDLA45	-S52	45/45/45	LB	61	60	2 x 13mm EPB® Standard each side
	-M40	45/45/45	LB	61	60	2 x 10mm EPB BraceSmart®/NoiseSmart® each side
	-F52	45/45/45	LB	63	62	2 x 13mm EPB FireSmart® each side

*Acoustic Performance improves with increase of Partition Width. See 'Minimum Partition Width' Table below.

Framing

Double Frame - Any steel frame designed to meet structural criteria for strength and serviceability under dead and live loads.
Stud width shall be 35mm minimum.
Stud spacing's at 600 centres maximum. Studs aligned.
Frame heights as determined by specific design.

Minimum Partition Width

Space between Frames shall be a minimum of 25mm.

In order to achieve the STC ratings in the table above the partition width (excluding the board) shall be a minimum of 153mm. Increasing the partition width would increase STC performance as per the table below.

Stud Depth	Space Between Frames	Partition Width (Excludes Board)	STC Rating
90mm x 2	25mm Min	205mm	+0
90mm x 2	75mm Min	255mm	+2

Wall Sound Absorber

Install Sound Absorber between studs on one side of the double frame. Use 75mm thick R1.8 glass wool blanket.

Plasterboard Lining

NB: The installer must look for the Product Identification Code on the face paper to ensure the correct board type is installed. Refer to the Face Paper Product Identification Code table on this page.

Two layers of EPB® Plasterboard to One side of the double steel framing and Two layers to the Other Side as per specified system above.

Vertical fixing only permitted. Use full height sheets where possible. Inner layer joints on opposite side of frame should be offset. All sheet joints must be fixed over steel framing. Vertical joints of the outer layer should be offset by 600mm to those of the inner layer. Sheet end butt joints must be formed over nogs and offset the outer layer joints from the inner layer. The inner layers are fixed hard to the floor. Sheets shall be touch fitted.

Fixing of Linings

Fasteners (As per Specified System Above)

System Number	Side One		Side Two	
	1st Layer	2nd Layer	1st Layer	2nd Layer
	Self-Tapping Drywall Screws			
E4SDLA45-S52 E4SDLA45-F52	13mm	13mm	13mm	13mm
	25 x 6g	41 x 6g	25 x 6g	41 x 6g
E4SDLA45-M40	10mm	10mm	10mm	10mm
	25 x 6g	41 x 6g	25 x 6g	41 x 6g

Fastener Centres

Inner Layer: Fix at 300mm centres up each stud with no fixings to top and bottom channel.

Outer Layer: Fix at 300mm centres up each stud with no fixing to top and bottom channel sections.

Place fasteners no closer than 12mm to sheet edge and 50mm from sheet ends.

Place fasteners at 200mm centres where sheet end butt joints occur.

Avoid outer layer screws from hitting inner layer screws.

Acoustic Sealant

A bead of acoustical sealant is required around the perimeter of the inner layer and the outer layer is bedded onto the bead. The perimeter junctions of the wall must be airtight.

Jointing

Inner Layer: Unstopped.

Outer Layer: All fastener heads stopped and all sheet joints reinforced and stopped. Wall to ceiling junctions are to be reinforced with paper tape and square stopped or finished with Cornice. All in accordance with EPB® Plasterboard Installation Guide.

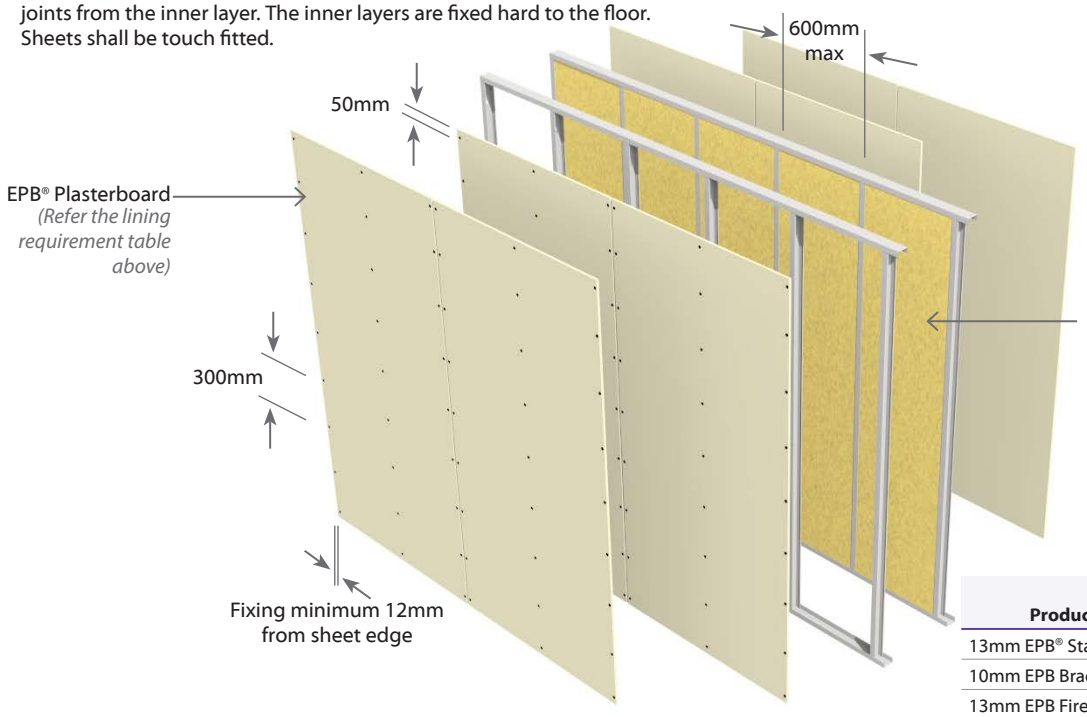

Face Paper Product Identification Code	
13mm EPB® Standard	S13
10mm EPB BraceSmart®/NoiseSmart®	M10
13mm EPB FireSmart®	F13

E4SDLA60 Double Steel Frame | Load Bearing | Two Way FRR

4 Layers: 2 Layers of Plasterboard to each side of frame | Full Intertenancy **A**coustic

System Number	Lining Suffix	FRR	Load Bearing Ability	Noise Control*		Lining Requirement
				STC	Rw	
E4SDLA60	**-M52**	60/60/60	LB	65	64	2 x 13mm EPB BraceSmart®/NoiseSmart® each side

*Acoustic Performance improves with increase of Partition Width. See 'Minimum Partition Width' Table below.

Framing

Double Frame - Any steel frame designed to meet structural criteria for strength and serviceability under dead and live loads.
Stud width shall be 35mm minimum.
Stud spacing's at 600 centres maximum. Studs aligned.
Frame heights as determined by specific design.

Minimum Partition Width

Space between Frames shall be a minimum of 25mm.

In order to achieve the STC ratings in the table above the partition width (excluding the board) shall be a minimum of 153mm. Increasing the partition width would increase STC performance as per the table below.

Stud Depth	Space Between Frames	Partition Width (Excludes Board)	STC Rating
90mm x 2	25mm Min	205mm	+0
90mm x 2	75mm Min	255mm	+2

Wall Sound Absorber

Install Sound Absorber between studs on one side of the double frame. Use 75mm thick R1.8 glass wool blanket.

Plasterboard Lining

NB: The installer must look for the Product Identification Code on the face paper to ensure the correct board type is installed. Refer to the Face Paper Product Identification Code table on this page.

Two layers of 13mm EPB BraceSmart®/NoiseSmart® lining fixed vertically to each side of the double steel framing.

Vertical fixing only permitted. Use full height sheets where possible. Inner layer joints on opposite side of frame should be offset.

Vertical joints of the outer layer should be offset to those of the inner layer. Sheet end butt joints do not need to be formed over solid framing however the inner layer butt joints must be offset from the outer layer. The inner layers are fixed hard to the floor. Sheets shall be touch fitted.

Fixing of Linings

Fasteners

System Number	Side One		Side Two	
	1st Layer	2nd Layer	1st Layer	2nd Layer
	Self-Tapping Drywall Screws			
E4SDLA60-M52	13mm	13mm	13mm	13mm
	25 x 6g	41 x 6g	25 x 6g	41 x 6g

Fastener Centres

Inner Layer: Fix at 300mm centres up each stud with no fixings to top and bottom channel.

Outer Layer: Fix at 300mm centres up each stud with no fixing to top and bottom channel sections.

Place fasteners no closer than 12mm to sheet edge and 50mm from sheet ends.

Place fasteners at 200mm centres where sheet end butt joints occur over solid framing.

Avoid outer layer screws from hitting inner layer screws.

Acoustic Sealant

A bead of acoustical sealant is required around the perimeter of the inner layer and the outer layer is bedded onto the bead. The perimeter junctions of the wall must be airtight.

Jointing

Inner Layer: Unstopped.

Outer Layer: All fastener heads stopped and all sheet joints reinforced and stopped. Wall to ceiling junctions are to be reinforced with paper tape and square stopped or finished with Cornice. All in accordance with EPB® Plasterboard Installation Guide.

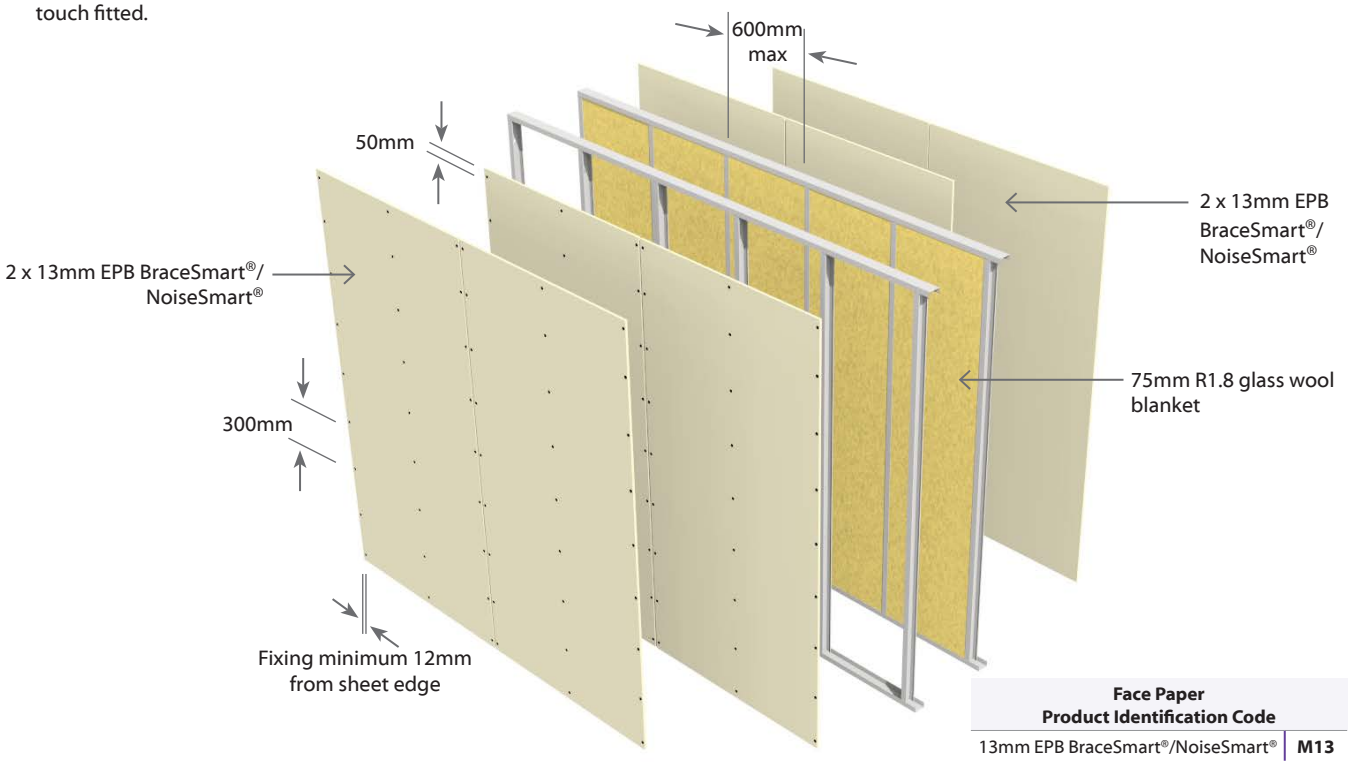

Face Paper Product Identification Code	
13mm EPB BraceSmart®/NoiseSmart®	**M13**

E4SDLA90 Double Steel Frame | Load Bearing | Two Way FRR

4 Layers: 2 Layers of Plasterboard to each side of frame | Full Intertenancy **A**coustic

System Number	Lining Suffix	FRR	Load Bearing Ability	Noise Control*		Lining Requirement
				STC	Rw	
E4SDLA90	**-F64**	90/90/90	LB	66	65	2 x 16mm EPB FireSmart® each side

*Acoustic Performance improves with increase of Partition Width. See 'Minimum Partition Width' Table below.

Framing

Double Frame - Any steel frame designed to meet structural criteria for strength and serviceability under dead and live loads.
Stud width shall be 35mm minimum.
Stud spacing's at 600 centres maximum. Studs aligned.
Frame heights as determined by specific design.

Minimum Partition Width

Space between Frames shall be a minimum of 25mm.

In order to achieve the STC ratings in the table above the partition width (excluding the board) shall be a minimum of 153mm. Increasing the partition width would increase STC performance as per the table below.

Stud Depth	Space Between Frames	Partition Width (Excludes Board)	STC Rating
90mm x 2	25mm Min	205mm	+0
90mm x 2	75mm Min	255mm	+2

Wall Sound Absorber

Install Sound Absorber between studs on one side of the double frame. Use 75mm thick R1.8 glass wool blanket.

Plasterboard Lining

NB: The installer must look for the Product Identification Code on the face paper to ensure the correct board type is installed. Refer to the Face Paper Product Identification Code table on this page.

Two layers of 16mm EPB FireSmart® lining fixed vertically to each side of the double steel framing.

Vertical fixing only permitted. Use full height sheets where possible. Inner layer joints on opposite side of frame should be offset. All sheet joints must be fixed over steel framing. Vertical joints of the outer layer should be offset by 600mm to those of the inner layer. Sheet end butt joints must be formed over nogs and offset the outer layer joints from the inner layer. The inner layers are fixed hard to the floor. Sheets shall be touch fitted.

Fixing of Linings

Fasteners

System Number	Side One		Side Two	
	1st Layer	2nd Layer	1st Layer	2nd Layer
	Self-Tapping Drywall Screws			
E4SDLA90-F64	16mm	16mm	16mm	16mm
	32 x 6g	51 x 7g	32 x 6g	51 x 7g

Fastener Centres

Inner Layer: Fix at 300mm centres up each stud with no fixings to top and bottom channel.

Outer Layer: Fix at 300mm centres up each stud with no fixing to top and bottom channel sections.

Place fasteners no closer than 12mm to sheet edge and 50mm from sheet ends.

Place fasteners at 200mm centres where sheet end butt joints occur.

Avoid outer layer screws from hitting inner layer screws.

Acoustic Sealant

A bead of acoustical sealant is required around the perimeter of the inner layer and the outer layer is bedded onto the bead. The perimeter junctions of the wall must be airtight.

Jointing

Inner Layer: Unstopped.

Outer Layer: All fastener heads stopped and all sheet joints reinforced and stopped. Wall to ceiling junctions are to be reinforced with paper tape and square stopped or finished with Cornice. All in accordance with EPB® Plasterboard Installation Guide.

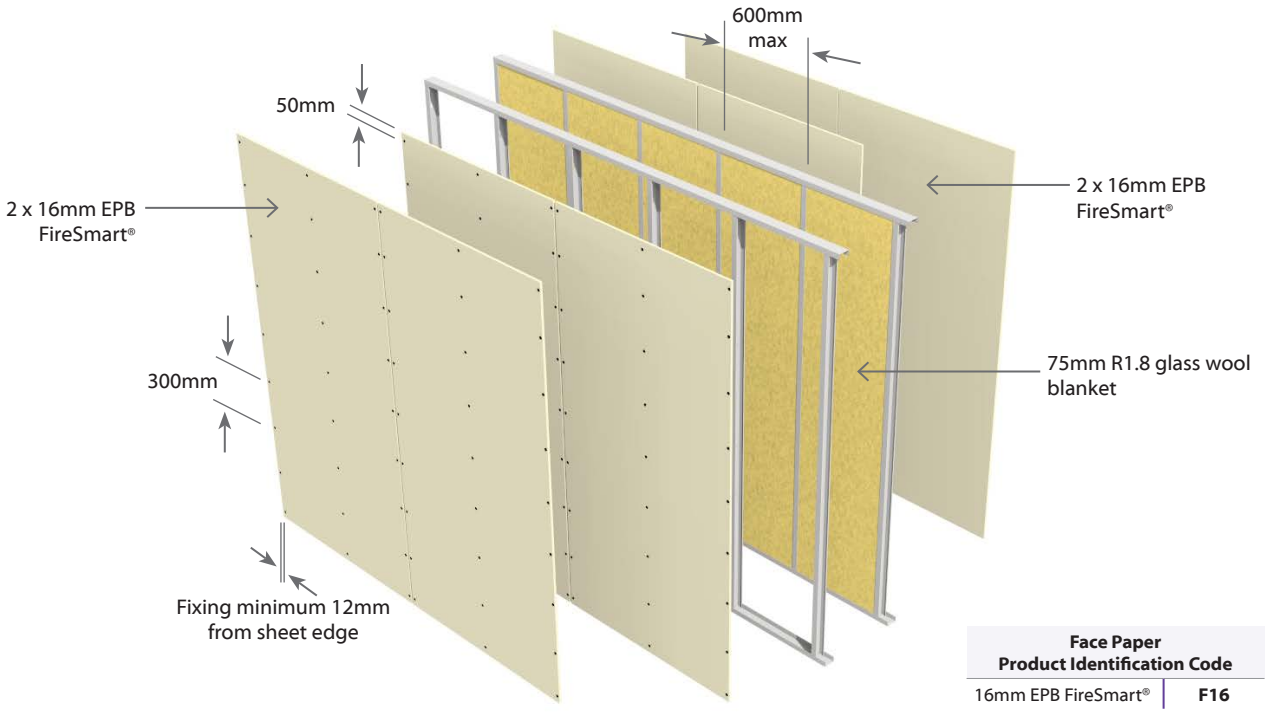

Face Paper Product Identification Code	
16mm EPB FireSmart®	**F16**

E4CSDA60 Double Steel Frame - 13mm FireSmart Central Liner Non Load Bearing Two Way FRR

4 Layers: 2 Layers of Plasterboard to each side of frame | Full Intertenancy **A**coustic

System Number	Lining Suffix	FRR	Load Bearing Ability	Noise Control*		Lining Requirement
				STC	Rw	
E4CSDA60	-FS46	-/60/60	NLB	56	56	1 x 13mm EPB FireSmart® and 1 x 10mm EPB® Standard each side
	-FS52	-/60/60	NLB	57	58	1 x 13mm EPB FireSmart® and 1 x 13mm EPB® Standard each side

Framing

Steel studs with minimum dimensions 64mm x 34mm x 0.55 BMT with 6mm return. Tracks to be minimum size 64mm x 30mm x 0.55 BMT and are fixed to floor and ceiling. Studs are friction fitted at 600mm centres maximum with a 15mm expansion gap at top of frame. No other fixings to the track allowed.

Wall Height

Recommended maximum height is 4.0m. For Wall heights over 3.4m allow a 20mm expansion tolerance at top of studs and use a 50mm deflection head channel at top of the wall.

13mm FireSmart Central Liner

- Fix top and bottom channel runners to slab at 600mm centres and not more than 150mm from ends using steel fasteners. Install studs at 600mm centres.
- Install 13mm EPB FireSmart® Central Liner vertically at 300mm to one side using 25mm x 6g Self Tapping Drywall screws. Fasteners to be placed at 12mm from sheet edges and 20mm clear of top and bottom channels. Sheet joins to be formed over framing.
- Second frame must be constructed against the Central Liner with channel runners fixed to top and bottom slabs and studs at 600mm centres. Offset this second frame by 300mm from the first frame.
- Fix the 13mm EPB FireSmart® Central Liner to the second frame using 25mm x 6g Self tapping drywall screws at 300mm centres. Fasteners to be placed at 12mm from sheet edges and 20mm clear of top and bottom channels. Sheet joins to be formed over framing.

Wall Sound Absorber

Install Sound Absorber between studs on both sides of the double frame. Use 50mm thick R1.2 glass wool blanket.

Plasterboard Lining

NB: The installer must look for the Product Identification Code on the face paper to ensure the correct board type is installed. Refer to the Face Paper Product Identification Code table on this page.

Two layers of EPB® Plasterboard fixed on each side of the frame as per specified system lining requirements table above.

Inner layer sheets to be fixed vertically to each open side of the double frame.

Outer layer sheets can be fixed horizontally or vertically.

Use full height or full length sheets where possible. All sheet joints must be fixed over steel framing.

Vertical joints of outer layer must be offset by 600mm from those of the inner layer if fixed vertically. Sheet end butt joints must be formed over nogs and offset the outer layer joints from the inner layer.

The inner layers are fixed hard to the floor. Sheets shall be touch fitted.

Acoustic Sealant

A bead of acoustical sealant is required around the perimeter of the inner layer and the outer layer is bedded onto the bead. The perimeter junctions of the wall must be airtight.

Fixing of Linings

Fasteners (As per Specified System Above)

System Number	1st Layer	2nd Layer
	Self Tapping Drywall Screws	
E4CSDA60-FS46	13mm	10mm
	25 x 6g	41 x 6g
E4CSDA60-FS52	13mm	13mm
	25 x 6g	41 x 6g

Fastener Centres

Fix inner layer at 300mm centres on all studs and 20mm clear of top and bottom channels.

When fixing the outer layer vertically , the board should be offset from inner layer sheet joints.

Fix the outer layer at 300mm centres to all studs and 30mm clear of top and bottom channels.

In places where horizontal joint crosses, use pair of single fasteners.

Use Adhesive to replace screws in the field of sheet of outer layer sheets.

Screws at sheet edges must not be replaced with Adhesive. Adhesive to be used within 20mm of screw fixing.

Penetrations

Penetrations in cavities are permitted on either side of the Central liner for plumbing and electrical services.

Minimum 10mm clearance must be allowed between plumbing or electrical services and Central Liner for back-to-back services and penetrations.

Fire stopping for penetrations are not required for Metal and PVC Plumbing services up to 65mm diameter. 6mm max clearance gap around the plumbing services are required for penetrations through plasterboard linings. Gaps to be filled with flexible sealant.

Penetration of electrical services up to 90 x 50mm do not require to be fire-stopped. Flush boxes are limited to two per 600mm wide stud bay.

For larger penetrations and penetrations through 13mm EPB FireSmart® Central Liner, suitable proprietary fire-stopping is required.

Penetrations through 13mm EPB FireSmart® Central Liner may reduce the noise control performance of the system.

Plasterboard lining for Wet Area

If outer layer of 10mm EPB® Standard board is replaced with 10mm EPB AquaSmart®, the FRR and noise control ratings will be retained.

If outer layer of 13mm EPB® Standard board is replaced with 13mm EPB AquaSmart®, the FRR and noise control ratings will be retained.

Jointing

Central Liner: Unstopped

Inner Layer: Unstopped.

Outer Layer: All fastener heads stopped and all sheet joints reinforced and stopped. Wall to ceiling junctions are to be reinforced with paper tape and square stopped or finished with Cornice. All in accordance with EPB® Plasterboard Installation Guide.

E4CSDA60 Double Steel Frame - 13mm FireSmart Central Liner | Non Load Bearing | Two Way FRR

4 Layers: 2 Layers of Plasterboard to each side of frame | Full Intertenancy **A**coustic

System Number	Lining Suffix	FRR	Load Bearing Ability	Noise Control*		Lining Requirement
				STC	Rw	
E4CSDA60	**-FS46**	-/60/60	NLB	56	56	1 x 13mm EPB FireSmart® and 1 x 10mm EPB® Standard each side
	-FS52	-/60/60	NLB	57	58	1 x 13mm EPB FireSmart® and 1 x 13mm EPB® Standard each side

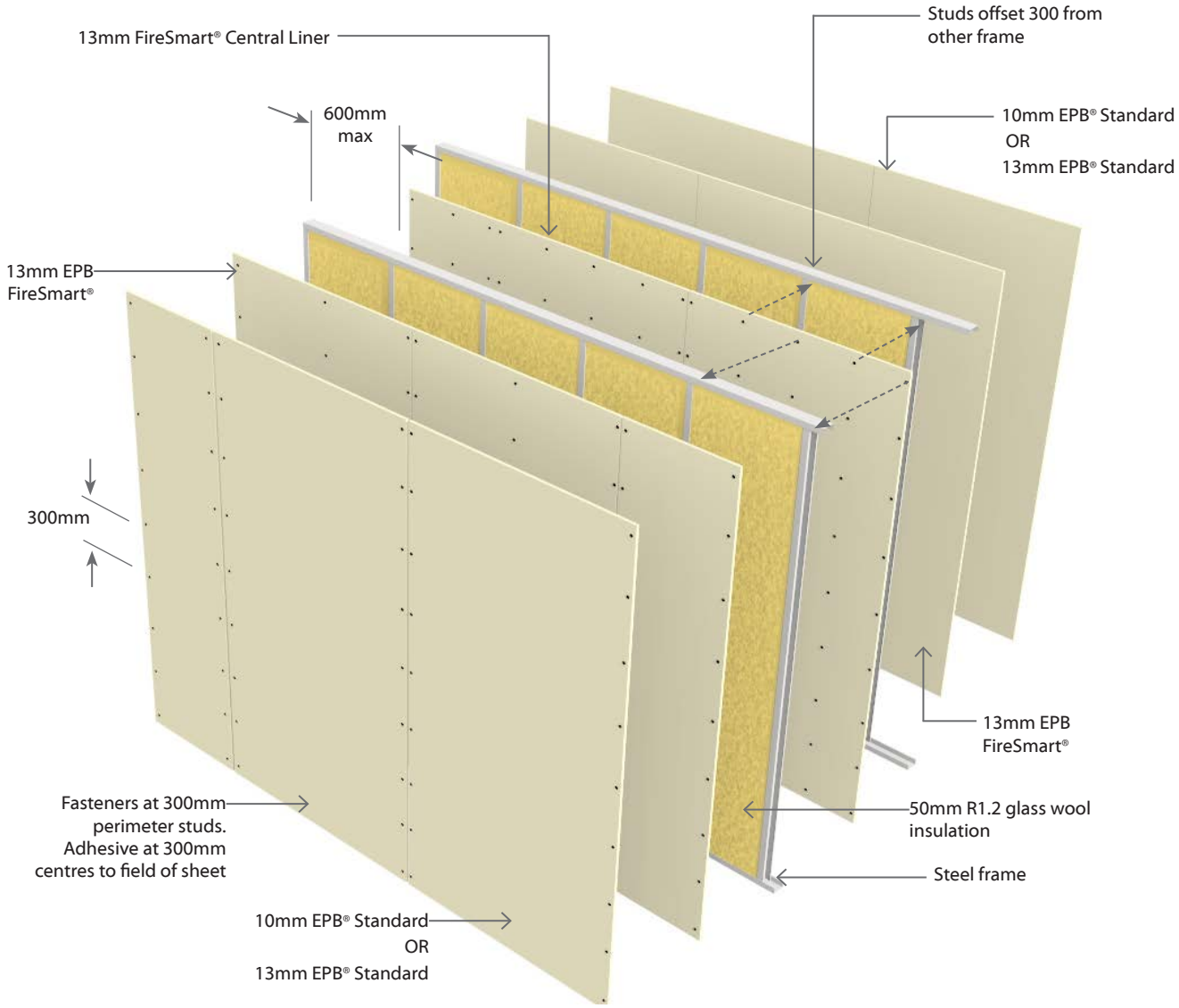

Face Paper Product Identification Code	
10mm EPB® Standard	**S10**
13mm EPB® Standard	**S13**
13mm EPB FireSmart®	**F13**

E3SMA30 Steel Frame with Resilient Mount

Non Load Bearing | Two Way FRR

3 Layers: 1 Layer of Plasterboard to Framing side & 2 Layers of Plasterboard on Mount side

Full Intertenancy Acoustic

System Number	Lining Suffix	FRR	Load Bearing Ability	Noise Control*		Lining Requirement
				STC	Rw	
E3SMA30	**-M30**	-/30/30	NLB	55	54	Frame Side: 1 x 10mm EPB BraceSmart®/NoiseSmart® Mount Side: 2 x 10mm EPBBraceSmart®/NoiseSmart®

Framing

Steel studs with minimum dimensions 64mm x 34mm x 0.55 BMT with 6mm return. Tracks to be minimum size 64mm x 30mm x 0.55 BMT and are fixed to floor and ceiling in true alignment. Studs are placed at 600mm centres maximum.

Studs are placed with a 15mm expansion gap at top of frame. The studs are not directly fixed to tracks. The studs are held in place by the grip of the channel runners. No other fixing is to be used.

Wall Heights

Recommended maximum height is 2.7m. Higher walls may be subject to specific engineering design or consult the framing manufacturer.

Partition Width

In order to achieve the STC ratings in the table above the partition width (excluding the board) shall be a minimum of 104mm.

Stud Depth	Mount + Channel	Lining Suffix	Plasterboard	Total Partition
64mm	40mm	**M30**	30mm	134mm
		S39	39mm	143mm

Wall Sound Absorber

Install Sound Absorber between studs of the frame. Use 75mm thick R1.8 glass wool blanket.

Acoustic Resilient Mount

The Resilient Mount shall be fixed to the studs at 600mm centres vertically and on every alternative stud using 32mm x 8g wafer head screws. When adjusting the clip for depth, 3mm rubber must remain between the underside of the steel spacer head and the furring channel. The Furring channels shall have a minimum depth of 28mm (e.g Rondo 129) and are clipped horizontally into the Mounts. Joints must be made as close as possible to the clips.

Plasterboard Lining

NB: The installer must look for the Product Identification Code on the face paper to ensure the correct board type is installed. Refer to the Face Paper Product Identification Code table on this page.

Framing Side: One layer of 10mm EPB BraceSmart®/NoiseSmart® Plasterboard lining fixed vertically. All sheet joints must be fixed over steel framing.

Resilient Mount Side: Two layers of 10mm EPB BraceSmart®/NoiseSmart® fixed vertically on the furring channel. Vertical joints of outer layer should be offset by 600mm from those of the inner layer. Use full height sheets where possible. The inner layers are fixed hard to the floor.

Sheet end butt joints must be formed over nogs or furring channels and offset the outer layer joints from the inner layer. Sheets shall be touch fitted.

Fixing of Linings

Fasteners

System Number	Furring Channel Side		Framing Side
	1st Layer	2nd Layer	Single Layer
	Self-Tapping Drywall Screws		
E3SMA30-M30	10mm	10mm	10mm
	25 x 6g	32 x 6g	25 x 6g

Fastener Centres

Framing Side: Fix at 300mm centres up each stud with no fixing to top or bottom channel sections.

Place fasteners no closer than 12mm to the sheet edge and 50mm from sheet ends.

Resilient Mount Side: Fix 300mm centres along each furring channel. Place fasteners minimum 12mm from sheet edges and sheet ends.

Place fasteners at 200mm centres where sheet end butt joints occur. Avoid outer layer screws from hitting inner layer screws.

Acoustic Sealant

A bead of acoustic sealant is required around the perimeter of the framing or the inner layer. The single or outer layer is then bedded onto the bead. The perimeter junctions of the wall must be airtight.

Jointing

Inner Layer: Unstopped.

Outer or Single Layer: All fastener heads stopped and all sheet joints reinforced with paper jointing tape and stopped. Wall to ceiling junctions are to be reinforced with paper tape and square stopped or finished with Cornice. All in accordance with EPB® Plasterboard Installation Guide.

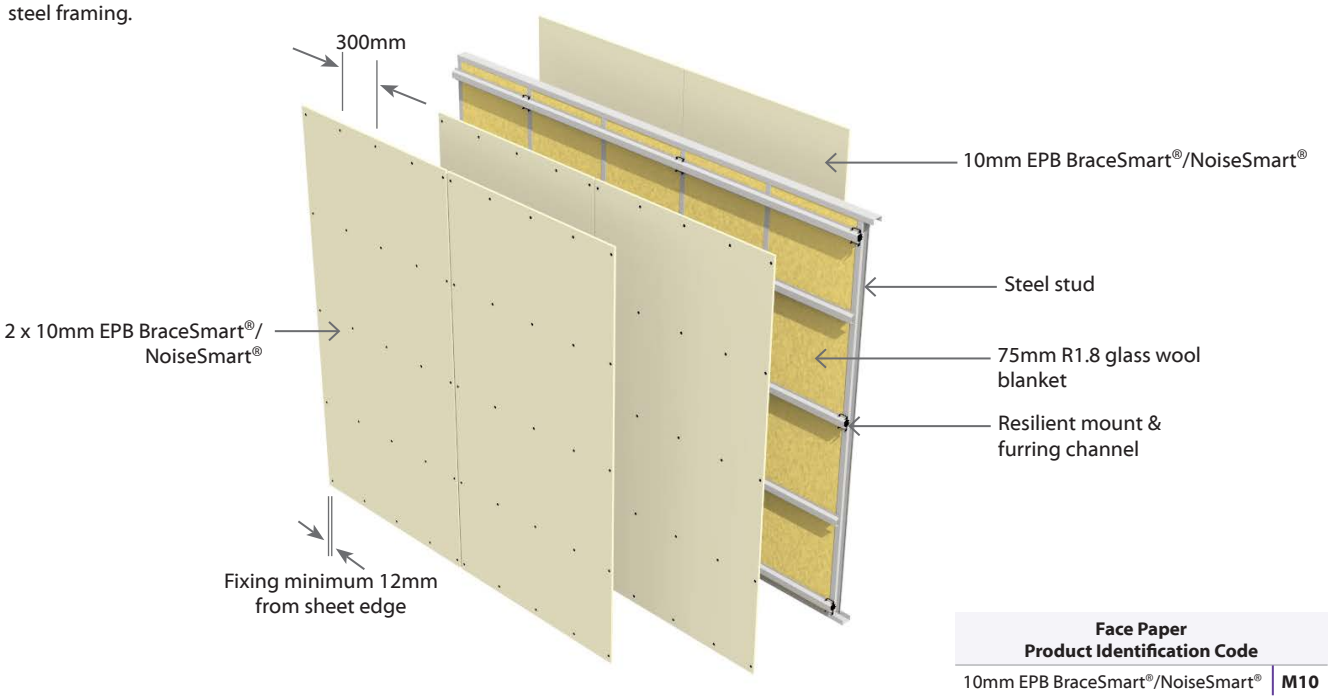

Face Paper Product Identification Code	
10mm EPB BraceSmart®/NoiseSmart®	**M10**

E4SMA30 Steel Frame with Resilient Mount | Non Load Bearing | Two Way FRR

4 Layers: 2 Layers of Plasterboard to Framing side &
2 Layers of Plasterboard on Mount side

Full Intertenancy Acoustic

System Number	Lining Suffix	FRR	Load Bearing Ability	Noise Control*		Lining Requirement
				STC	Rw	
E4SMA30	**-F40**	-/30/30	NLB	56	55	Frame Side: 2 x 10mm EPB FireSmart® Mount Side: 2 x 10mm EPB FireSmart®

Framing

Steel studs with minimum dimensions 64mm x 34mm x 0.55 BMT with 6mm return. Tracks to be minimum size 64mm x 30mm x 0.55 BMT and are fixed to floor and ceiling in true alignment. Studs are placed at 600mm centres maximum.

Studs are placed with a 15mm expansion gap at top of frame. The studs are not directly fixed to tracks. The studs are held in place by the grip of the channel runners.

No other fixing is to be used.

Wall Heights

Recommended maximum height is 2.7m. Higher walls may be subject to specific engineering design or consult the framing manufacturer.

Partition Width

In order to achieve the STC ratings in the table above the partition width (excluding the board) shall be a minimum of 104mm.

Stud Depth	Mount + Channel	Lining Suffix	Plaster-board	Total Partition
64mm	40mm	**S40**	40mm	144mm

Wall Sound Absorber

Install Sound Absorber between studs of the frame. Use 75mm thick R1.8 glass wool blanket.

Acoustic Resilient Mount

The Resilient Mount shall be fixed to the studs at 600mm centres vertically and on every alternative stud using 32mm x 8g wafer head screws. When adjusting the clip for depth. 3mm rubber must remain between the underside of the steel spacer head and the furring channel. The Furring channels are clipped horizontally into the Mounts. Joints must be made as close as possible to the clips.

Plasterboard Lining

NB: The installer must look for the Product Identification Code on the face paper to ensure the correct board type is installed. Refer to the Face Paper Product Identification Code table on this page.

Framing Side: Two layer of 10mm EPB FireSmart® lining fixed vertically. Vertical joints of outer layer should be offset by 600mm from those of the inner layer. All sheet joints must be fixed over steel framing.

Resilient Mount Side: Two Layers of 10mm EPB FireSmart® lining fixed vertically on the furring channel. Vertical joints of outer layer should be offset by 600mm from those of the inner layer.

Use full height sheets where possible. The inner layers are fixed hard to the floor. Sheet end butt joints must be formed over nogs or furring channels and offset the outer layer joints from the inner layer.

Sheets shall be touch fitted.

Fixing of Linings

Fasteners

System Number	Furring Channel Side		Framing Side	
	1st Layer	2nd Layer	1st Layer	2nd Layer
	Self-Tapping Drywall Screws			
E4SMA30-F40	10mm	10mm	10mm	10mm
	25 x 6g	32 x 6g	25 x 6g	32 x 6g

Fastener Centres

Framing Side: Fix at 300mm centres up each stud with no fixing to top or bottom channel sections.

Place fasteners no closer than 12mm to the sheet edge and 50mm from sheet ends.

Resilient Mount Side: Fix 300mm centres along each furring channel. Place fasteners minimum 12mm from sheet edges and sheet ends.

Place fasteners at 200mm centres where sheet end butt joints occur.

Avoid outer layer screws from hitting inner layer screws.

Acoustic Sealant

A bead of acoustical sealant is required around the perimeter of the inner layer and the outer layer is bedded onto the bead. The perimeter junctions of the wall must be airtight.

Jointing

Inner Layer: Unstopped

Outer Layer: All fastener heads stopped and all sheet joints reinforced with paper jointing tape and stopped. Wall to ceiling junctions are to be reinforced with paper tape and square stopped or finished with Cornice. All in accordance with EPB® Plasterboard Installation Guide.

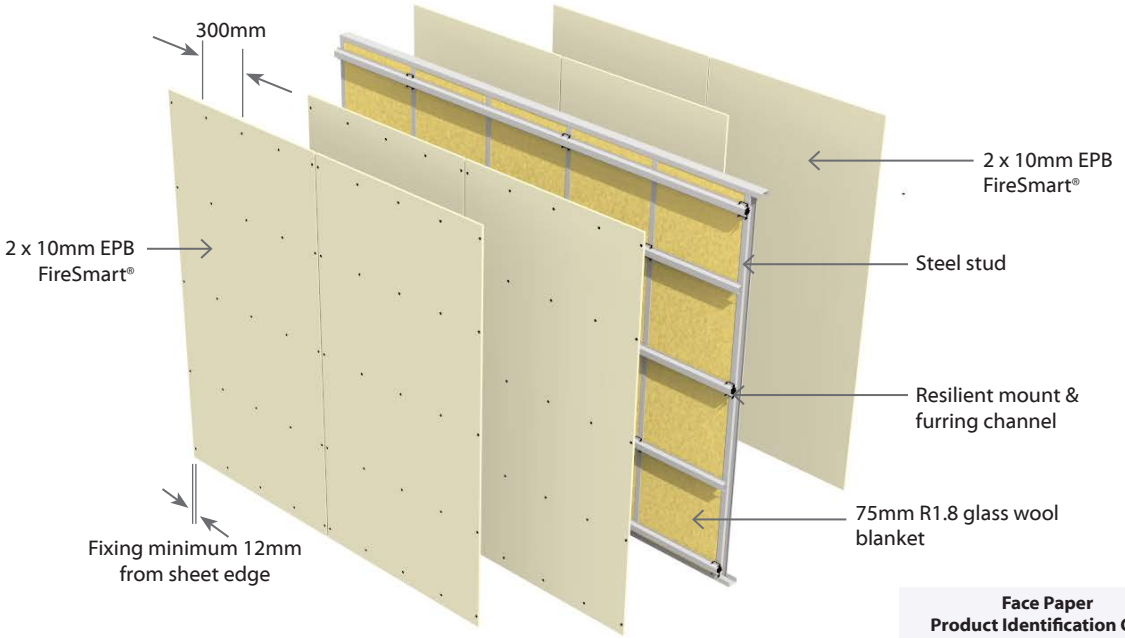

Face Paper Product Identification Code	
10mm EPB FireSmart®	**F10**

E3SMA60 Steel Frame with Resilient Mount | Non Load Bearing | Two Way FRR

3 Layers: 1 Layer of Plasterboard to Framing side & 2 Layers of Plasterboard on Mount side | Full Intertenancy **A**coustic

System Number	Lining Suffix	FRR	Load Bearing Ability	Noise Control		Lining Requirement
				STC	Rw	
E3SMA60	-MS39	-/60/60	NLB	56	55	Frame Side: 1 x 13mm EPB BraceSmart®/NoiseSmart® Mount Side: 2 x 13mm EPB® Standard
	-M39	-/60/60	NLB	57	56	Frame Side: 1 x 13mm EPB BraceSmart®/NoiseSmart® Mount Side: 2 x 13mm EPB BraceSmart®/NoiseSmart®

Framing

Steel studs with minimum dimensions 64mm x 34mm x 0.55 BMT with 6mm return. Tracks to be minimum size 64mm x 30mm x 0.55 BMT and are fixed to floor and ceiling in true alignment. Studs are placed at 600mm centres maximum.

Studs are placed with a 15mm expansion gap at top of frame. The studs are not directly fixed to tracks. The studs are held in place by the grip of the channel runners. No other fixing is to be used.

Wall Heights

Recommended maximum height is 2.7m. Higher walls may be subject to specific engineering design or consult the framing manufacturer.

Partition Width

In order to achieve the STC ratings in the table above the partition width (excluding the board) shall be a minimum of 104mm.

Stud Depth	Mount + Channel	Lining Suffix	Plasterboard	Total Partition
64mm	40mm	MS39	39mm	143mm
		M39	39mm	143mm

Wall Sound Absorber

Install Sound Absorber between studs of the frame. Use 75mm thick R1.8 glass wool blanket.

Acoustic Resilient Mount

The Resilient Mount shall be fixed to the studs at 600mm centres vertically and on every alternative stud using 32mm x 8g wafer head screws. When adjusting the clip for depth, 3mm rubber must remain between the underside of the steel spacer head and the furring channel. The Furring channels are clipped horizontally into the Mounts. Joints must be made as close as possible to the clips.

Plasterboard Lining

NB: The installer must look for the Product Identification Code on the face paper to ensure the correct board type is installed. Refer to the Face Paper Product Identification Code table on this page.

Framing Side: One layer of EPB® Plasterboard lining fixed vertically. All sheet joints must be fixed over steel framing.

Resilient Mount Side: Two layers fixed vertically on the furring channel. Vertical joints of outer layer should be offset by 600mm from those of the inner layer.

Use full height sheets where possible. The inner layers are fixed hard to the floor. Sheet end butt joints must be formed over nogs or furring channels and offset the outer layer joints from the inner layer. Sheets shall be touch fitted.

Fixing of Linings

Fasteners (As per Specified System Above)

System Number	Furring Channel Side		Framing Side
	1st Layer	2nd Layer	Single Layer
	Self-Tapping Drywall Screws		
E3SMA60-MS39	13mm	13mm	13mm
	25 x 6g	41 x 6g	25 x 6g
E3SMA60-M39	13mm	13mm	13mm
	25 x 6g	41 x 6g	25 x 6g

Fastener Centres

Framing Side: Fix at 300mm centres up each stud with no fixing to top or bottom channel sections.

Place fasteners no closer than 12mm to the sheet edge and 50mm from sheet ends.

Resilient Mount Side: Fix 300mm centres along each furring channel. Place fasteners minimum 12mm from sheet edges and sheet ends.

Place fasteners at 200mm centres where sheet end butt joints occur.

Avoid outer layer screws from hitting inner layer screws.

Acoustic Sealant

A bead of acoustic sealant is required around the perimeter of the framing or the inner layer. The single or outer layer is then bedded onto the bead. The perimeter junctions of the wall must be airtight.

Jointing

Inner Layer: Unstopped.

Outer or Single Layer: All fastener heads stopped and all sheet joints reinforced with paper jointing tape and stopped. Wall to ceiling junctions are to be reinforced with paper tape and square stopped or finished with Cornice. All in accordance with EPB® Plasterboard Installation Guide.

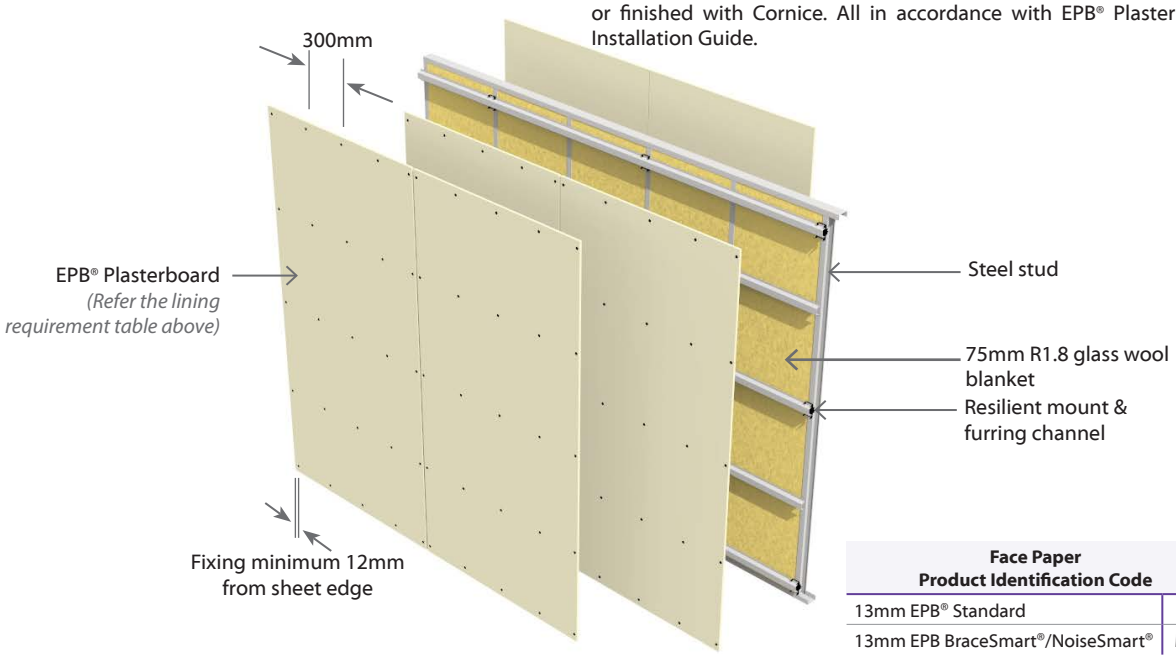

Face Paper Product Identification Code	
13mm EPB® Standard	S13
13mm EPB BraceSmart®/NoiseSmart®	M13

E4SMA60 Steel Frame with Resilient Mount | Non Load Bearing | Two Way FRR

4 Layers: 2 Layers of Plasterboard to Framing side & 2 Layers of Plasterboard on Mount side | Full Intertenancy **A**coustic

System Number	Lining Suffix	FRR	Load Bearing Ability	Noise Control		Lining Requirement
				STC	Rw	
E4SMA60	-S52	-/60/60	NLB	58	57	Frame Side: 2 x 13mm EPB® Standard Mount Side: 2 x 13mm EPB® Standard
	-M40	-/60/60	NLB	59	58	Frame Side: 2 x 10mm EPB BraceSmart®/NoiseSmart® Mount Side: 2 x 10mm EPB BraceSmart®/NoiseSmart®

Framing

Steel studs with minimum dimensions 64mm x 34mm x 0.55 BMT with 6mm return. Tracks to be minimum size 64mm x 30mm x 0.55 BMT and are fixed to floor and ceiling in true alignment. Studs are placed at 600mm centres maximum.

Studs are placed with a 15mm expansion gap at top of frame. The studs are not directly fixed to tracks. The studs are held in place by the grip of the channel runners. No other fixing is to be used.

Wall Heights

Recommended maximum height is 2.7m. Higher walls may be subject to specific engineering design or consult the framing manufacturer.

Partition Width

In order to achieve the STC ratings in the table above the partition width (excluding the board) shall be a minimum of 104mm.

Stud Depth	Mount + Channel	Lining Suffix	Plaster-board	Total Partition
64mm	40mm	S52	52mm	156mm
		M40	40mm	144mm

Wall Sound Absorber

Install Sound Absorber between studs of the frame. Use 75mm thick R1.8 glass wool blanket.

Acoustic Resilient Mount

The Resilient Mount shall be fixed to the studs at 600mm centres vertically and on every alternative stud using 32mm x 8g wafer head screws. When adjusting the clip for depth. 3mm rubber must remain between the underside of the steel spacer head and the furring channel. The Furring channels are clipped horizontally into the Mounts. Joints must be made as close as possible to the clips.

Plasterboard Lining

NB: The installer must look for the Product Identification Code on the face paper to ensure the correct board type is installed. Refer to the Face Paper Product Identification Code table on this page.

Framing Side: Two layer of EPB® Plasterboard lining fixed vertically. Vertical joints of outer layer should be offset by 600mm from those of the inner layer. All sheet joints must be fixed over steel framing.

Resilient Mount Side: Two Layers fixed vertically on the furring channel. Vertical joints of outer layer should be offset by 600mm from those of the inner layer.

Use full height sheets where possible. The inner layers are fixed hard to the floor. Sheet end butt joints must be formed over nogs or furring channels and offset the outer layer joints from the inner layer.

Sheets shall be touch fitted.

Fixing of Linings

Fasteners (As per Specified System Above)

System Number	Furring Channel Side		Framing Side	
	1st Layer	2nd Layer	1st Layer	2nd Layer
	Self-Tapping Drywall Screws			
E4SMA60-S52	13mm	13mm	13mm	13mm
	25 x 6g	41 x 6g	25 x 6g	41 x 6g
E4SMA60-M40	10mm	10mm	10mm	10mm
	25 x 6g	32 x 6g	25 x 6g	32 x 6g

Fastener Centres

Framing Side: Fix at 300mm centres up each stud with no fixing to top or bottom channel sections.

Place fasteners no closer than 12mm to the sheet edge and 50mm from sheet ends.

Resilient Mount Side: Fix 300mm centres along each furring channel. Place fasteners minimum 12mm from sheet edges and sheet ends.

Place fasteners at 200mm centres where sheet end butt joints occur.

Avoid outer layer screws from hitting inner layer screws.

Acoustic Sealant

A bead of acoustical sealant is required around the perimeter of the inner layer and the outer layer is bedded onto the bead. The perimeter junctions of the wall must be airtight.

Jointing

Inner Layer: Unstopped

Outer Layer: All fastener heads stopped and all sheet joints reinforced with paper jointing tape and stopped. Wall to ceiling junctions are to be reinforced with paper tape and square stopped or finished with Cornice. All in accordance with EPB® Plasterboard Installation Guide.

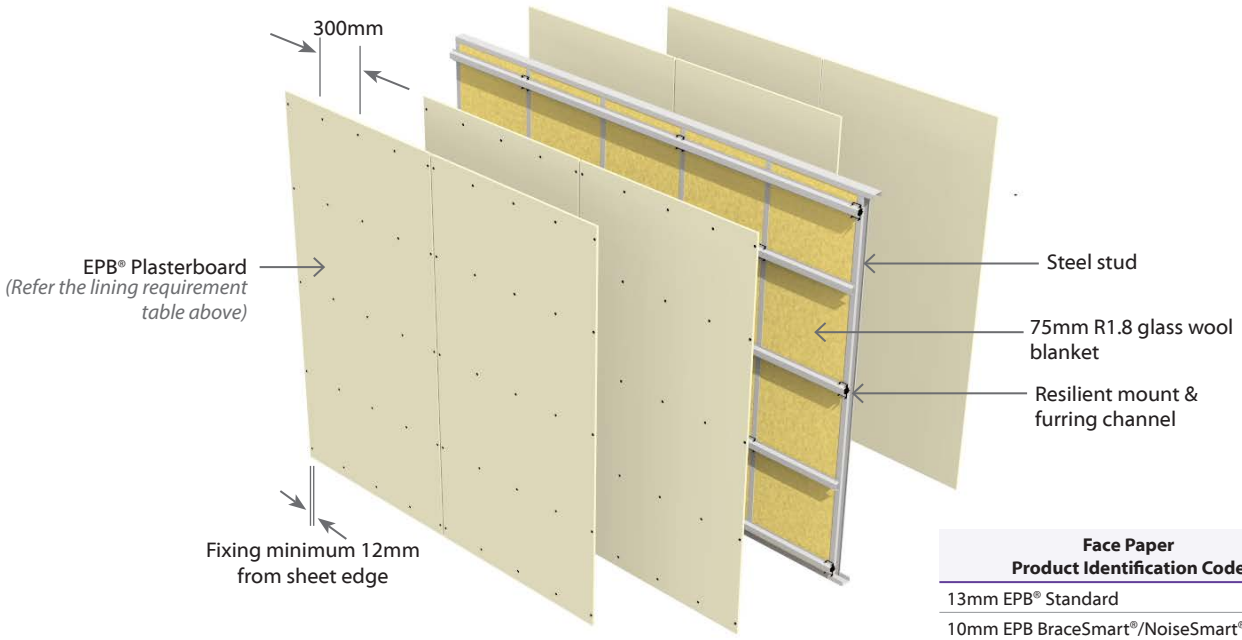

Face Paper Product Identification Code	
13mm EPB® Standard	S13
10mm EPB BraceSmart®/NoiseSmart®	M10

E4SMA90 — Steel Frame with Resilient Mount — Non Load Bearing — Two Way FRR

4 Layers: 2 Layers of Plasterboard to Framing side & 2 Layers of Plasterboard on Mount side

Full Intertenancy Acoustic

System Number	Lining Suffix	FRR	Load Bearing Ability	Noise Control		Lining Requirement
				STC	Rw	
E4SMA90	-M46	-/90/90	NLB	60	59	Frame Side: 1 x 13mm EPB BraceSmart®/NoiseSmart® & 1 x 10mm EPB BraceSmart®/NoiseSmart® Mount Side: 1 x 13mm & 1 x 10mm EPB BraceSmart®/NoiseSmart®
	-M52	-/90/90	NLB	62	61	Frame Side: 2 x 13mm EPB BraceSmart®/NoiseSmart® Mount Side: 2 x 13mm EPB BraceSmart®/NoiseSmart®

Framing

Steel studs with minimum dimensions 64mm x 34mm x 0.55 BMT with 6mm return. Tracks to be minimum size 64mm x 30mm x 0.55 BMT and are fixed to floor and ceiling in true alignment. Studs are placed at 600mm centres maximum.

Studs are placed with a 15mm expansion gap at top of frame. The studs are not directly fixed to tracks. The studs are held in place by the grip of the channel runners.

No other fixing is to be used.

Wall Heights

Recommended maximum height is 2.7m. Higher walls may be subject to specific engineering design or consult the framing manufacturer.

Partition Width

In order to achieve the STC ratings in the table above the partition width (excluding the board) shall be a minimum of 104mm.

Stud Depth	Mount + Channel	Lining Suffix	Plaster-board	Total Partition
64mm	40mm	M46	46mm	150mm
		M52	52mm	156mm

Wall Sound Absorber

Install Sound Absorber between studs of the frame. Use 75mm thick R1.8 glass wool blanket.

Acoustic Resilient Mount

The Resilient Mount shall be fixed to the studs at 600mm centres vertically and on every alternative stud using 32mm x 8g wafer head screws. When adjusting the clip for depth. 3mm rubber must remain between the underside of the steel spacer head and the furring channel. The Furring channels are clipped horizontally into the Mounts. Joints must be made as close as possible to the clips.

Plasterboard Lining

NB: The installer must look for the Product Identification Code on the face paper to ensure the correct board type is installed. Refer to the Face Paper Product Identification Code table on this page.

Framing Side: Two layers of EPB® Plasterboard as per specified system above, fixed vertically. Vertical joints of outer layer should be offset by 600mm from those of the inner layer. All sheet joints must be fixed over steel framing.

Resilient Mount Side: Two layers of EPB® Plasterboard as per specified system above, fixed vertically on the furring channel. Vertical joints of outer layer should be offset by 600mm from those of the inner layer.

Use full height sheets where possible. The inner layers are fixed hard to the floor. Sheet end butt joints must be formed over nogs or furring channels and offset the outer layer joints from the inner layer.

Sheets shall be touch fitted.

Fixing of Linings

Fasteners (As per Specified System Above)

System Number	Furring Channel Side		Framing Side	
	1st Layer	2nd Layer	1st Layer	2nd Layer
	Self-Tapping Drywall Screws			
E4SMA90-M46	13mm	10mm	13mm	10mm
	25 x 6g	41 x 6g	25 x 6g	41 x 6g
E4SMA90-M52	13mm	13mm	13mm	13mm
	25 x 6g	41 x 6g	25 x 6g	41 x 6g

Fastener Centres

Framing Side: Fix at 300mm centres up each stud with no fixing to top or bottom channel sections.

Place fasteners no closer than 12mm to the sheet edge and 50mm from sheet ends.

Resilient Mount Side: Fix 300mm centres along each furring channel. Place fasteners minimum 12mm from sheet edges and sheet ends.

Place fasteners at 200mm centres where sheet end butt joints occur.

Avoid outer layer screws from hitting inner layer screws.

Acoustic Sealant

A bead of acoustical sealant is required around the perimeter of the inner layer and the outer layer is bedded onto the bead. The perimeter junctions of the wall must be airtight.

Jointing

Inner Layer: Unstopped

Outer Layer: All fastener heads stopped and all sheet joints reinforced with paper jointing tape and stopped. Wall to ceiling junctions are to be reinforced with paper tape and square stopped or finished with Cornice. All in accordance with EPB® Plasterboard Installation Guide.

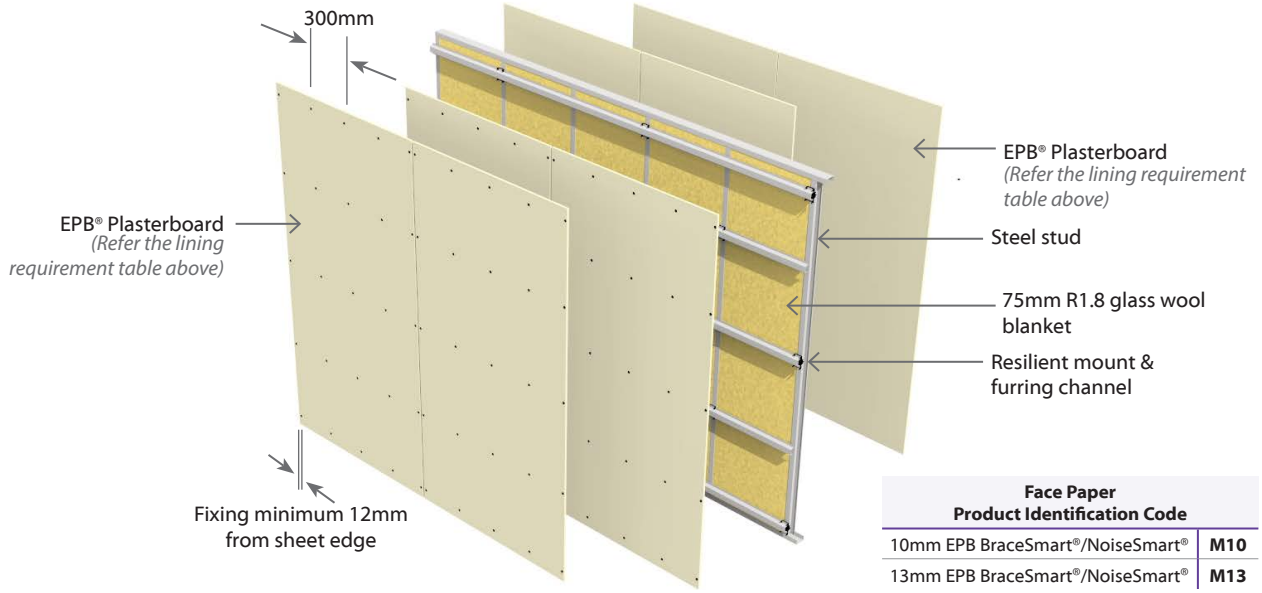

Face Paper Product Identification Code	
10mm EPB BraceSmart®/NoiseSmart®	M10
13mm EPB BraceSmart®/NoiseSmart®	M13

E4SRA60 Steel Frame with Resilient Rail | Non Load Bearing | Two Way FRR

4 Layers: 2 Layers of Plasterboard to Framing side & 2 Layers of Plasterboard on Rail side | Full Intertenancy **A**coustic

System Number	Lining Suffix	FRR	Load Bearing Ability	Noise Control		Lining Requirement
				STC	Rw	
E4SRA60	-S52	-/60/60	NLB	55	54	Frame Side: 2 x 13mm EPB® Standard Rail Side: 2 x 13mm EPB® Standard
	-M40	-/60/60	NLB	56	55	Frame Side: 2 x 10mm EPB BraceSmart®/NoiseSmart® Rail Side: 2 x 10mm EPB BraceSmart®/NoiseSmart®

Framing

Steel studs with minimum dimensions 64mm x 34mm x 0.55 BMT with 6mm return. Tracks to be minimum size 64mm x 30mm x 0.55 BMT and are fixed to floor and ceiling in true alignment. Studs are placed at 600mm centres maximum. Studs are placed with a 15mm expansion gap at top of frame. The studs are not directly fixed to the tracks. The studs are held in place by the grip of the channel runners.

No other fixing to the tracks is allowed.

Wall Heights

Recommended maximum height is 2.7m. Higher walls may be subject to specific engineering design or consult the framing manufacturer.

Partition Width

In order to achieve the STC ratings in the table above the partition width (excluding the board) shall be a minimum of 77mm.

Stud Depth	Rail	Lining Suffix	Plasterboard	Total Partition
64mm	13mm	M40	40mm	117mm
		S52	52mm	129mm

Wall Sound Absorber

Install Sound Absorber between studs of the frame. Use 75mm thick R1.8 glass wool blanket.

Acoustic Resilient Rail

The resilient Rail shall be fixed to the studs at 600mm centres using 32mm x 8g wafer head self tapping screws through the base flange and into each stud. The base flange to face downwards and resilient edge upwards. Rails may be joined over the studs by nesting together with no more than 20mm overlap. Fasten through both channels into stud. Highest resilient channel shall be fixed no more than 75mm from the ceiling line and the lowest channel, 50mm from the floor line.

Plasterboard Lining

NB: The installer must look for the Product Identification Code on the face paper to ensure the correct board type is installed. Refer to the Face Paper Product Identification Code table on this page.

Framing Side: Two layers of EPB® Plasterboard lining fixed vertically. Vertical joints of outer layer should be offset by 600mm from those of the inner layer. All sheet joints must be fixed over steel framing.

Resilient Rail Side: Two layers fixed vertically on the furring channel. Vertical joints of outer layer should be offset by 600mm from those of the inner layer.

Use full height sheets where possible. The inner layers are fixed hard to the floor. Sheet end butt joints must be formed over nogs or rails and offset the outer layer joints from the inner layer.

Sheets shall be touch fitted.

Fixing of Linings

Fasteners (As per Specified System Above)

System Number	Resilient Rail Side		Framing Side	
	1st Layer	2nd Layer	1st Layer	2nd Layer
	Self-Tapping Drywall Screws			
E4SRA60-M40	10mm	10mm	10mm	10mm
	25 x 6g	32 x 6g	25 x 6g	32 x 6g
E4SRA60-S52	13mm	13mm	13mm	13mm
	25 x 6g	41 x 6g	25 x 6g	41 x 6g

Fastener Centres

Framing Side: Fix at 300mm centres up each stud with no fixing to top or bottom track sections. Place fasteners no closer than 12mm to the sheet edge and 50mm from sheet ends.

Resilient Rail Side: Fix 300mm centres along each resilient rail.

Place fasteners minimum 12mm from sheet edges and sheet ends.

Place fasteners at 200mm centres where sheet end butt joints occur.

Avoid outer layer screws from hitting inner layer screws.

Lining screws to be fastened to the side of the studs and to ensure that they don't penetrate or touch the framing.

Acoustic Sealant

A bead of acoustical sealant is required around the perimeter of the inner layer and the outer layer is bedded onto the bead. The perimeter junctions of the wall must be airtight.

Jointing

Inner Layer: Unstopped

Outer Layer: All fastener heads stopped and all sheet joints reinforced with paper jointing tape and stopped. Wall to ceiling junctions are to be reinforced with paper tape and square stopped or finished with Cornice. All in accordance with the EPB® Plasterboard Installation Guide.

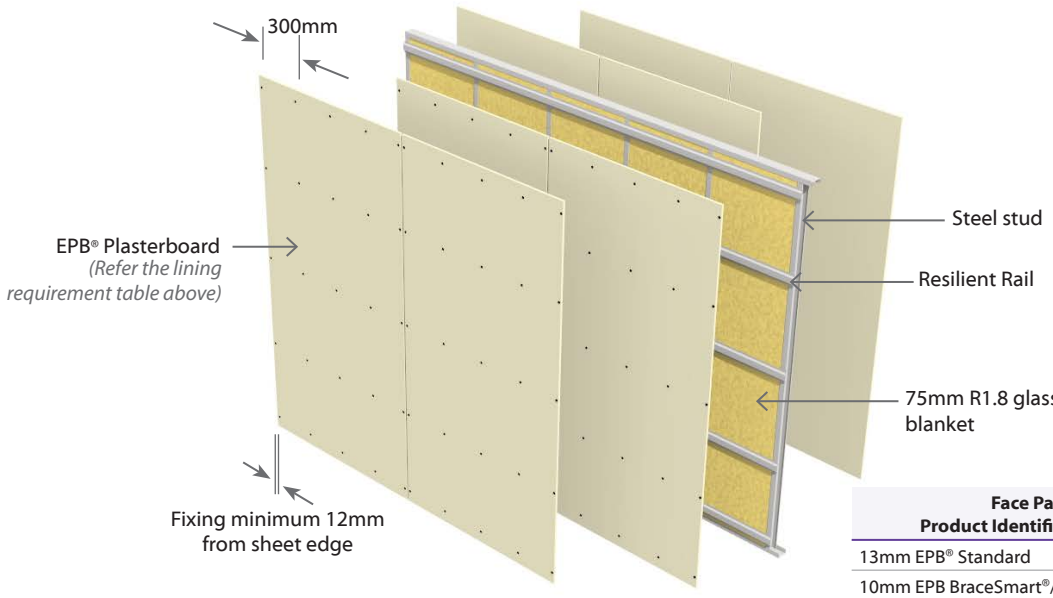

Face Paper Product Identification Code	
13mm EPB® Standard	S13
10mm EPB BraceSmart®/NoiseSmart®	M10

E4SRA90 | **S**teel Frame with Resilient **R**ail | Non Load Bearing | Two Way FRR

4 Layers: 2 Layers of Plasterboard to Framing side & 2 Layers of Plasterboard on Rail side | Full Intertenancy **A**coustic

System Number	Lining Suffix	FRR	Load Bearing Ability	Noise Control		Lining Requirement
				STC	Rw	
E4SRA90	**-M46**	-/90/90	NLB	57	56	Frame Side: 1 x 10mm and 1 x 13mm EPB BraceSmart®/NoiseSmart® Rail Side: 1 x 10mm and 1 x 13mm EPB BraceSmart®/NoiseSmart®
	-F52	-/90/90	NLB	57	56	Frame Side: 2 x 13mm EPB FireSmart® Rail Side: 2 x 13mm EPB FireSmart®
	-M52	-/90/90	NLB	59	58	Frame Side: 2 x 13mm EPB BraceSmart®/NoiseSmart® Rail Side: 2 x 13mm EPB BraceSmart®/NoiseSmart®

Framing

Steel studs with minimum dimensions 64mm x 34mm x 0.55 BMT with 6mm return. Tracks to be minimum size 64mm x 30mm x 0.55 BMT and are fixed to floor and ceiling in true alignment. Studs are placed at 600mm centres maximum. Studs are placed with a 15mm expansion gap at top of frame. The studs are not directly fixed to the tracks. The studs are held in place by the grip of the channel runners.

No other fixing to the tracks is allowed.

Wall Heights

Recommended maximum height is 2.7m. Higher walls may be subject to specific engineering design or consult the framing manufacturer.

Partition Width

In order to achieve the STC ratings in the table above the partition width (excluding the board) shall be a minimum of 77mm.

Stud Depth	Rail	Lining Suffix	Plasterboard	Total Partition
64mm	13mm	**M46**	46mm	123mm
		F52, M52	52mm	129mm

Wall Sound Absorber

Install Sound Absorber between studs of the frame. Use 75mm thick R1.8 glass wool blanket.

Acoustic Resilient Rail

The resilient Rail shall be fixed to the studs at 600mm centres using 32mm x 8g wafer head self tapping screws through the base flange and into each stud. The base flange to face downwards and resilient edge upwards. Rails may be joined over the studs by nesting together with no more than 20mm overlap. Fasten through both channels into stud. Highest resilient channel shall be fixed no more than 75mm from the ceiling line and the lowest channel, 50mm from the floor line.

Plasterboard Lining

NB: The installer must look for the Product Identification Code on the face paper to ensure the correct board type is installed. Refer to the Face Paper Product Identification Code table on this page.

Framing Side: Two layers of EPB® Plasterboard as per specified system above, fixed vertically. Vertical joints of outer layer should be offset by 600mm from those of the inner layer. All sheet joints must be fixed over steel framing.

Resilient Rail Side: Two layers of EPB® Plasterboard as per specified system above, fixed vertically on the furring channel. Vertical joints of outer layer should be offset by 600mm from those of the inner layer.

Use full height sheets where possible. The inner layers are fixed hard to the floor. Sheet end butt joints must be formed over nogs or rails and offset the outer layer joints from the inner layer.

Sheets shall be touch fitted.

Fixing of Linings

Fasteners (As per Specified System Above)

System Number	Resilient Rail Side		Framing Side	
	1st Layer	2nd Layer	1st Layer	2nd Layer
	Self-Tapping Drywall Screws			
E4SRA90-M46	10mm	13mm	10mm	13mm
	25 x 6g	41 x 6g	25 x 6g	41 x 6g
E4SRA90-F52 E4SRA90-M52	13mm	13mm	13mm	13mm
	25 x 6g	41 x 6g	25 x 6g	41 x 6g

Fastener Centres

Framing Side: Fix at 300mm centres up each stud with no fixing to top or bottom track sections.

Place fasteners no closer than 12mm to the sheet edge and 50mm from sheet ends.

Resilient Rail Side: Fix 300mm centres along each resilient rail.

Place fasteners minimum 12mm from sheet edges and sheet ends. Place fasteners at 200mm centres where sheet end butt joints occur. Avoid outer layer screws from hitting inner layer screws. Lining screws to be fastened to the side of the studs and to ensure that they don't penetrate or touch the framing.

Acoustic Sealant

A bead of acoustical sealant is required around the perimeter of the inner layer and the outer layer is bedded onto the bead. The perimeter junctions of the wall must be airtight.

Jointing

Inner Layer: Unstopped

Outer Layer: All fastener heads stopped and all sheet joints reinforced with paper jointing tape and stopped. Wall to ceiling junctions are to be reinforced with paper tape and square stopped or finished with Cornice. All in accordance with the EPB® Plasterboard Installation Guide.

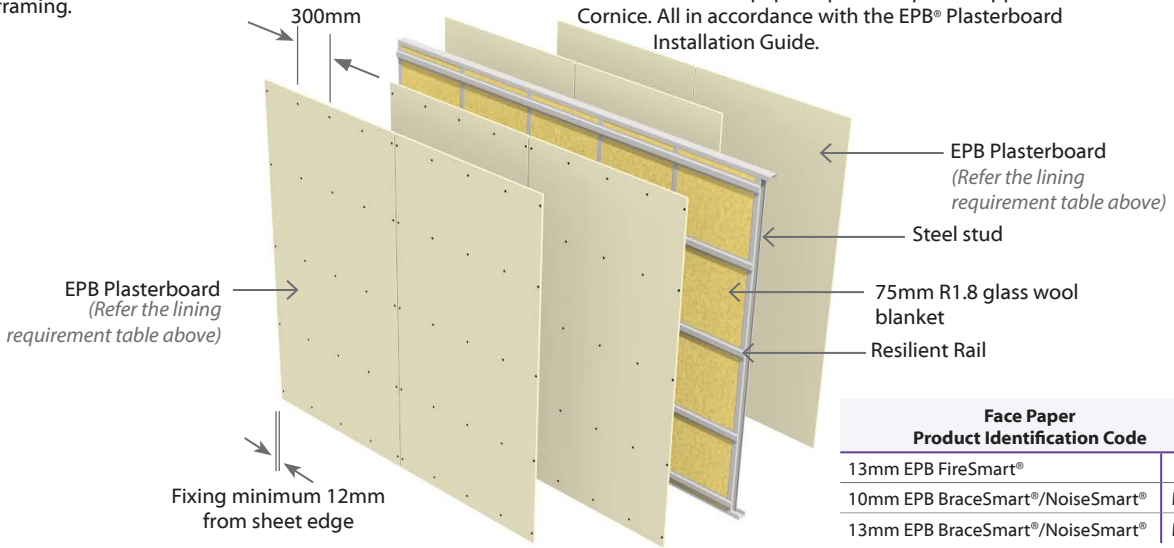

Face Paper Product Identification Code	
13mm EPB FireSmart®	**F13**
10mm EPB BraceSmart®/NoiseSmart®	**M10**
13mm EPB BraceSmart®/NoiseSmart®	**M13**

E4SQA30 Quiet Steel Frame | Non Load Bearing | Two Way FRR

4 Layers: 2 Layers of Plasterboard to each side of frame | Full Intertenancy **A**coustic

System Number	Lining Suffix	FRR	Load Bearing Ability	Noise Control		Lining Requirement
				STC	Rw	
E4SQA30	**-F40**	-/30/30	NLB	55	54	2 x 10mm EPB FireSmart® each side

Framing

Quiet Steel Frame – Tracks to be 92mm x 30mm x 0.55 BMT and are fixed to floor and ceiling. Quiet Steel studs 92mm x 42mm x 0.55 BMT are friction fitted and placed at max 600mm centres with a minimum 15mm expansion gap at top of frame.

No fixings to the top track allowed.

Wall Heights

Recommended maximum height is 3.6m. Higher walls may be subject to specific engineering design or consult the framing manufacturer.

Partition Width

In order to achieve the STC ratings in the table above the partition width (excluding the board) shall be a minimum of 92mm.

Stud Depth	Lining Suffix	Plasterboard	Total Partition
92mm	**S40**	40mm	132mm

Wall Sound Absorber

Install Sound Absorber between studs of the frame. Use 90mm thick R2.2 glass wool blanket.

Plasterboard Lining

NB: The installer must look for the Product Identification Code on the face paper to ensure the correct board type is installed. Refer to the Face Paper Product Identification Code table on this page.

Two layers of 10mm EPB FireSmart® lining fixed to each side of the Quiet steel framing.

Vertical fixing only permitted. Use full height sheets where possible. Inner layer joints on opposite side of frame are offset. All sheet joints must be fixed over steel framing.

Vertical joints of the outer layer should be offset by minimum 400mm from those of the inner layer.

Sheet end butt joints must be formed over nogs and offset the outer layer joints from the inner layer.

The inner layers are fixed hard to the floor. Sheets shall be touch fitted.

Acoustic Sealant

A bead of acoustical sealant is required around the perimeter of the inner layer and the outer layer is bedded onto the bead. The perimeter junctions of the wall must be airtight.

Fixing of Linings

Fasteners

System Number	Side One		Side Two	
	1st Layer	2nd Layer	1st Layer	2nd Layer
	Self-Tapping Drywall Screws			
E4SQA30-F40	10mm	10mm	10mm	10mm
	25 x 6g	32 x 6g	25 x 6g	32 x 6g

Fastener Centres

Inner Layer: Fix at 300mm centres up all studs.

Outer Layer: Fix at 300mm centres up all studs.

Place fasteners no closer than 12mm to the sheet edge and 50mm from sheet ends.

Place fasteners at 200mm centres where sheet end butt joints occur.

Avoid outer layer screws from hitting inner layer screws.

Jointing

Inner Layer: Unstopped

Outer Layer: All fastener heads stopped and all sheet joints reinforced with paper jointing tape and stopped. Wall to ceiling junctions are to be reinforced with paper tape and square stopped or finished with Cornice. All in accordance with EPB® Plasterboard Installation Guide.

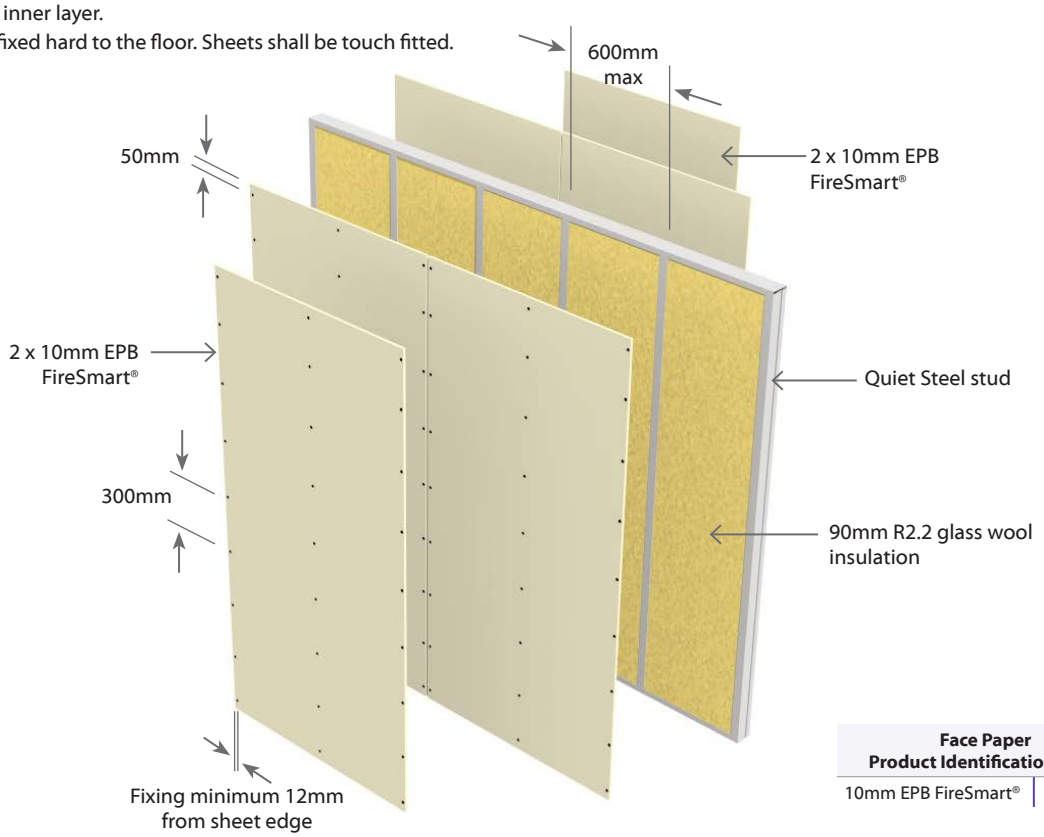

Face Paper Product Identification Code	
10mm EPB FireSmart®	**F10**

E4SQA45 Quiet Steel Frame | Non Load Bearing | Two Way FRR

4 Layers: 2 Layers of Plasterboard to each side of frame | Full Intertenancy **A**coustic

System Number	Lining Suffix	FRR	Load Bearing Ability	Noise Control		Lining Requirement
				STC	Rw	
E4SQA45	**-S46**	-/45/45	NLB	56	55	1x 10mm EPB® Standard & 1 x 13mm EPB® Standard each side

Framing

Quiet Steel Frame – Tracks to be 92mm x 30mm x 0.55 BMT and are fixed to floor and ceiling. Quiet Steel studs 92mm x 42mm x 0.55 BMT are friction fitted and placed at max 600mm centres with a minimum 15mm expansion gap at top of frame.

No fixings to the top track allowed.

Wall Heights

Recommended maximum height is 3.6m. Higher walls may be subject to specific engineering design or consult the framing manufacturer.

Partition Width

In order to achieve the STC ratings in the table above the partition width (excluding the board) shall be a minimum of 92mm.

Stud Depth	Lining Suffix	Plasterboard	Total Partition
92mm	**S46**	46mm	138mm

Wall Sound Absorber

Install Sound Absorber between studs of the frame. Use 90mm thick R2.2 glass wool blanket.

Plasterboard Lining

NB: The installer must look for the Product Identification Code on the face paper to ensure the correct board type is installed. Refer to the Face Paper Product Identification Code table on this page.

One layer of 10mm EPB® Standard and One layer of 13mm EPB® Standard linings fixed to each side of the Quiet steel framing.

Vertical fixing only permitted. Use full height sheets where possible. Inner layer joints on opposite side of frame are offset. All sheet joints must be fixed over steel framing. Vertical joints of the outer layer should be offset by minimum 400mm from those of the inner layer. Sheet end butt joints must be formed over nogs and offset the outer layer joints from the inner layer. The inner layers are fixed hard to the floor. Sheets shall be touch fitted.

Acoustic Sealant

A bead of acoustic sealant must be placed around the perimeter of the inner layer. The outer layer is then bedded onto the bead. The perimeter junctions of the wall must be airtight.

Fixing of Linings

Fasteners

System Number	Side One		Side Two	
	1st Layer	2nd Layer	1st Layer	2nd Layer
	Self-Tapping Drywall Screws			
E4SQA45-S46	10mm	13mm	10mm	13mm
	25 x 6g	41 x 6g	25 x 6g	41 x 6g

Fastener Centres

Inner Layer: Fix at 300mm centres up all studs.

Outer Layer: Fix at 300mm centres up all studs.

Place fasteners no closer than 12mm to the sheet edge and 50mm from sheet ends.

Place fasteners at 200mm centres where sheet end butt joints occur.

Avoid outer layer screws from hitting inner layer screws.

Jointing

Inner Layer: Unstopped

Outer Layer: All fastener heads stopped and all sheet joints reinforced with paper jointing tape and stopped. Wall to ceiling junctions are to be reinforced with paper tape and square stopped or finished with Cornice. All in accordance with EPB® Plasterboard Installation Guide.

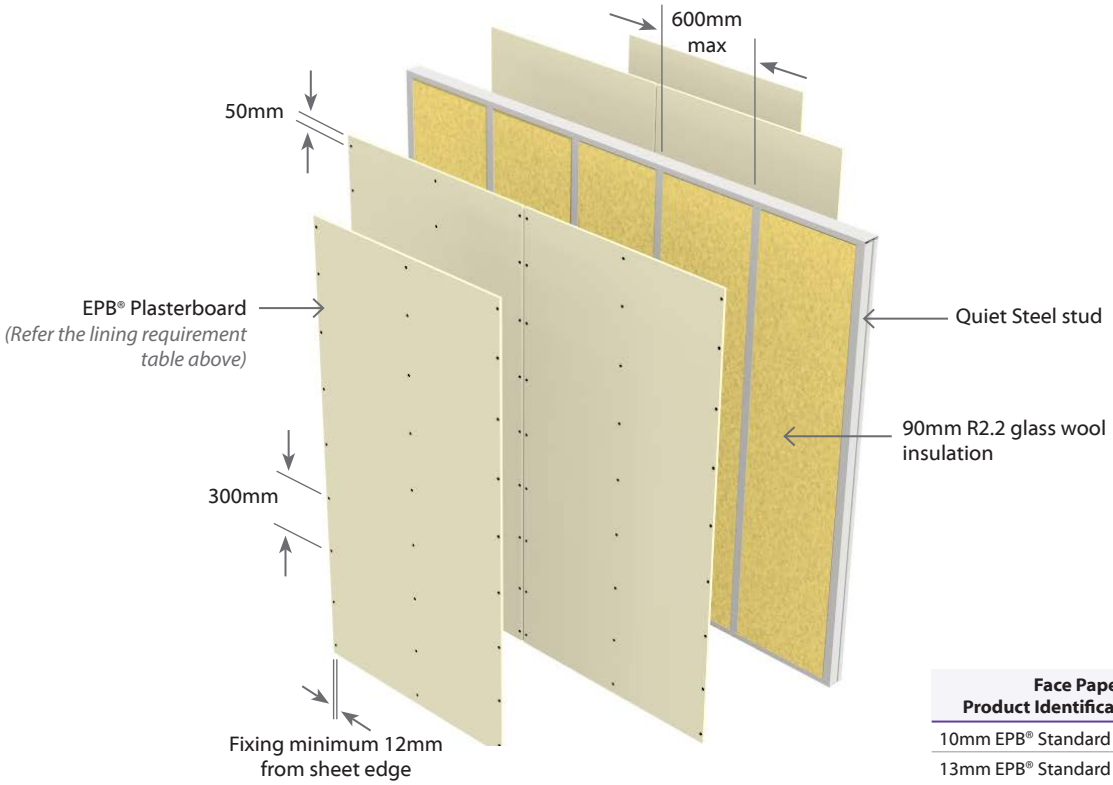

Face Paper Product Identification Code	
10mm EPB® Standard	**S10**
13mm EPB® Standard	**S13**

E3SQA60 Quiet Steel Frame

Non Load Bearing | Two Way FRR

3 Layers: 1 Layer of Plasterboard to one side of frame &
2 Layers of Plasterboard to other side of frame

Full Intertenancy Acoustic

System Number	Lining Suffix	FRR	Load Bearing Ability	Noise Control		Lining Requirement
				STC	Rw	
E3SQA60	-M33	-/60/60	NLB	55	54	1 x 13mm EPB BraceSmart®/NoiseSmart® one side 2 x 10mm EPB BraceSmart®/NoiseSmart® other side
	-M36	-/60/60	NLB	55	54	1 x 13mm EPB BraceSmart®/NoiseSmart® one side 1 x 10mm & 1 x 13mm EPB BraceSmart®/NoiseSmart® other side
	-M39	-/60/60	NLB	57	56	1 x 13mm EPB BraceSmart®/NoiseSmart® one side 2 x 13mm EPB BraceSmart®/NoiseSmart® other side

Framing

Quiet Steel Frame – Tracks to be 92mm x 30mm x 0.55 BMT and are fixed to floor and ceiling. Quiet Steel studs 92mm x 42mm x 0.55 BMT are friction fitted and placed at max 600mm centres with a minimum 15mm expansion gap at top of frame.

No fixings to the top tracks allowed.

Wall Heights

Recommended maximum height is 3.6m. Higher walls may be subject to specific engineering design or consult the framing manufacturer.

Partition Width

In order to achieve the STC ratings in the table above the partition width (excluding the board) shall be a minimum of 92mm.

Stud Depth	Lining Suffix	Plasterboard	Total Partition
92mm	M33	33mm	125mm
	M36	36mm	128mm
	M39	39mm	131mm

Wall Sound Absorber

Install Sound Absorber between studs of the frame. Use 90mm thick R2.2 glass wool blanket.

Plasterboard Lining

NB: The installer must look for the Product Identification Code on the face paper to ensure the correct board type is installed. Refer to the Face Paper Product Identification Code table on this page.

One layer of EPB® Plasterboard lining on one side and Two layers on the other side as per specified system above.

Vertical fixing only permitted. Use full height sheets where possible. Inner layer joints on opposite side of frame should be offset. All sheet joints must be fixed over steel framing. Vertical joints of the outer layer should be offset by minimum 400mm from those of the inner layer. Sheet end butt joints must be formed over nogs. The inner layers are fixed hard to the floor. Sheets shall be touch fitted.

Acoustic Sealant

A bead of acoustic sealant is required around the perimeter of the framing or the inner layer. The single or outer layer is then bedded onto the bead. The perimeter junctions of the wall must be airtight.

Fixing of Linings

Fasteners (As per Specified System Above)

System Number	Side One		Side Two
	1st Layer	2nd Layer	Single Layer
	Self-Tapping Drywall Screws		
E3SQA60-M33	10mm	10mm	13mm
	25 x 6g	32 x 6g	25 x 6g
E3SQA60-M36	13mm	10mm	13mm
	25 x 6g	41 x 6g	25 x 6g
E3SQA60-M39	13mm	13mm	13mm
	25 x 6g	41 x 6g	25 x 6g

Fastener Centres

Inner layer: Fix at 300mm centres up all studs.

Single or Outer Layer: Fix at 300mm centres up all studs.

Place fasteners 12mm from the sheet edge and 50mm from sheet ends. Place fasteners at 200mm centres where sheet end butt joints occur. Avoid outer layer screws from hitting inner layer screws.

Jointing

Inner Layer: Unstopped.

Outer or Single Layer: All fastener heads stopped and all sheet joints reinforced with paper jointing tape and stopped. Wall to ceiling junctions are to be reinforced with paper tape and square stopped or finished with Cornice. All in accordance with EPB® Plasterboard Installation Guide.

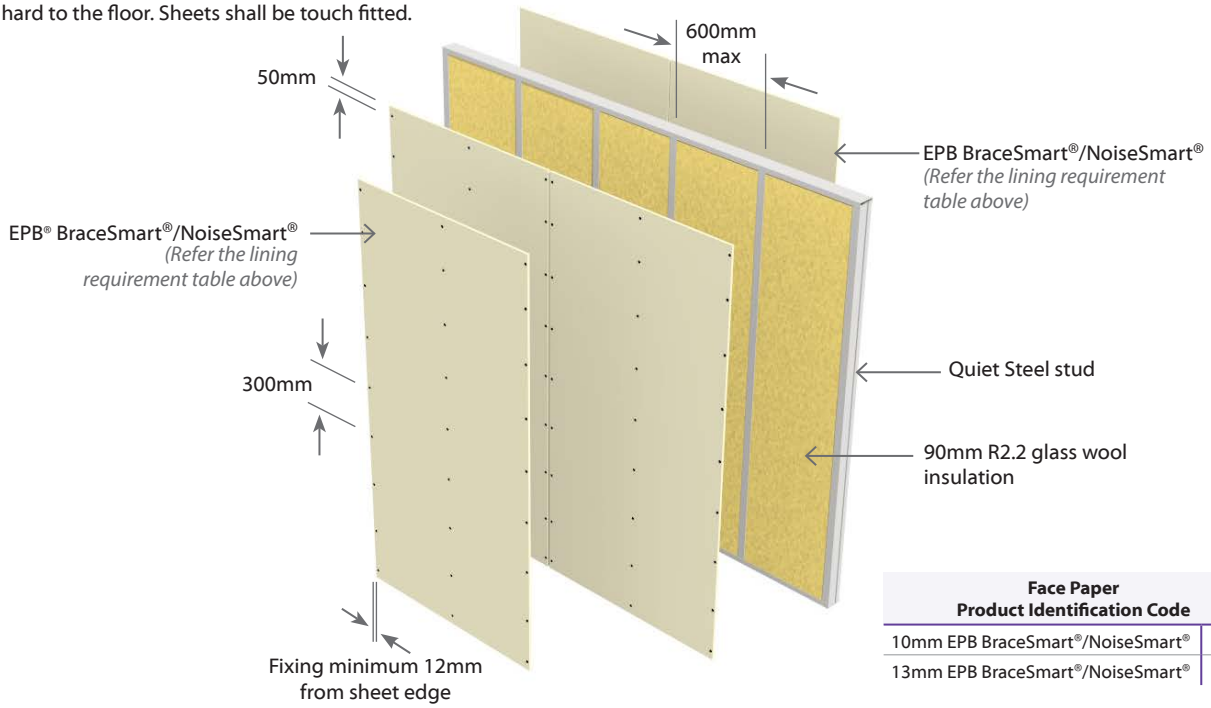

Face Paper Product Identification Code	
10mm EPB BraceSmart®/NoiseSmart®	M10
13mm EPB BraceSmart®/NoiseSmart®	M13

E4SQA60 Quiet Steel Frame | Non Load Bearing | Two Way FRR

4 Layers: 2 Layers of Plasterboard to each side of frame | Full Intertenancy **A**coustic

System Number	Lining Suffix	FRR	Load Bearing Ability	Noise Control		Lining Requirement
				STC	Rw	
E4SQA60	**-S52**	-/60/60	NLB	57	56	2 x 13mm EPB® Standard each side
	-M40	-/60/60	NLB	57	56	2 x 10mm EPB BraceSmart®/NoiseSmart® each side
	-M52	-/60/60	NLB	61	60	2 x 13mm EPB BraceSmart®/NoiseSmart® each side

Framing

Quiet Steel Frame – Tracks to be 92mm x 30mm x 0.55 BMT and are fixed to floor and ceiling. Quiet Steel studs 92mm x 42mm x 0.55 BMT are friction fitted and placed at max 600mm centres with a minimum 15mm expansion gap at top of frame.

No fixings to the top tracks allowed.

Wall Heights

Recommended maximum height is 3.6m. Higher walls may be subject to specific engineering design or consult the framing manufacturer.

Partition Width

In order to achieve the STC ratings in the table above the partition width (excluding the board) shall be a minimum of 92mm.

Stud Depth	Lining Suffix	Plasterboard	Total Partition
92mm	**S52**	52mm	144mm
	M40	40mm	132mm
	M52	52mm	144mm

Wall Sound Absorber

Install Sound Absorber between studs of the frame. Use 90mm thick R2.2 glass wool blanket.

Plasterboard Lining

NB: The installer must look for the Product Identification Code on the face paper to ensure the correct board type is installed. Refer to the Face Paper Product Identification Code table on the next page.

Two layers of EPB® Plasterboard lining on one side and Two Layers on the other side as per specified system above.

Vertical fixing only permitted. Use full height sheets where possible. Inner layer joints on opposite side of frame should be offset. Vertical sheet joints must be fixed over framing. Vertical joints of the outer layer should be offset by minimum 400mm from those of the inner layer.

System Number	**Framing requirements for Horizontal butt joints**
E4SQA60-S52 E4SQA60-M40	Horizontal sheet end butt joints must be formed over nogs
E4SQA60-M52	Horizontal sheet end butt joints do not need to be formed over nogs provided that the inner layer is offset by minimum 200mm from the outer layer butt joints.

The horizontal butt edge of the upper sheet should sit square on the horizontal butt edge of the lower sheet.

The inner layers are fixed hard to the floor.

Sheets shall be touch fitted.

Acoustic Sealant

A bead of acoustical sealant is required around the perimeter of the inner layer and the outer layer is bedded onto the bead. The perimeter junctions of the wall must be airtight.

Fixing of Linings

Fasteners (As per Specified System Above)

System Number	Side One		Side Two	
	1st Layer	2nd Layer	1st Layer	2nd Layer
	Self-Tapping Drywall Screws			
E4SQA60-S52	13mm	13mm	13mm	13mm
	25 x 6g	41 x 6g	25 x 6g	41 x 6g
E4SQA60-M40	10mm	10mm	10mm	10mm
	25 x 6g	32 x 6g	25 x 6g	32 x 6g
E4SQA60-M52	13mm	13mm	13mm	13mm
	25 x 6g	41 x 6g	25 x 6g	41 x 6g

Fastener Centres

Inner Layer: Fix at 300mm centres up all studs.

Outer Layer: Fix at 300mm centres up all studs.

Place fasteners no closer than 12mm to the sheet edge and 50mm from sheet ends. Place fasteners at 200mm centres where sheet end butt joints occur over nogs. Avoid outer layer screws from hitting inner layer screws.

Jointing

Inner Layer: Unstopped

Outer Layer: All fastener heads stopped and all sheet joints reinforced with paper jointing tape and stopped. Wall to ceiling junctions are to be reinforced with paper tape and square stopped or finished with Cornice. All in accordance with EPB® Plasterboard Installation Guide.

E4SQA60 Quiet Steel Frame | Non Load Bearing | Two Way FRR

4 Layers: 2 Layers of Plasterboard to each side of frame | Full Intertenancy **A**coustic

System Number	Lining Suffix	FRR	Load Bearing Ability	Noise Control		Lining Requirement
				STC	Rw	
E4SQA60	**-S52**	-/60/60	NLB	57	56	2 x 13mm EPB® Standard each side
	-M40	-/60/60	NLB	57	56	2 x 10mm EPB BraceSmart®/NoiseSmart® each side
	-M52	-/60/60	NLB	61	60	2 x 13mm EPB BraceSmart®/NoiseSmart® each side

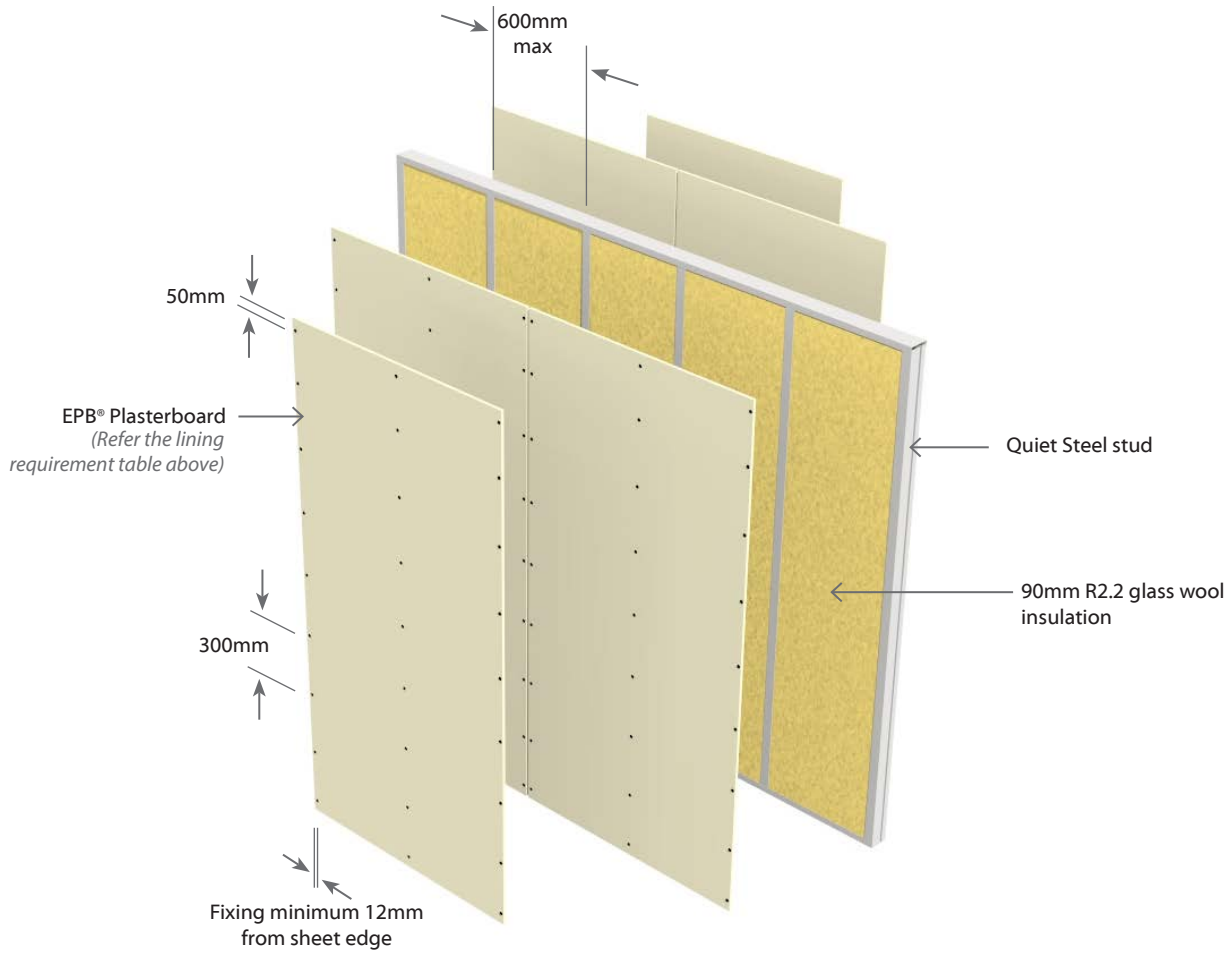

Face Paper Product Identification Code	
13mm EPB® Standard	**S13**
10mm EPB BraceSmart®/NoiseSmart®	**M10**
13mm EPB BraceSmart®/NoiseSmart®	**M13**

E4SQA75 Quiet Steel Frame | Non Load Bearing | Two Way FRR

4 Layers: 2 Layers of Plasterboard to each side of frame | Full Intertenancy Acoustic

System Number	Lining Suffix	FRR	Load Bearing Ability	Noise Control		Lining Requirement
				STC	Rw	
E4SQA75	**-MS52**	-/75/75	NLB	59	58	1 x 13mm EPB BraceSmart®/NoiseSmart® And 1 x 13mm EPB® Standard each side

Framing

Quiet Steel Frame – Tracks to be 92mm x 30mm x 0.55 BMT and are fixed to floor and ceiling. Quiet Steel studs 92mm x 42mm x 0.55 BMT are friction fitted and placed at max 600mm centres with a minimum 15mm expansion gap at top of frame.

No fixings to the top tracks allowed.

Wall Heights

Recommended maximum height is 3.6m. Higher walls may be subject to specific engineering design or consult the framing manufacturer.

Partition Width

In order to achieve the STC ratings in the table above the partition width (excluding the board) shall be a minimum of 92mm.

Stud Depth	Lining Suffix	Plasterboard	Total Partition
92mm	**MS52**	52mm	144mm

Wall Sound Absorber

Install Sound Absorber between studs of the frame. Use 90mm thick R2.2 glass wool blanket.

Plasterboard Lining

NB: The installer must look for the Product Identification Code on the face paper to ensure the correct board type is installed. Refer to the Face Paper Product Identification Code table on this page.

One layer of 13mm EPB BraceSmart®/NoiseSmart® and One layer of 13mm EPB® Standard linings fixed to each side of the Quiet steel framing.

Vertical fixing only permitted. Use full height sheets where possible. Inner layer joints on opposite side of frame are offset. All sheet joints must be fixed over steel framing. Vertical joints of the outer layer should be offset by minimum 400mm from those of the inner layer.

Sheet end butt joints must be formed over nogs and offset the outer layer joints from the inner layer. The inner layers are fixed hard to the floor. Sheets shall be touch fitted.

Acoustic Sealant

A bead of acoustical sealant is required around the perimeter of the inner layer and the outer layer is bedded onto the bead. The perimeter junctions of the wall must be airtight.

Fixing of Linings

Fasteners

System Number	Side One		Side Two	
	1st Layer	2nd Layer	1st Layer	2nd Layer
	Self-Tapping Drywall Screws			
E4SQA75-MS52	13mm	13mm	13mm	13mm
	25 x 6g	41 x 6g	25 x 6g	41 x 6g

Fastener Centres

Inner Layer: Fix at 300mm centres up all studs.

Outer Layer: Fix at 300mm centres up all studs.

Place fasteners no closer than 12mm to the sheet edge and 50mm from sheet ends.

Place fasteners at 200mm centres where sheet end butt joints occur.

Avoid outer layer screws from hitting inner layer screws.

Jointing

Inner Layer: Unstopped

Outer Layer: All fastener heads stopped and all sheet joints reinforced with paper jointing tape and stopped. Wall to ceiling junctions are to be reinforced with paper tape and square stopped or finished with Cornice. All in accordance with EPB® Plasterboard Installation Guide.

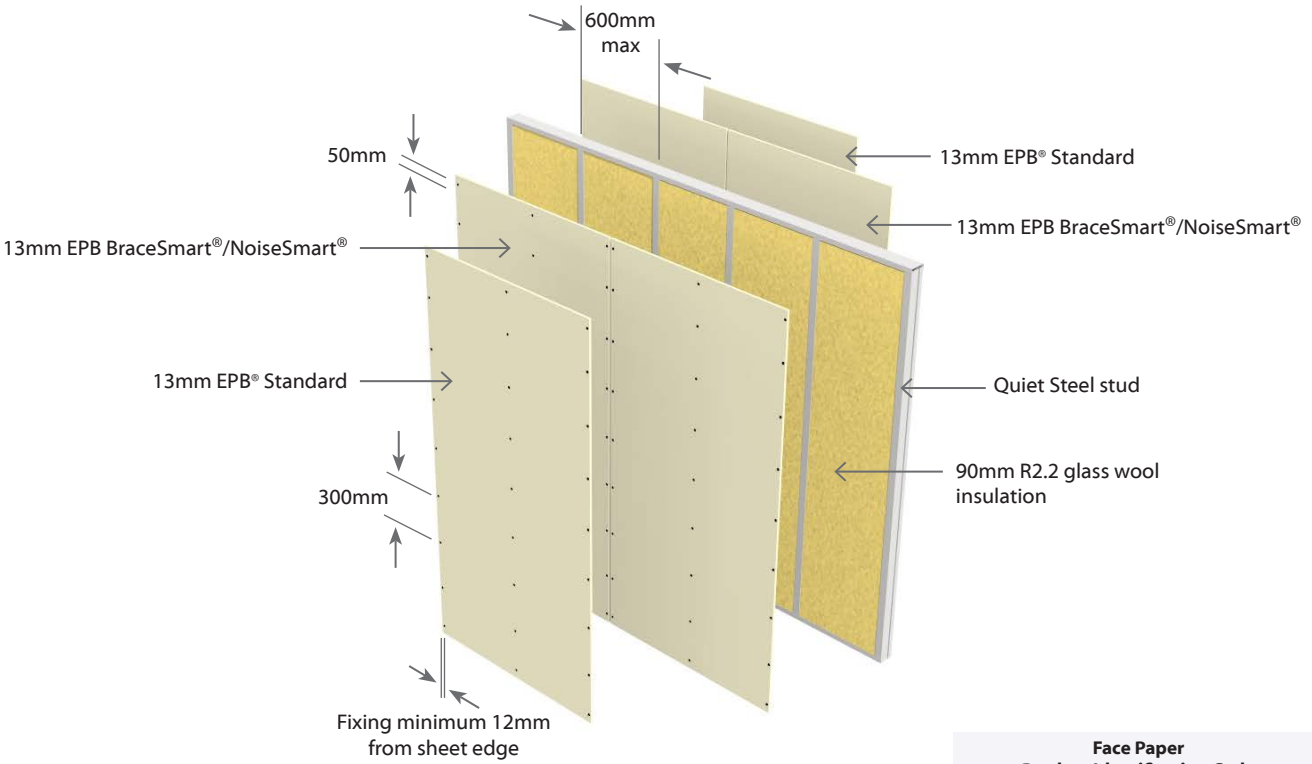

Face Paper Product Identification Code	
13mm EPB®Standard	**S13**
13mm EPB BraceSmart®/NoiseSmart®	**M13**

E4SQA90 Quiet Steel Frame | Non Load Bearing | Two Way FRR

4 Layers: 2 Layers of Plasterboard to each side of frame | Full Intertenancy **A**coustic

System Number	Lining Suffix	FRR	Load Bearing Ability	Noise Control		Lining Requirement
				STC	Rw	
E4SQA90	-M46	-/90/90	NLB	59	58	1 x 10mm And 1 x 13mm EPB BraceSmart®/NoiseSmart® each side
	-M52	-/90/90	NLB	61	60	2 x 13mm EPB BraceSmart®/NoiseSmart® each side

Framing

Quiet Steel Frame – Tracks to be 92mm x 30mm x 0.55 BMT and are fixed to floor and ceiling. Quiet Steel studs 92mm x 42mm x 0.55 BMT are friction fitted and placed at max 600mm centres with a minimum 15mm expansion gap at top of frame.

No fixings to the top tracks allowed.

Wall Heights

Recommended maximum height is 3.6m. Higher walls may be subject to specific engineering design or consult the framing manufacturer.

Partition Width

In order to achieve the STC ratings in the table above the partition width (excluding the board) shall be a minimum of 92mm.

Stud Depth	Lining Suffix	Plasterboard	Total Partition
92mm	M46	46mm	138mm
	M52	52mm	144mm

Wall Sound Absorber

Install Sound Absorber between studs of the frame. Use 90mm thick R2.2 glass wool blanket.

Plasterboard Lining

NB: The installer must look for the Product Identification Code on the face paper to ensure the correct board type is installed. Refer to the Face Paper Product Identification Code table on this page.

Two layers of EPB® Plasterboard as per specified system above, fixed to each side of the Quiet steel framing.

Vertical fixing only permitted. Use full height sheets where possible. Inner layer joints on opposite side of frame are offset. All sheet joints must be fixed over steel framing. Vertical joints of the outer layer should be offset by minimum 400mm from those of the inner layer.

Sheet end butt joints must be formed over nogs and offset the outer layer joints from the inner layer. The inner layers are fixed hard to the floor. Sheets shall be touch fitted.

Acoustic Sealant

A bead of acoustical sealant is required around the perimeter of the inner layer and the outer layer is bedded onto the bead. The perimeter junctions of the wall must be airtight.

Fixing of Linings

Fasteners (As per Specified System Above)

System Number	Side One		Side Two	
	1st Layer	2nd Layer	1st Layer	2nd Layer
	Self-Tapping Drywall Screws			
E4SQA90-M46	10mm	13mm	10mm	13mm
	25 x 6g	41 x 6g	25 x 6g	41 x 6g
E4SQA90-M52	13mm	13mm	13mm	13mm
	25 x 6g	41 x 6g	25 x 6g	41 x 6g

Fastener Centres

Inner Layer: Fix at 300mm centres up all studs.

Outer Layer: Fix at 300mm centres up all studs.

Place fasteners no closer than 12mm to the sheet edge and 50mm from sheet ends.

Place fasteners at 200mm centres where sheet end butt joints occur.

Avoid outer layer screws from hitting inner layer screws.

Jointing

Inner Layer: Unstopped

Outer Layer: All fastener heads stopped and all sheet joints reinforced with paper jointing tape and stopped. Wall to ceiling junctions are to be reinforced with paper tape and square stopped or finished with Cornice. All in accordance with EPB® Plasterboard Installation Guide.

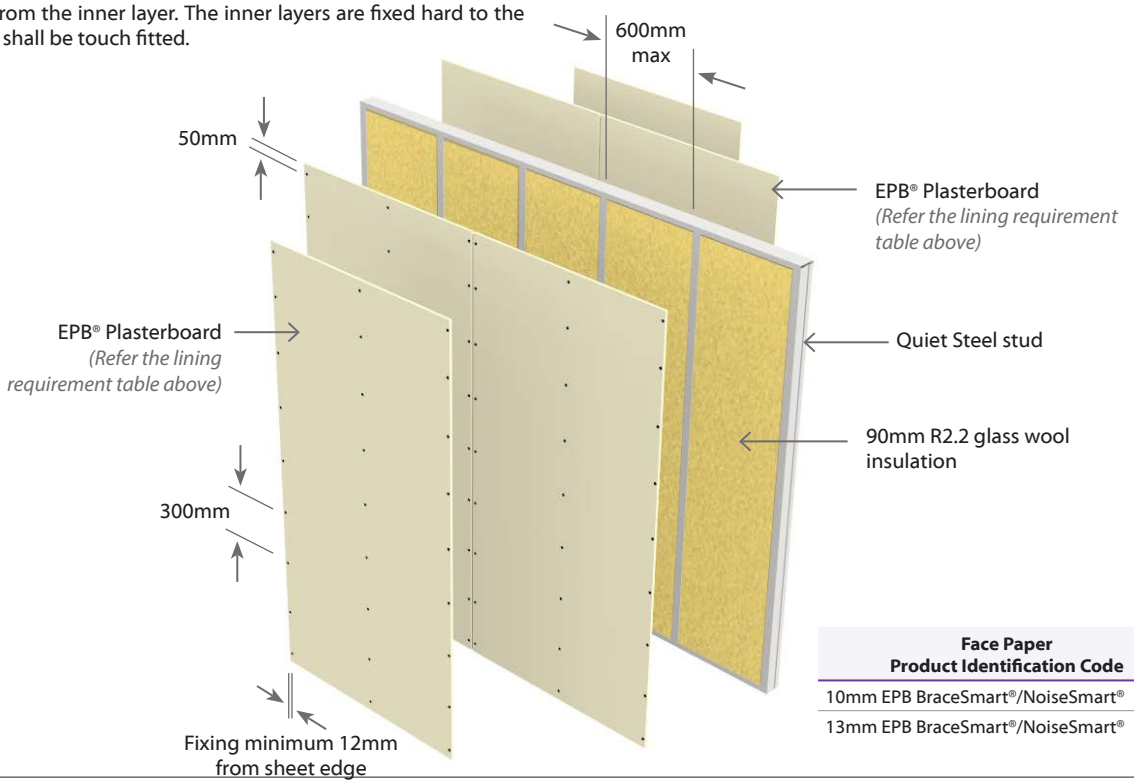

Face Paper Product Identification Code	
10mm EPB BraceSmart®/NoiseSmart®	M10
13mm EPB BraceSmart®/NoiseSmart®	M13

E3SSA30 Staggered Steel Frame | Non Load Bearing | Two Way FRR

3 Layers: 1 Layer of Plasterboard to one side of frame &
2 Layers of Plasterboard to other side of frame

Full Intertenancy **A**coustic

System Number	Lining Suffix	FRR	Load Bearing Ability	Noise Control		Lining Requirement
				STC	Rw	
E3SSA30	**-S39**	-/30/30	NLB	55	54	1 x 13mm EPB® Standard one side 2 x 13mm EPB® Standard other side

Framing

Staggered Steel Frame – Track to be a minimum size of 92mm x 30mm x 0.55 BMT and are fixed to floor and ceiling. Steel studs with minimum dimensions 64 x 34 x 0.55 mm BMT with 6mm return.

Stud to be fixed to the tracks using Staggered Stud Clip and placed at 600mm centres with a 15mm expansion gap at top of frame. Studs to be offset 300mm centres.

No other fixings to the track allowed.

Wall Heights

Recommended maximum height is 2.4m. Higher walls may be subject to specific engineering design or consult the framing manufacturer.

Partition Width

In order to achieve the STC ratings in the table above the partition width (excluding the board) shall be a minimum of 92mm.

Track Depth	Lining Suffix	Plasterboard	Total Partition
92mm	**S39**	39mm	131mm

Wall Sound Absorber

Install Sound Absorber between studs of the frame. Use 75mm thick R1.8 glass wool blanket. Split 600mm wide blankets into 300mm.

Plasterboard Lining

NB: The installer must look for the Product Identification Code on the face paper to ensure the correct board type is installed. Refer to the Face Paper Product Identification Code table on this page.

One layer of 13mm EPB® Standard lining on one side and Two layers of 13mm EPB® Standard linings fixed to the other side of the Staggered steel framing.

Vertical fixing only permitted. Use full height sheets where possible. All sheet joints must be fixed over steel framing. Vertical joints of the outer layer should be offset by 600mm from those of the inner layer. Sheet end butt joints must be formed over nogs and offset the outer layer joints from the inner layer. The inner layers are fixed hard to the floor. Sheets shall be touch fitted.

Fixing of Linings

Fasteners

System Number	Side One		Side Two
	1st Layer	2nd Layer	Single Layer
	Self-Tapping Drywall Screws		
E3SSA30-S39	13mm	13mm	13mm
	25 x 6g	41 x 6g	25 x 6g

Fastener Centres

Inner layer: Fix at 600mm centres up all studs.

Single or Outer Layer: Fix at 300mm centres up all studs.

Place fasteners minimum 12mm from the sheet edge and 50mm from sheet ends

Place fasteners at 200mm centres where sheet end butt joints occur.

Avoid outer layer screws from hitting inner layer screws.

Acoustic Sealant

A bead of acoustic sealant is required around the perimeter of the framing or the inner layer. The single or outer layer is then bedded onto the bead. The perimeter junctions of the wall must be airtight.

Jointing

Inner Layer: Unstopped

Outer or Single Layer: All fastener heads stopped and all sheet joints reinforced with paper jointing tape and stopped. Wall to ceiling junctions are to be reinforced with paper tape and square stopped or finished with Cornice. All in accordance with EPB® Plasterboard Installation Guide.

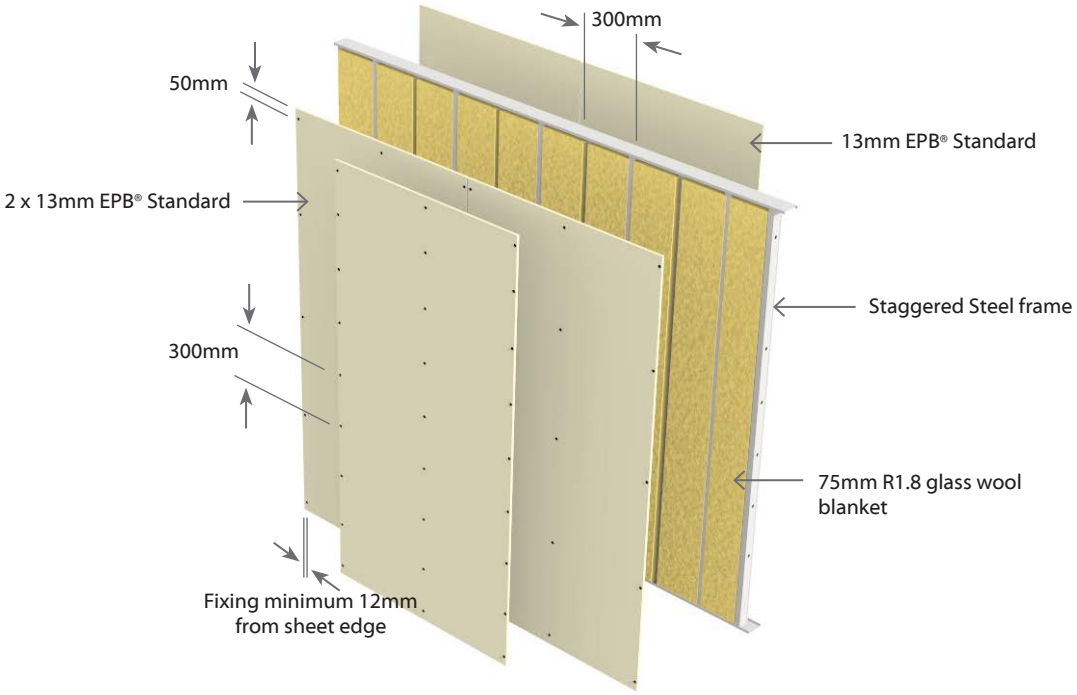

Face Paper Product Identification Code	
13mm EPB® Standard	**S13**

E4SSA45 Staggered Steel Frame | Non Load Bearing | Two Way FRR

4 Layers: 2 Layers of Plasterboard to each side of frame | Full Intertenancy **A**coustic

System Number	Lining Suffix	FRR	Load Bearing Ability	Noise Control		Lining Requirement
				STC	Rw	
E4SSA45	**-F40**	-/45/45	NLB	56	55	2 x 10mm EPB FireSmart® each side

Framing

Staggered Steel Frame – Tracks to be a minimum size of 92mm x 30mm x 0.55 BMT and are fixed to floor and ceiling. Steel studs with minimum dimensions 64 x 34 x 0.55 mm BMT with 6mm return.

Stud to be fixed to the tracks using Staggered Stud Clip and placed at 600mm centres with a 15mm expansion gap at top of frame.

Studs to be offset 300mm centres.

No other fixings to tracks are allowed.

Wall Heights

Recommended maximum height is 2.4m. Higher walls may be subject to specific engineering design or consult the framing manufacturer.

Partition Width

In order to achieve the STC ratings in the table above the partition width (excluding the board) shall be a minimum of 92mm.

Track Depth	Lining Suffix	Plasterboard	Total Partition
92mm	**S40**	40mm	132mm

Wall Sound Absorber

Install Sound Absorber between studs of the frame. Use 75mm thick R1.8 glass wool blanket. Split 600mm wide blankets into 300mm.

Plasterboard Lining

NB: The installer must look for the Product Identification Code on the face paper to ensure the correct board type is installed. Refer to the Face Paper Product Identification Code table on this page.

Two layers of 10mm EPB FireSmart® linings fixed to each side of the Staggered steel framing.

Vertical fixing only permitted. Use full height sheets where possible. All sheet joints must be fixed over steel framing. Vertical joints of the outer layer should be offset by 600mm from those of the inner layer. Sheet end butt joints must be formed over nogs and offset the outer layer joints from the inner layer. The inner layers are fixed hard to the floor. Sheets shall be touch fitted.

Fixing of Linings

Fasteners

System Number	Side One		Side Two	
	1st Layer	2nd Layer	1st Layer	2nd Layer
	Self-Tapping Drywall Screws			
E4SSA45-F40	10mm	10mm	10mm	10mm
	25 x 6g	32 x 6g	25 x 6g	32 x 6g

Fastener Centres

Inner layer: Fix at 600mm centres up all studs.

Outer Layer: Fix at 300mm centres up all studs.

Place fasteners minimum 12mm from the sheet edge and 50mm from sheet ends

Place fasteners at 200mm centres where sheet end butt joints occur.

Avoid outer layer screws from hitting inner layer screws.

Acoustic Sealant

A bead of acoustical sealant is required around the perimeter of the inner layer and the outer layer is bedded onto the bead. The perimeter junctions of the wall must be airtight.

Jointing

Inner Layer: Unstopped

Outer Layer: All fastener heads stopped and all sheet joints reinforced with paper jointing tape and stopped. Wall to ceiling junctions are to be reinforced with paper tape and square stopped or finished with Cornice. All in accordance with EPB® Plasterboard Installation Guide.

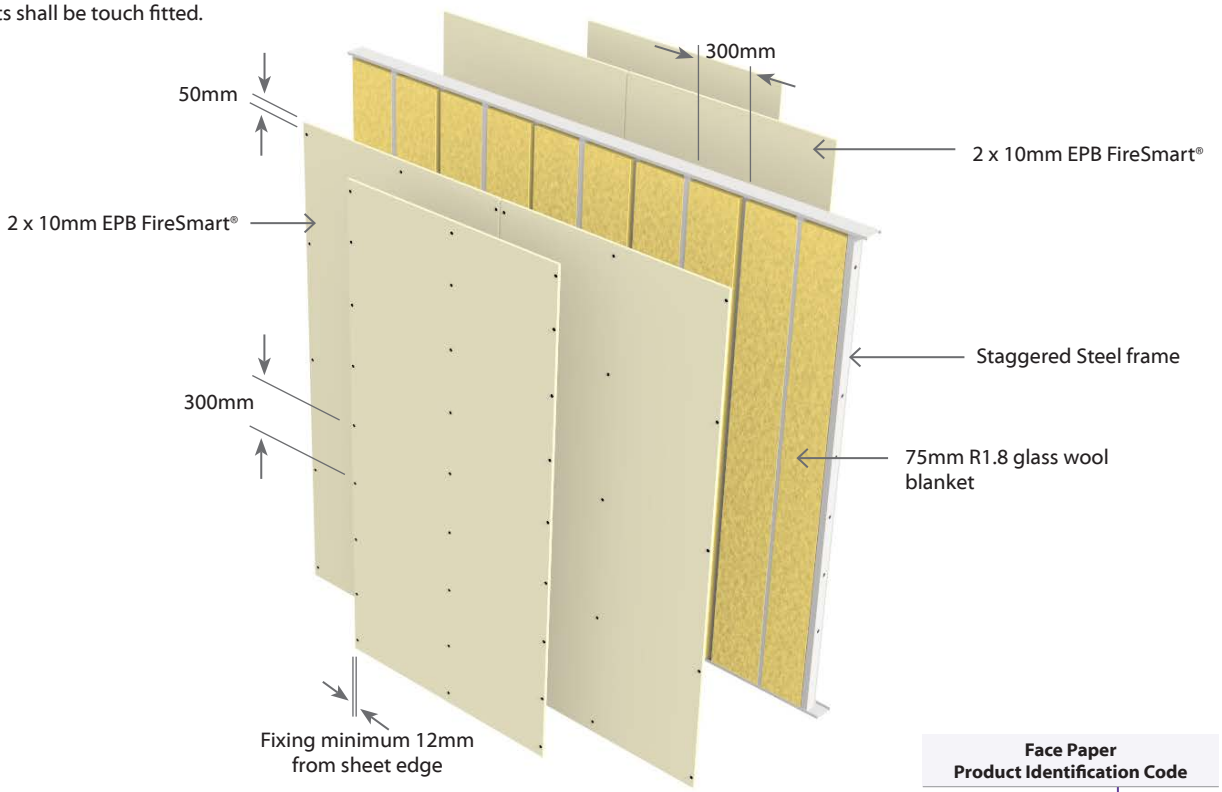

Face Paper Product Identification Code	
10mm EPB FireSmart®	**F10**

E3SSA60 Staggered Steel Frame | Non Load Bearing | Two Way FRR

3 Layers: 1 Layer of Plasterboard to one side of frame & 2 Layers of Plasterboard to other side of frame

Full Intertenancy **A**coustic

System Number	Lining Suffix	FRR	Load Bearing Ability	Noise Control		Lining Requirement
				STC	Rw	
E3SSA60	**-MS39**	-/60/60	NLB	56	55	1 x 13mm EPB BraceSmart®/NoiseSmart® one side 2 x 13mm EPB® Standard other side
	-M39	-/60/60	NLB	57	56	1 x 13mm EPB BraceSmart®/NoiseSmart® one side 2 x 13mm EPB BraceSmart®/NoiseSmart® other side

Framing

Staggered Steel Frame – Track to be a minimum size of 92mm x 30mm x 0.55 BMT and are fixed to floor and ceiling. Steel studs with minimum dimensions 64 x 34mm x 0.55 BMT with 6mm return. Stud to be fixed to the tracks using Staggered Stud Clip and placed at 600mm centres with a 15mm expansion gap at top of frame. Studs to be offset 300mm centres.

No other fixings to the track allowed.

Wall Heights

Recommended maximum height is 2.4m. Higher walls may be subject to specific engineering design or consult the framing manufacturer.

Partition Width

In order to achieve the STC ratings in the table above the partition width (excluding the board) shall be a minimum of 92mm.

Track Depth	Lining Suffix		Plasterboard	Total Partition
92mm	**M39**	**MS39**	39mm	131mm

Wall Sound Absorber

Install Sound Absorber between studs of the frame. Use 75mm thick R1.8 glass wool blanket. Split 600mm wide blankets into 300mm.

Plasterboard Lining

NB: The installer must look for the Product Identification Code on the face paper to ensure the correct board type is installed. Refer to the Face Paper Product Identification Code table on this page.

One layer of EPB® Plasterboard lining on one side and Two layers on the other side as per specified system above.

Vertical fixing only permitted. Use full height sheets where possible. All sheet joints must be fixed over steel framing. Vertical joints of the outer layer should be offset by 600mm from those of the inner layer. Sheet end butt joints must be formed over nogs and offset the outer layer joints from the inner layer. The inner layers are fixed hard to the floor. Sheets shall be touch fitted.

Fixing of Linings

Fasteners (As per Specified System Above)

System Number	Side One		Side Two
	1st Layer	2nd Layer	Single Layer
	Self-Tapping Drywall Screws		
E3SSA60-MS39 **E3SSA60-M39**	13mm 25 x 6g	13mm 41 x 6g	13mm 25 x 6g

Fastener Centres

Inner layer: Fix at 600mm centres up all studs.

Single or Outer Layer: Fix at 300mm centres up all studs.

Place fasteners minimum 12mm from the sheet edge and 50mm from sheet ends

Place fasteners at 200mm centres where sheet end butt joints occur.

Avoid outer layer screws from hitting inner layer screws.

Acoustic Sealant

A bead of acoustic sealant is required around the perimeter of the framing or the inner layer. The single or outer layer is then bedded onto the bead. The perimeter junctions of the wall must be airtight.

Jointing

Inner Layer: Unstopped

Outer or Single Layer: All fastener heads stopped and all sheet joints reinforced with paper jointing tape and stopped. Wall to ceiling junctions are to be reinforced with paper tape and square stopped or finished with Cornice. All in accordance with EPB® Plasterboard Installation Guide.

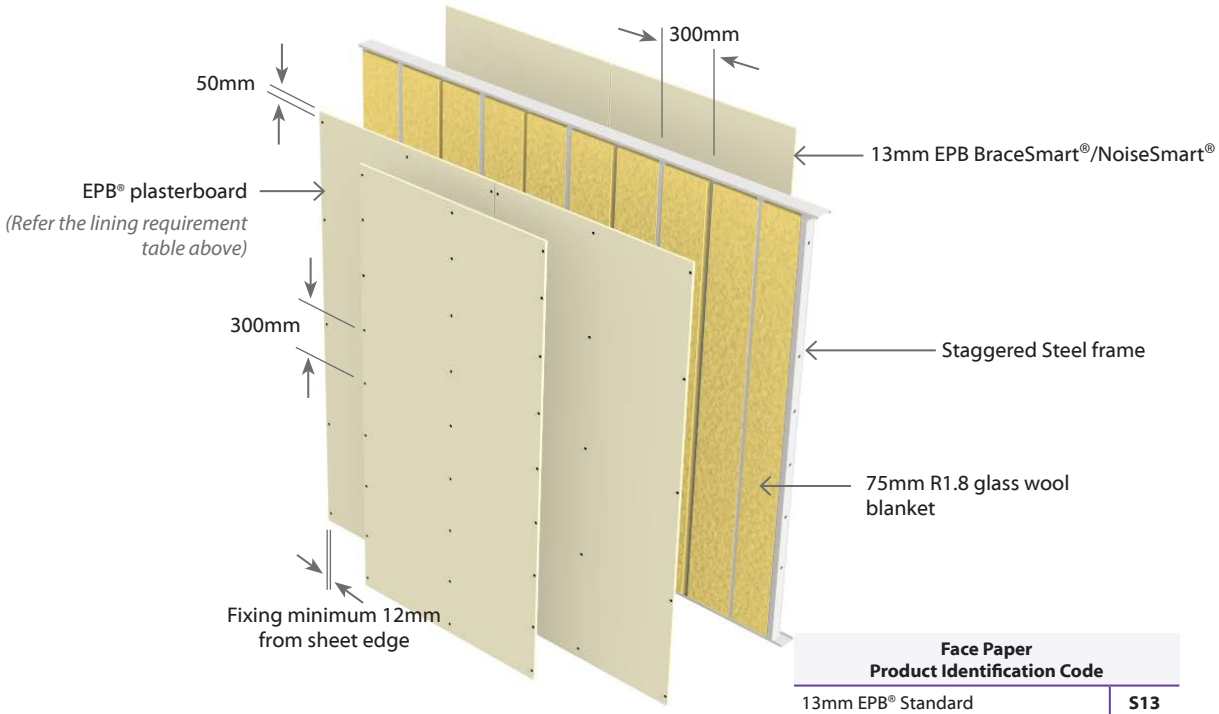

Face Paper Product Identification Code	
13mm EPB® Standard	**S13**
13mm EPB BraceSmart®/NoiseSmart®	**M13**

E4SSA60 Staggered Steel Frame | Non Load Bearing | Two Way FRR

4 Layers: 2 Layers of Plasterboard to each side of frame | Full Intertenancy **A**coustic

System Number	Lining Suffix	FRR	Load Bearing Ability	Noise Control		Lining Requirement
				STC	Rw	
E4SSA60	**-S52**	-/60/60	NLB	59	58	2 x 13mm EPB® Standard each side

Framing

Staggered Steel Frame – Tracks to be a minimum size of 92mm x 30mm x 0.55 BMT and are fixed to floor and ceiling. Steel studs with minimum dimensions 64 x 34mm x 0.55 BMT with 6mm return. Stud to be fixed to the tracks using Staggered Stud Clip and placed at 600mm centres with a 15mm expansion gap at top of frame.

Studs to be offset 300mm centres.

No other fixings to track are allowed.

Wall Heights

Recommended maximum height is 2.4m. Higher walls may be subject to specific engineering design or consult the framing manufacturer.

Partition Width

In order to achieve the STC ratings in the table above the partition width (excluding the board) shall be a minimum of 92mm.

Track Depth	Lining Suffix	Plasterboard	Total Partition
92mm	**S52**	52mm	144mm

Wall Sound Absorber

Install Sound Absorber between studs of the frame. Use 75mm thick R1.8 glass wool blanket. Split 600mm wide blankets into 300mm.

Plasterboard Lining

NB: The installer must look for the Product Identification Code on the face paper to ensure the correct board type is installed. Refer to the Face Paper Product Identification Code table on this page.

Two layers of 13mm EPB® Standard linings fixed to each side of the Staggered steel framing.

Vertical fixing only permitted. Use full height sheets where possible. All sheet joints must be fixed over steel framing. Vertical joints of the outer layer should be offset by 600mm from those of the inner layer. Sheet end butt joints must be formed over nogs and offset the outer layer joints from the inner layer. The inner layers are fixed hard to the floor. Sheets shall be touch fitted.

Fixing of Linings

Fasteners

System Number	Side One		Side Two	
	1st Layer	2nd Layer	1st Layer	2nd Layer
	Self-Tapping Drywall Screws			
E4SSA60-S52	13mm	13mm	13mm	13mm
	25 x 6g	41 x 6g	25 x 6g	41 x 6g

Fastener Centres

Inner layer: Fix at 600mm centres up all studs.

Outer Layer: Fix at 300mm centres up all studs.

Place fasteners minimum 12mm from the sheet edge and 50mm from sheet ends

Place fasteners at 200mm centres where sheet end butt joints occur.

Avoid outer layer screws from hitting inner layer screws.

Acoustic Sealant

A bead of acoustical sealant is required around the perimeter of the inner layer and the outer layer is bedded onto the bead. The perimeter junctions of the wall must be airtight.

Jointing

Inner Layer: Unstopped

Outer Layer: All fastener heads stopped and all sheet joints reinforced with paper jointing tape and stopped. Wall to ceiling junctions are to be reinforced with paper tape and square stopped or finished with Cornice. All in accordance with EPB® Plasterboard Installation Guide.

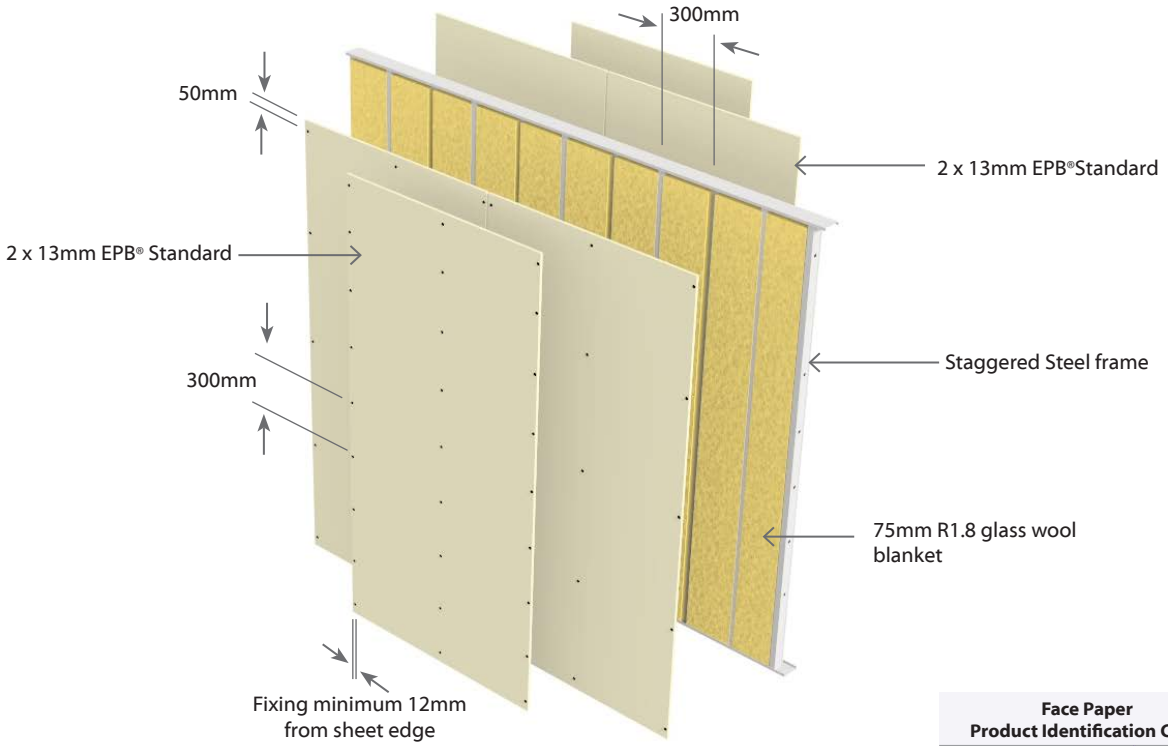

Face Paper Product Identification Code	
13mm EPB® Standard	**S13**

E4SSA90 Staggered Steel Frame | Non Load Bearing | Two Way FRR

4 Layers: 2 Layers of Plasterboard to each side of frame | Full Intertenancy **A**coustic

System Number	Lining Suffix	FRR	Load Bearing Ability	Noise Control		Lining Requirement
				STC	Rw	
E4SSA90	**-M46**	-/90/90	NLB	59	58	1 x 10mm And 1 x 13mm EPB BraceSmart®/NoiseSmart® each side
	-M52	-/90/90	NLB	62	61	2 x 13mm EPB BraceSmart®/NoiseSmart® each side

Framing

Staggered Steel Frame – Tracks to be a minimum size of 92mm x 30mm x 0.55 BMT and are fixed to floor and ceiling. Steel studs with minimum dimensions 64 x 34mm x 0.55 BMT with 6mm return. Stud to be fixed to the tracks using Staggered Stud Clip and placed at 600mm centres with a 15mm expansion gap at top of frame.

Studs to be offset 300mm centres.

No other fixings to track are allowed.

Wall Heights

Recommended maximum height is 2.4m. Higher walls may be subject to specific engineering design or consult the framing manufacturer.

Partition Width

In order to achieve the STC ratings in the table above the partition width (excluding the board) shall be a minimum of 92mm.

Track Depth	Lining Suffix	Plasterboard	Total Partition
92mm	**M46**	46mm	138mm
92mm	**M52**	52mm	144mm

Wall Sound Absorber

Install Sound Absorber between studs of the frame. Use 75mm thick R1.8 glass wool blanket. Split 600mm wide blankets into 300mm.

Plasterboard Lining

NB: The installer must look for the Product Identification Code on the face paper to ensure the correct board type is installed. Refer to the Face Paper Product Identification Code table on this page.

Two layers of EPB® Plasterboard lining on one side and Two Layers on the other side as per specified system above.

Vertical fixing only permitted. Use full height sheets where possible. All sheet joints must be fixed over steel framing. Vertical joints of the outer layer should be offset by 600mm from those of the inner layer. Sheet end butt joints must be formed over nogs and offset the outer layer joints from the inner layer. The inner layers are fixed hard to the floor. Sheets shall be touch fitted.

Fixing of Linings

Fasteners (As per Specified System Above)

System Number	Side One		Side Two	
	1st Layer	2nd Layer	1st Layer	2nd Layer
	Self-Tapping Drywall Screws			
E4SSA90-M46	10mm	13mm	10mm	13mm
	25 x 6g	41 x 6g	25 x 6g	41 x 6g
E4SSA90-M52	13mm	13mm	13mm	13mm
	25 x 6g	41 x 6g	25 x 6g	41 x 6g

Fastener Centres

Inner layer: Fix at 600mm centres up all studs.

Outer Layer: Fix at 300mm centres up all studs.

Place fasteners minimum 12mm from the sheet edge and 50mm from sheet ends

Place fasteners at 200mm centres where sheet end butt joints occur.

Avoid outer layer screws from hitting inner layer screws.

Acoustic Sealant

A bead of acoustical sealant is required around the perimeter of the inner layer and the outer layer is bedded onto the bead. The perimeter junctions of the wall must be airtight.

Jointing

Inner Layer: Unstopped

Outer Layer: All fastener heads stopped and all sheet joints reinforced with paper jointing tape and stopped. Wall to ceiling junctions are to be reinforced with paper tape and square stopped or finished with Cornice. All in accordance with EPB® Plasterboard Installation Guide.

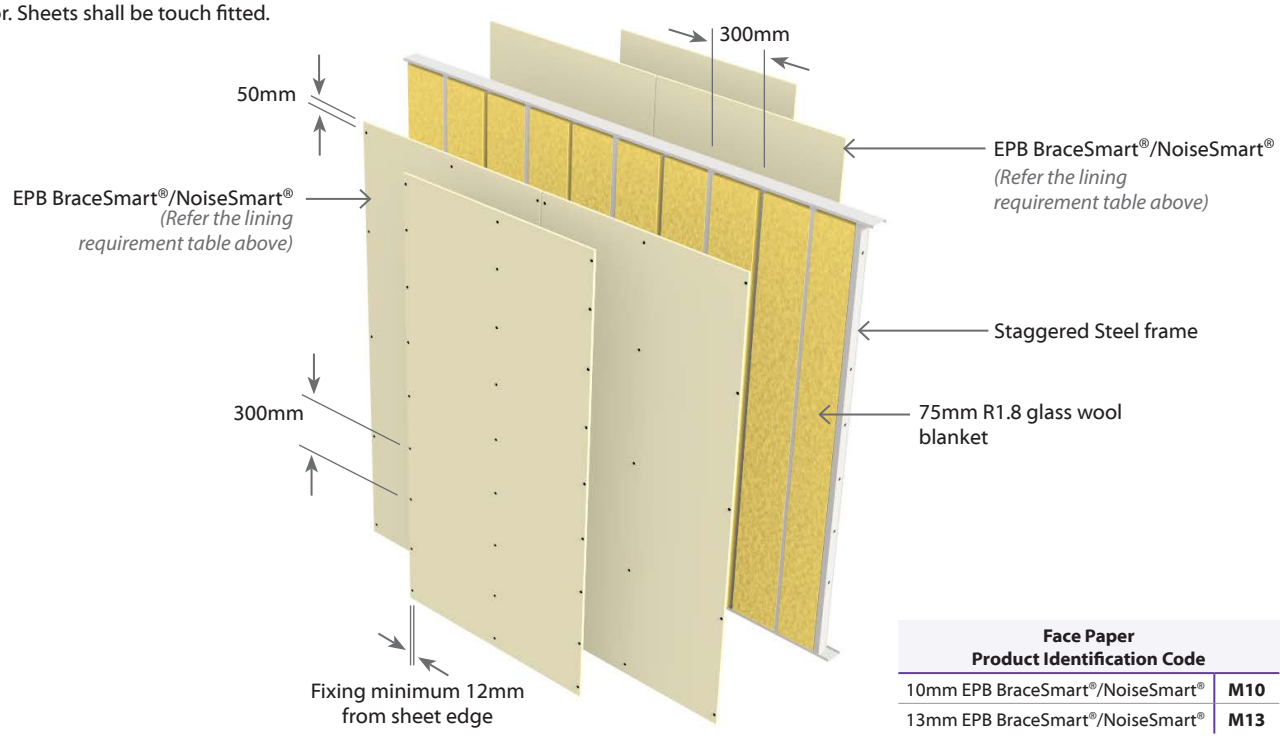

Face Paper Product Identification Code	
10mm EPB BraceSmart®/NoiseSmart®	**M10**
13mm EPB BraceSmart®/NoiseSmart®	**M13**

Floor/Ceiling Systems

EFJ2DFA60 Direct Fixed Clip - Floating James Hardie Secura™ Floor - Timber Joists | Load Bearing

2 Layers: 2 Layers of Plasterboard to underside of frame | Full Intertenancy **A**coustic

System Number	Lining Suffix	FRR	Load Bearing Ability	Noise Control			Lining Requirement
				STC	Rw	IIC*	
EFJ2DFA60	-FS26	60/60/60	LB	66	65	57-76	1 x 13mm EPB FireSmart® 1 x 13mm EPB® Standard
	-F26	60/60/60	LB	67	66	57-76	2 x 13mm EPB FireSmart®
	-M26	60/60/60	LB	68	67	57-77	2 x 13mm EPB BraceSmart®/NoiseSmart®

Framing

Timber floor joists shall comply with NZS3604 with a minimum depth of 190mm x 45mm and spaced at no more than 450mm centres. Nogs or framing is required at the perimeter of the Fire Rated ceiling.

Alternative Framing

Alternatively, a proprietary I-joist system with a minimum depth of 190mm and spaced at no more than 450mm centres may be used subject to specific structural design and approved by the normal building consent process. Consult the joist manufacturer regarding construction of the solid blocking contained in the floor/ceiling to wall junctions.

Initial Floor

19mm thick James Hardie Secura™ Interior Flooring laid at right angles to the timber joists in a staggered pattern in accordance to James Hardie Secura™ Interior Flooring Installation Manual. Flooring sheet joints must have a tongue and groove jointer or be formed over framing. When using the site cut sheet pieces, the minimum length of the cut sheet to be used must be 900mm or more.

Adhesive Requirement (Both flooring layers)

A continuous 6mm bead of Adhesive to be applied over the joists or channels before laying the flooring materials.

Suitable Adhesive options are:

- Bostik Seal n Flex-1 or
- Holdfast 220LM or
- Sikaflex 11FC

Fasteners

Initial Secura Floor Layer

Fix Secura™ Interior Flooring across the joists using angular grooved galvanised or stainless steel 50 x 2.87mm gun nails or can be screw fixed using a 40mm x 10g timber thread self-embedding screw.

Floating Secura Floor Layer

Fix Secura™ Interior Flooring across the Acoustic Channels using 50mm x 10g self-tapping steel screws.

Fastening Centres (Both flooring layers)

Fix at 200mm centres along each joist or channel. Fasteners to be placed at 25mm min at long sheet edges and 12mm from transverse edges. Fastener edge distance of 50mm to be maintained at sheet corners.

Flooring Void

James Hardie Acoustic Cradles are to be positioned on the James Hardie Secura™ Interior Flooring at 450mm centres max starting from the edge of the room. The Acoustic Cradles need not be aligned with the timber floor joists and can be laid in either direction.

The Cradles are not to be fixed down to the bottom flooring layer.

James Hardie Acoustic Floor Channels to be placed inside the Acoustic Cradles. Acoustic Channels are spaced at 450mm centres maximum.

Flooring Void Sound Absorber

Install 50mm thick R1.2 sound absorber with a minimum density of 9.6kg/m^3 between the James Hardie Acoustic Floor Channels.

Floating Floor

James Hardie Secura™ Interior Flooring to be laid at right angles to the Acoustic Channels and fixed at 200mm centres along the channel. Lay the sheets in a staggered pattern. Flooring edges other than tongue and groove must be supported by channels.

Allow 5-8mm gap where Secura™ Interior Flooring sheet edges butt into the external/ internal walls. Fill the gaps with an acoustic sealant.

Acoustic Clip and Battens

The Acoustic Clip shall be fastened to the joists at 1200mm centres maximum and no less than 900mm centres to support the metal ceiling battens which are spaced at 600mm centres maximum. Use 3 x 32mm x 8g Wafer Head screws. Insert first screw into the middle slot. Adjust clip to correct height. Then insert remaining two screws. A minimum 10mm gap is recommended between the flange of the ceiling batten and the underside of the joist.

Ceiling Void Sound Absorber

Install minimum 75mm thick R1.8 sound absorber with a minimum density of 9.6kg/m^3 between the joists above the metal ceiling battens.

EPB Plasterboard Ceiling Lining

NB: The installer must look for the Product Identification Code on the face paper to ensure the correct board type is installed. Refer to the Face Paper Product Identification Code table on this page.

Two layers of EPB® Plasterboard as per specified system above fixed at right angles to the metal ceiling battens. All sheet end butt joints shall occur on the battens. Offset the outer layer by 600mm from the inner layer. Sheet joints should be touched fitted.

Fixing of EPB Plasterboard Internal Linings

Fasteners (As per Specified System Above)

System Number	1st Layer	2nd Layer
	Self-Tapping Drywall Screws	
EFJ2DFA60-FS26	13mm	13mm
EFJ2DFA60-F26	32 x 6g	41 x 6g
EFJ2DFA60-M26		

Fastening Centres

Ceiling sheets shall be fixed at 200mm centres along each metal ceiling batten.

Fix butt ends at 100mm centres.

Fasteners to be placed no closer than 12mm from sheet edge.

Avoid outer layer screws from hitting inner layer screws.

Acoustic Sealant

A bead of fire retardant Acoustic Sealant must be applied around the perimeter of the first layer and the second layer bedded on the bead.

Wall/Ceiling Junction

The internal angle between the ceilings and walls must be protected by Cornice or square stopped corners taped and filled in accordance with EPB Plasterboard Installation Guide.

Jointing

Inner layer: Unstopped.

Outer Layer: All fastener heads stopped and all sheet joints reinforced with paper jointing tape and stopped in accordance with the publication entitled EPB® Plasterboard Installation Guide.

Additional Reference Material

Refer to James Hardie Secura Interior Flooring Installation Manual and the James Hardie Fire and Acoustic Floor System Installation Manual for additional information about covering general and wet area installation and penetrations and control joints.

***Impact Insulation Class (IIC)**

IIC of 57 is achieved with a bare floor.

IIC of 58 is achieved with loose laid Vinyl.

IIC of 75 is achieved with 40oz loop pile carpet on 8mm foam chip underlay.

IIC of 76 is achieved with 40oz loop pile carpet on waffle underlay.

EFJ2DFA60 Direct Fixed Clip - Floating James Hardie Secura™ Floor - Timber Joists | Load Bearing | Full Intertenancy Acoustic

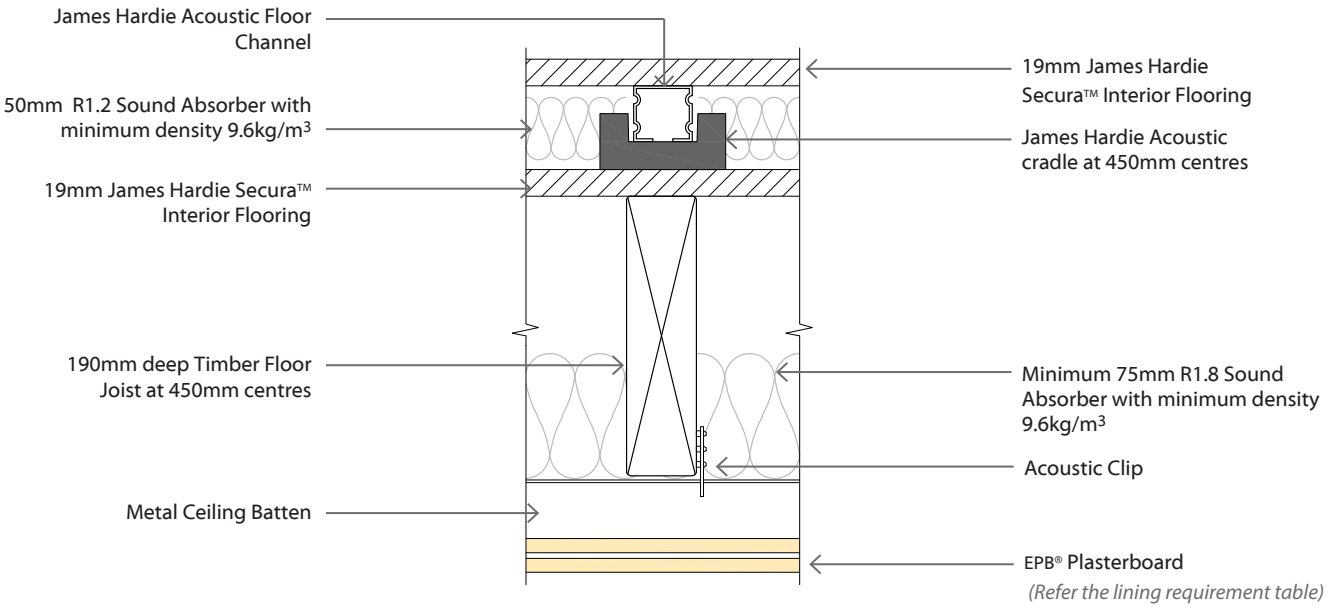

ENS-312

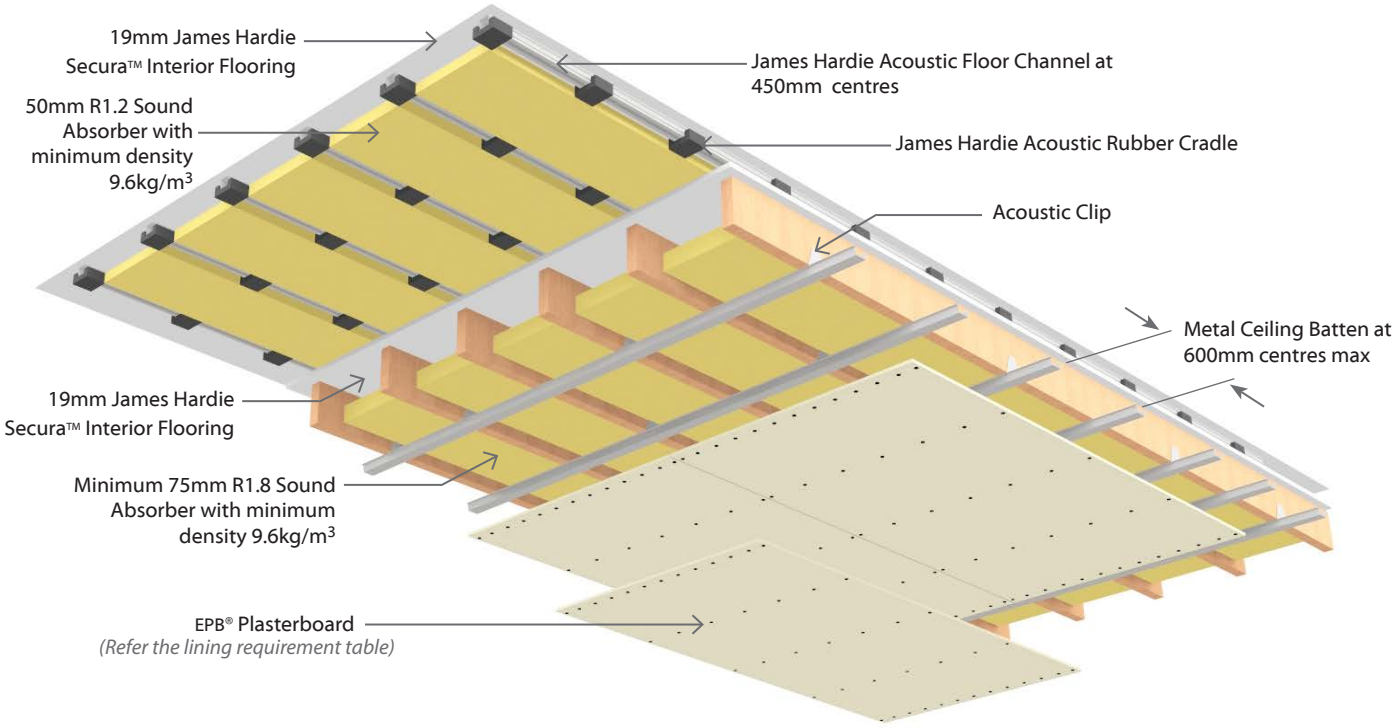

Face Paper Product Identification Code	
13mm EPB® Standard	**S13**
13mm EPB FireSmart®	**F13**
13mm EPB BraceSmart®/NoiseSmart®	**M13**

EFP2DFA60 Direct Fixed Clip - Floating Particle Board Floor - Timber Joists

Load Bearing

2 Layers: 2 Layers of Plasterboard to underside of frame

Full Intertenancy
Acoustic

System Number	Lining Suffix	FRR	Load Bearing Ability	Noise Control			Lining Requirement
				STC	Rw	IIC*	
EFP2DFA60	-FS26	60/60/60	LB	63	62	55-72	1 x 13mm EPB FireSmart® 1 x 13mm EPB® Standard
	-F26	60/60/60	LB	64	63	55-72	2 x 13mm EPB FireSmart®
	-M26	60/60/60	LB	65	64	56-72	2 x 13mm EPB BraceSmart®/NoiseSmart®

Framing

Timber floor joists shall comply with NZS3604 with a minimum depth of 190mm x 45mm and spaced at no more than 600mm centres. Nogs or framing is required at the perimeter of the Fire Rated ceiling.

Alternative Framing

Alternatively, a proprietary I-joist system with a minimum depth of 190mm and spaced at no more than 600mm centres may be used subject to specific structural design and approved by the normal building consent process. Consult the joist manufacturer regarding construction of the solid blocking contained in the floor/ceiling to wall junctions.

Initial Floor

20mm Tongue & groove Particle board Flooring laid at right angles to the timber joists in a staggered pattern in accordance to the Particle board manufacturer's Technical Manuals. Flooring sheet joints must have a tongue and groove jointer or be formed over framing. No nogs required to support the edges of longitudinal sheets. When using the site cut sheet pieces, the minimum length of the cut sheet to be used must be 900mm or more.

Adhesive Requirement (Both flooring layers)

A continuous 6mm bead of Adhesive to be applied over the joists or channels before laying the flooring materials. Apply a 2mm bead along the tongue of the Tongue and Groove panels as they are laid. Suitable Adhesive options are:

- Bostik Seal n Flex-1 or Holdfast 220LM
- HB Fuller-Sturdi Bond Sikaflex 11FC
- Holdfast 220LM or
- Sikaflex 11FC

Fasteners

Initial 20mm Tongue & Groove Particle Board Flooring Layer

Fix 20mm Tongue & groove Particle board Flooring across the joists using angular grooved galvanised or stainless steel 60 x 3.15mm gun nails or can be screw fixed using a 45mm x 8g timber thread self-drilling screw (corrosion resistant).

Floating 20mm Tongue & Groove Particle Board Flooring Layer

Fix 20mm Tongue & groove Particle board Flooring across the Acoustic Channels using 45mm x 8g timber thread self-drilling screws (corrosion resistant).

Fastening Centres (Both flooring layers)

Fix at 200mm centres along each joist or channel. Fasteners to be placed at 15mm min at long sheet edges and from transverse edges. Fastener edge distance of 50mm to be maintained at sheet corners.

Flooring Void

AcoustiFlor™ Acoustic Cradles are to be positioned on the tongue & groove particle board flooring at 450mm centres max starting from the edge of the room. The Acoustic Cradles need not be aligned with the timber floor joists and can be laid in either direction.

The Cradles are not to be fixed down to the bottom flooring layer.

AcoustiFlor™ Structural Battens to be placed inside the AcoustiFlor™ Acoustic Cradles at 400mm centres maximum.

Flooring Void Sound Absorber

Install 50mm thick R1.2 sound absorber with a minimum density of 9.6kg/m^3 between the AcoustiFlor™ Structural Battens.

Floating Floor

The 20mm Tongue & groove Particle board Flooring is to be laid at right angles to AcoustiFlor™ Structural Batten and fixed at 200mm centres along the batten. Lay the sheets in a staggered pattern. Flooring edges other than Tongue and groove to be supported by battens.

When using the site cut sheet pieces, the minimum length of the cut sheet to be used must be 900mm or more.

Allow 5mm gap where Particle board flooring sheet edges butt into external/internal walls. Fill the gap with fire retardant acoustic sealant.

Acoustic Clip and Battens

The Acoustic Clip shall be fastened to the joists at 1200mm centres maximum and no less than 900mm centres to support the metal ceiling battens which are spaced at 600mm centres maximum. Use 3 x 32mm x 8g Wafer Head screws. Insert first screw into the middle slot. Adjust clip to correct height. Then insert remaining two screws. A minimum 10mm gap is recommended between the flange of the ceiling batten and the underside of the joist.

Ceiling Void Sound Absorber

Install minimum 75mm thick R1.8 sound absorber with a minimum density of 9.6kg/m^3 between the joists above the metal ceiling battens.

EPB Plasterboard Ceiling Lining

NB: The installer must look for the Product Identification Code on the face paper to ensure the correct board type is installed. Refer to the Face Paper Product Identification Code table on this page.

Two layers of EPB® Plasterboard as per specified system above fixed at right angles to the metal ceiling battens. All sheet end butt joints shall occur on the battens. Offset the outer layer by 600mm from the inner layer. Sheet joints should be touched fitted.

Fixing of EPB Plasterboard Internal Linings

Fasteners (As per Specified System Above)

System Number	1st Layer	2nd Layer
	Self-Tapping Drywall Screws	
EFP2DFA60-FS26 EFP2DFA60-F26	13mm	13mm
EFP2DFA60-M26	32mm x 6g	41mm x 6g

Fastening Centres

Ceiling sheets shall be fixed at 200mm centres along each metal ceiling batten.

Fix butt ends at 100mm centres.

Fasteners to be placed no closer than 12mm from sheet edge.

Avoid outer layer screws from hitting inner layer screws.

Acoustic Sealant

A bead of fire retardant Acoustic Sealant must be applied around the perimeter of the first layer and the second layer bedded on the bead.

Wall/Ceiling Junction

The internal angle between the ceilings and walls must be protected by Cornice or square stopped corners taped and filled in accordance with EPB Plasterboard Installation Guide.

Jointing

Inner layer: Unstopped.

Outer Layer: All fastener heads stopped and all sheet joints reinforced with paper jointing tape and stopped in accordance with the publication entitled EPB® Plasterboard Installation Guide.

EFP2DFA60 Direct Fixed Clip - Floating Particle Board Floor - Timber Joists

Load Bearing

2 Layers: 2 Layers of Plasterboard to underside of frame

Full Intertenancy
Acoustic

System Number	Lining Suffix	FRR	Load Bearing Ability	Noise Control			Lining Requirement
				STC	Rw	IIC*	
EFP2DFA60	-FS26	60/60/60	LB	63	62	55-72	1 x 13mm EPB FireSmart® 1 x 13mm EPB® Standard
	-F26	60/60/60	LB	64	63	55-72	2 x 13mm EPB FireSmart®
	-M26	60/60/60	LB	65	64	56-72	2 x 13mm EPB BraceSmart®/NoiseSmart®

Additional Reference Material

Refer to Particle board Manufacturer's Technical Manuals for additional information about covering general and wet area installation and penetrations.

***Impact Insulation Class (IIC)**

IIC of 55 is achieved with a bare floor.

IIC of 56 is achieved with loose laid Vinyl.

IIC of 70 is achieved with 40oz loop pile carpet on 8mm foam chip underlay.

IIC of 72 is achieved with 40oz loop pile carpet on waffle underlay.

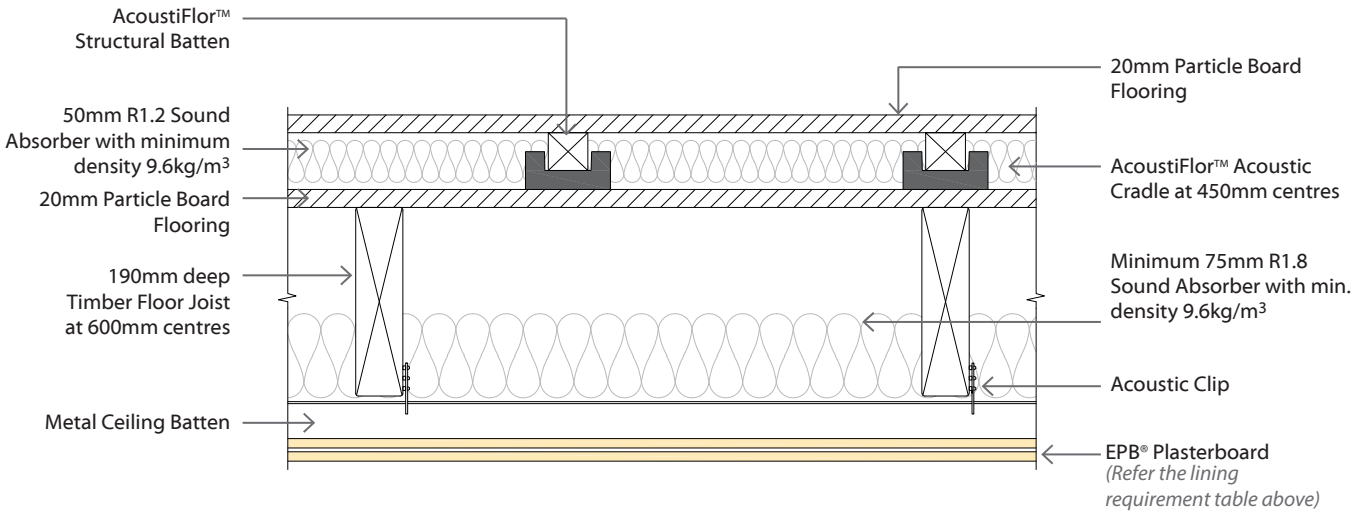

ENS-311

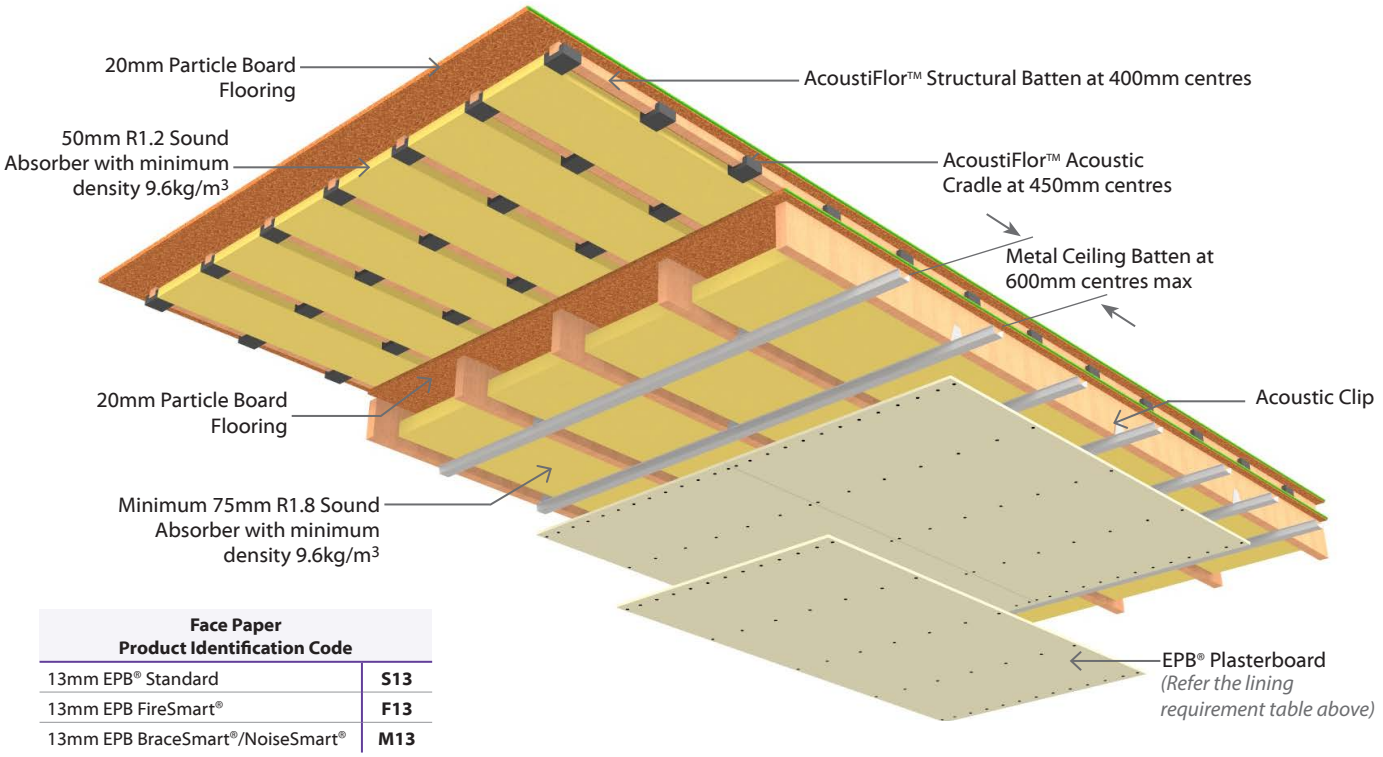

Face Paper Product Identification Code	
13mm EPB® Standard	S13
13mm EPB FireSmart®	F13
13mm EPB BraceSmart®/NoiseSmart®	M13

EFJ2DFsA45 Direct Fixed Clip - Floating James Hardie Secura™ Floor - Steel Joists | Load Bearing

2 Layers: 2 Layers of Plasterboard to underside of frame | Full Intertenancy **A**coustic

System Number	Lining Suffix	FRR	Load Bearing Ability	Noise Control			Lining Requirement
				STC	Rw	IIC*	
EFJ2DFsA45	-F26	45/45/45	LB	66	65	56-76	2 x 13mm EPB FireSmart®
	-M26	45/45/45	LB	67	66	56-76	2 x 13mm EPB BraceSmart®/NoiseSmart®

Floor Framing
A specifically designed steel floor structure with C-section steel floor joists of 190mm minimum depth and with 45mm flanges with a steel gauge of 1.55mm. Joist spacing's at no more than 600mm centres.

Initial Floor
19mm thick James Hardie Secura™ Interior Flooring laid at right angles to the steel joists in a staggered pattern in accordance to James Hardie Secura™ Interior Flooring Installation Manual. Flooring sheet joints must have a tongue and groove jointer or be formed over framing. When using the site cut sheet pieces, the minimum length of the cut sheet to be used must be 900mm or more.

Adhesive Requirement (Both flooring layers)
A continuous 6mm bead of Adhesive to be applied over the joists or channels before laying the flooring materials.

Suitable Adhesive options are:

- Bostik Seal n Flex-1 or
- Holdfast 220LM or
- Sikaflex 11FC

Fasteners
Initial Secura Floor Layer

Fix Secura™ Interior Flooring across the joists using 8-10g x 40-45mm wing tek min. class 3 coating screws.

Floating Secura Floor Layer

Fix Secura™ Interior Flooring across the Acoustic Channels using 50mm x 10g self-tapping steel screws.

Fastening Centres (Both flooring layers)
Fix at 200mm centres along each joist or channel. Fasteners to be placed at 25mm min at long sheet edges and 12mm from transverse edges. Fastener edge distance of 50mm to be maintained at sheet corners.

Flooring Void
James Hardie Acoustic Cradles are to be positioned on the James Hardie Secura™ Interior Flooring at 450mm centres max starting from the edge of the room. The Acoustic Cradles need not be aligned with the steel floor joists and can be laid in either direction.

The Cradles are not to be fixed down to the bottom flooring layer.

James Hardie Acoustic Floor Channels to be placed inside the Acoustic Cradles. Acoustic Channels are spaced at 450mm centres maximum.

Flooring Void Sound Absorber
Install 50mm thick R1.2 sound absorber with a minimum density of 9.6kg/m^3 between the James Hardie Acoustic Floor Channels.

Floating Floor
James Hardie Secura™ Interior Flooring to be laid at right angles to the Acoustic Channels and fixed at 200mm centres along the channel. Lay the sheets in a staggered pattern. Flooring edges other than tongue and groove must be supported by channels.

Allow 5-8mm gap where Secura™ Interior Flooring sheet edges butt into the external/ internal walls. Fill the gaps with an acoustic sealant.

Acoustic Clip and Battens
The Acoustic Clip shall be fastened to the joists at 1200mm centres maximum (and no less than 900mm centres) to support the metal ceiling battens which are spaced at 600mm centres maximum.

Use 3 x 30mm x 10g Drill-Point Wafer Head Screws. Insert first screw into the middle slot. Adjust clip to correct height. Then insert remaining two screws. A minimum 10mm gap is recommended between the flange of the ceiling batten and the underside of the joist.

Ceiling Void Sound Absorber
Install minimum 75mm thick R1.8 sound absorber with a minimum density of 9.6kg/m^3 between the joists above the metal ceiling battens.

EPB Plasterboard Ceiling Lining
NB: The installer must look for the Product Identification Code on the face paper to ensure the correct board type is installed. Refer to the Face Paper Product Identification Code table on this page.

Two layers of EPB® Plasterboard as per specified system above, fixed at right angles to the metal ceiling battens. All sheet end butt joints shall occur on the battens. Offset the outer layer by 600mm from the inner layer. Sheet joints should be touched fitted.

Fixing of EPB Plasterboard Internal Linings
Fasteners (As per Specified System Above)

System Number	1st Layer	2nd Layer
	Self-Tapping Drywall Screws	
EFJ2DFsA45-F26	13mm	13mm
EFJ2DFsA45-M26	32 x 6g	41 x 6g

Fastening Centres

Ceiling sheets shall be fixed at 200mm centres along each metal ceiling batten.

Fix butt ends at 100mm centres.

Fasteners to be placed no closer than 12mm from sheet edge.

Avoid outer layer screws from hitting inner layer screws.

Acoustic Sealant
A bead of fire retardant Acoustic Sealant must be applied around the perimeter of the first layer and the second layer bedded on the bead.

Wall/Ceiling Junction
The internal angle between the ceilings and walls must be protected by Cornice or square stopped corners taped and filled in accordance with EPB® Plasterboard Installation Guide.

Jointing
Inner layer: Unstopped.

Outer Layer: All fastener heads stopped and all sheet joints reinforced with paper jointing tape and stopped in accordance with the publication entitled EPB® Plasterboard Installation Guide.

Additional Reference Material
Refer to James Hardie Secura™ Interior Flooring Installation Manual and the James Hardie Fire and Acoustic Floor System Installation Manual for additional information about covering general and wet area installation and penetrations and control joints.

***Impact Insulation Class (IIC)**

IIC of 56 is achieved with a bare floor.

IIC of 58 is achieved with loose laid Vinyl.

IIC of 75 is achieved with 40oz loop pile carpet on 8mm foam chip underlay.

IIC of 76 is achieved with 40oz loop pile carpet on waffle underlay.

EFJ2DFsA45 Direct Fixed Clip - Floating James Hardie Secura™ Floor - Steel Joists | Load Bearing

2 Layers: 2 Layers of Plasterboard to underside of frame | Full Intertenancy Acoustic

System Number	Lining Suffix	FRR	Load Bearing Ability	Noise Control			Lining Requirement
				STC	Rw	IIC*	
EFJ2DFsA45	-F26	45/45/45	LB	66	65	56-76	2 x 13mm EPB FireSmart®
	-M26	45/45/45	LB	67	66	56-76	2 x 13mm EPB BraceSmart®/NoiseSmart®

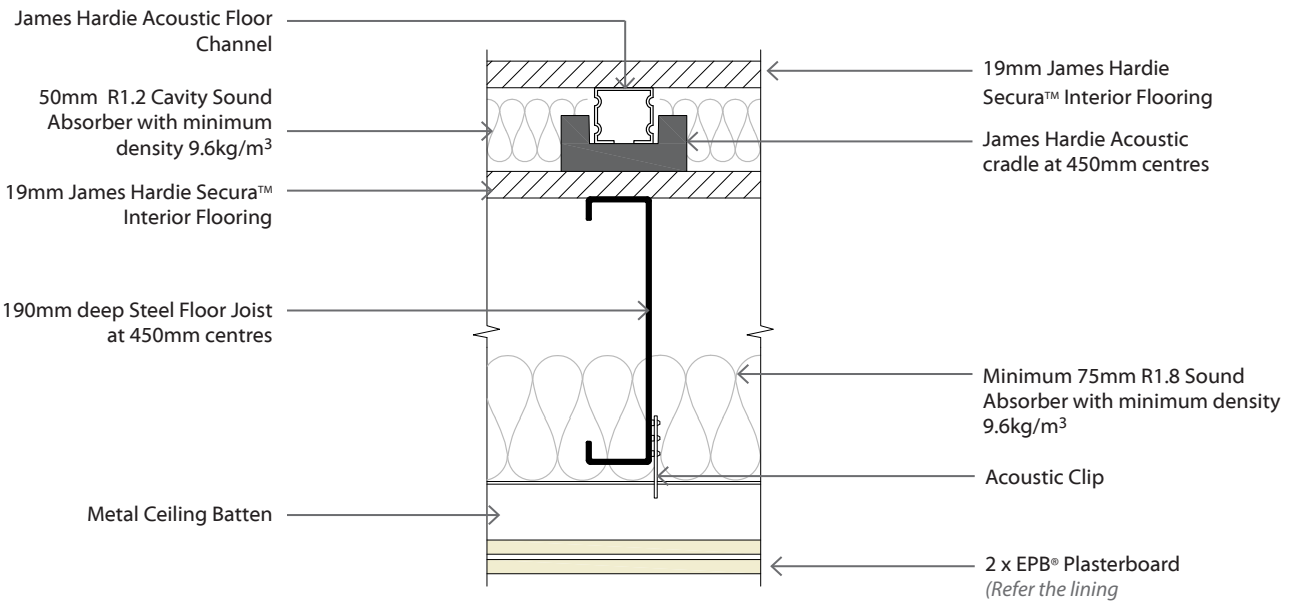

ENS-313

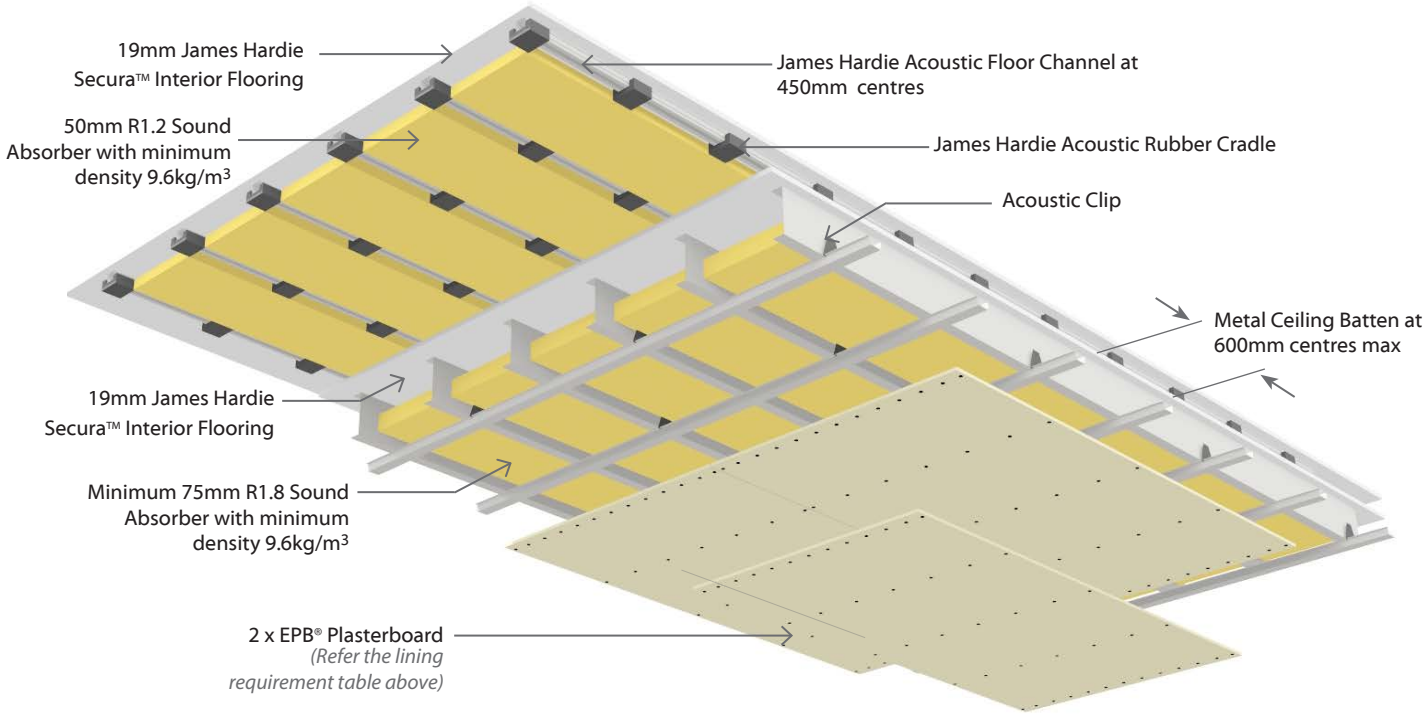

Face Paper Product Identification Code	
13mm EPB FireSmart®	F13
13mm EPB BraceSmart®/NoiseSmart®	M13

EFP2DFsA45 Direct Fixed Clip - Floating Particle Board Floor - Steel Joists

Load Bearing

2 Layers: 2 Layers of Plasterboard to underside of frame

Full Intertenancy
Acoustic

System Number	Lining Suffix	FRR	Load Bearing Ability	Noise Control			Lining Requirement
				STC	Rw	IIC*	
EFP2DFsA45	-F26	45/45/45	LB	63	62	55-72	2 x 13mm EPB FireSmart®
	-M26	45/45/45	LB	64	63	55-72	2 x 13mm EPB BraceSmart®/NoiseSmart®

Framing
A specifically designed steel floor structure with C-section steel floor joists of 190mm minimum depth and with 45mm flanges with a steel gauge of 1.55mm. Joist spacing's at no more than 600mm centres.

Initial Floor
20mm Tongue & groove Particle board flooring laid at right angles to the steel joists in a staggered pattern in accordance to the Particle board manufacturer's Technical Manuals. Flooring sheet joints must have a tongue and groove jointer or be formed over framing. No nogs required to support the edges of longitudinal sheets. When using the site cut sheet pieces, the minimum length of the cut sheet to be used must be 900mm or more.

Adhesive Requirement (Both flooring layers)
A continuous 6mm bead of Adhesive to be applied over the joists or channels before laying the flooring materials. Apply a 2mm bead along the tongue of the Tongue and groove panels as they are laid. Suitable Adhesive options are:

- Bostik Seal n Flex-1 or
- HB Fuller-Sturdi Bond
- Holdfast 220LM or
- Sikaflex 11FC

Fasteners
Initial 20mm Tongue & Groove Particle Board Flooring Layer
Fix 20mm Tongue & groove Particle board Flooring across the joists using 45mm x 10g Tek self drilling screw. (corrosion resistant)

Floating 20mm Tongue & Groove Particle Board Flooring Layer
Fix 20mm Tongue & groove Particle board Flooring across the Acoustic Channels using 45mm x 8g timber thread self-drilling screws (corrosion resistant).

Fastening Centres (Both flooring layers)
Fix at 200mm centres along each joist or channel. Fasteners to be placed at 15mm min at long sheet edges and from transverse edges. Fastener edge distance of 50mm to be maintained at sheet corners.

Flooring Void
AcoustiFlor™ Acoustic Cradles are to be positioned on the tongue & groove particle board flooring at 450mm centres max starting from the edge of the room. The Acoustic Cradles need not be aligned with the steel floor joists and can be laid in either direction.

The Cradles are not to be fixed down to the bottom flooring layer.

AcoustiFlor™ Structural Battens to be placed inside the AcoustiFlor™ Acoustic Cradles at 400mm centres maximum.

Flooring Void Sound Absorber
Install 50mm thick R1.2 sound absorber with a minimum density of 9.6kg/m^3 between the AcoustiFlor™ Structural Battens.

Floating Floor
The 20mm Tongue & groove Particle board Flooring is to be laid at right angles to AcoustiFlor™ Structural Batten and fixed at 200mm centres along the batten. Lay the sheets in a staggered pattern. Flooring edges other than Tongue and groove to be supported by battens. When using the site cut sheet pieces, the minimum length of the cut sheet to be used must be 900mm or more.

Allow 5mm gap where 20mm Particle board flooring sheet edges butt into the external/internal walls. Fill the gap with fire retardant acoustic sealant.

Acoustic Clip and Battens
The Acoustic Clip shall be fastened to the joists at 1200mm centres maximum (and no less than 900mm centres) to support the metal ceiling battens which are spaced at 600mm centres maximum.

Use 3 x 30mm x 10g Drill-Point Wafer Head Screws. Insert first screw into the middle slot. Adjust clip to correct height. Then insert remaining two screws. A minimum 10mm gap is recommended between the flange of the ceiling batten and the underside of the joist.

Ceiling Void Sound Absorber
Install minimum 75mm thick R1.8 sound absorber with a minimum density of 9.6kg/m^3 between the joists above the metal ceiling battens.

EPB Plasterboard Ceiling Lining
NB: The installer must look for the Product Identification Code on the face paper to ensure the correct board type is installed. Refer to the Face Paper Product Identification Code table on this page.

Two layers of EPB® Plasterboard as per specified system above, fixed at right angles to the metal ceiling battens. All sheet end butt joints shall occur on the battens. Offset the outer layer by 600mm from the inner layer. Sheet joints should be touched fitted.

Fixing of EPB Plasterboard Internal Linings
Fasteners (As per Specified System Above)

System Number	1st Layer	2nd Layer
	Self-Tapping Drywall Screws	
EFP2DFsA45-F26	13mm	13mm
EFP2DFsA45-M26	32mm x 6g	41mm x 6g

Fastening Centres
Ceiling sheets shall be fixed at 200mm centres along each metal ceiling batten.

Fix butt ends at 100mm centres.

Fasteners to be placed no closer than 12mm from sheet edge.

Avoid outer layer screws from hitting inner layer screws.

Acoustic Sealant
A bead of fire retardant Acoustic Sealant must be applied around the perimeter of the first layer and the second layer bedded on the bead.

Wall/Ceiling Junction
The internal angle between the ceilings and walls must be protected by Cornice or square stopped corners taped and filled in accordance with EPB® Plasterboard Installation Guide.

Jointing
Inner layer: Unstopped.

Outer Layer: All fastener heads stopped and all sheet joints reinforced with paper jointing tape and stopped in accordance with the publication entitled EPB® Plasterboard Installation Guide.

Additional Reference Material
Refer to Particle board manufacturer's Technical Manuals for additional information about covering general and wet area installation and penetrations.

***Impact Insulation Class (IIC)**
IIC of 55 is achieved with a bare floor.

IIC of 56 is achieved with loose laid Vinyl.

IIC of 70 is achieved with 40oz loop pile carpet on 8mm foam chip underlay.

IIC of 72 is achieved with 40oz loop pile carpet on waffle underlay.

EFP2DFsA45 Direct Fixed Clip - Floating Particle Board Floor - Steel Joists

Load Bearing

2 Layers: 2 Layers of Plasterboard to underside of frame

Full Intertenancy
Acoustic

System Number	Lining Suffix	FRR	Load Bearing Ability	Noise Control			Lining Requirement
				STC	Rw	IIC*	
EFP2DFsA45	-F26	45/45/45	LB	63	62	55-72	2 x 13mm EPB FireSmart®
	-M26	45/45/45	LB	64	63	55-72	2 x 13mm EPB BraceSmart®/NoiseSmart®

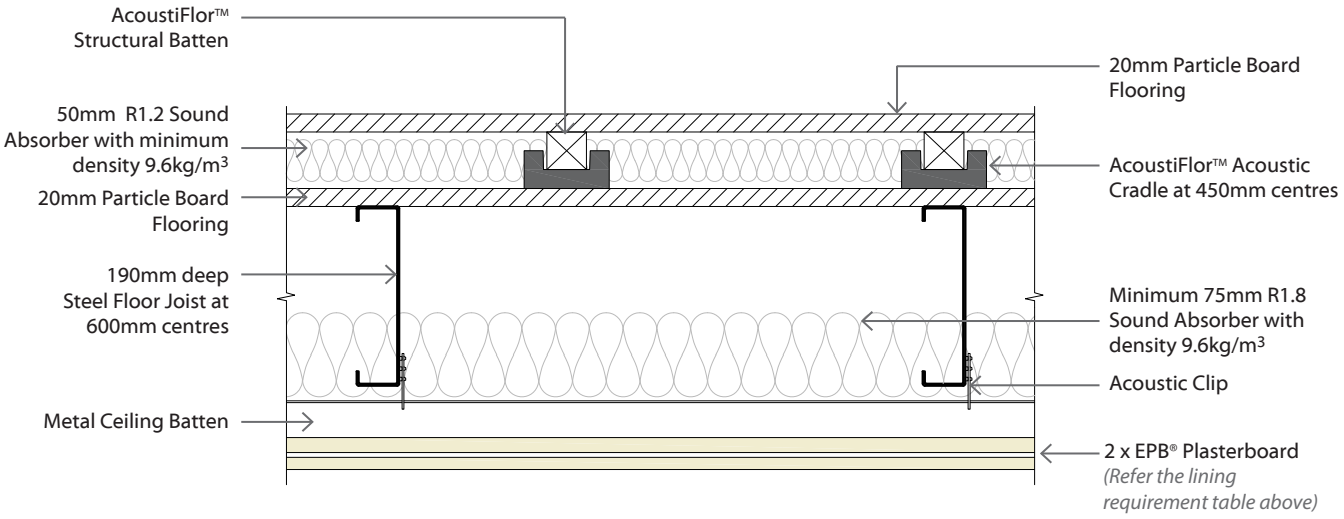

ENS-314

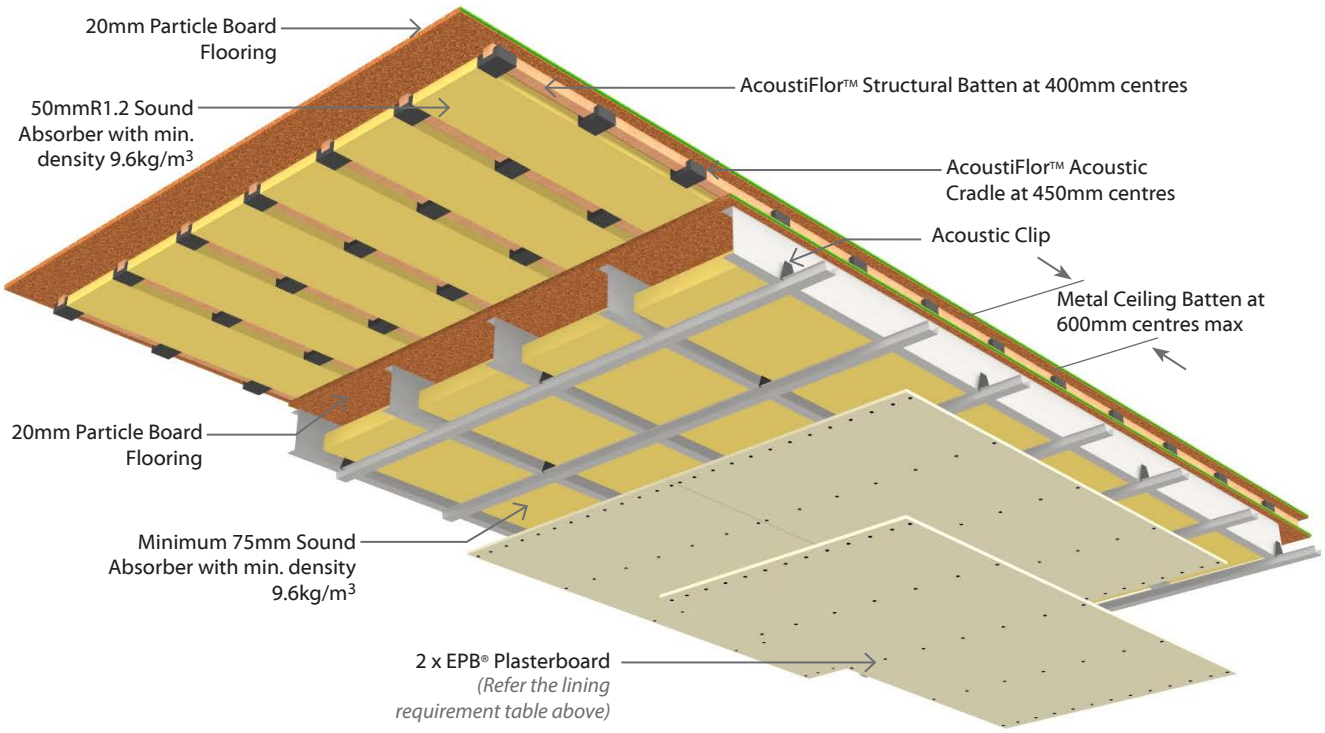

Face Paper Product Identification Code	
13mm EPB FireSmart®	F13
13mm EPB BraceSmart®/NoiseSmart®	M13

EFJ2DFsA60 Direct Fixed Clip - Floating James Hardie Secura™ Floor - Steel Joists

Load Bearing

2 Layers: 2 Layers of Plasterboard to underside of frame

Full Intertenancy
Acoustic

System Number	Lining Suffix	FRR	Load Bearing Ability	Noise Control			Lining Requirement
				STC	Rw	IIC*	
EFJ2DFsA60	**-F29**	60/60/60	LB	67	66	56-76	1 x 16mm EPB FireSmart® And 1 x 13mm EPB FireSmart®

Floor Framing
A specifically designed steel floor structure with C-section steel floor joists of 190mm minimum depth and with 45mm flanges with a steel gauge of 1.55mm. Joist spacing's at no more than 600mm centres.

Initial Floor
19mm thick James Hardie Secura™ Interior Flooring laid at right angles to the steel joists in a staggered pattern in accordance to James Hardie Secura™ Interior Flooring Installation Manual. Flooring sheet joints must have a tongue and groove jointer or be formed over framing. When using the site cut sheet pieces, the minimum length of the cut sheet to be used must be 900mm or more.

Adhesive Requirement (Both flooring layers)
A continuous 6mm bead of Adhesive to be applied over the joists or channels before laying the flooring materials.

Suitable Adhesive options are:

- Bostik Seal n Flex-1 or
- Holdfast 220LM or
- Sikaflex 11FC

Fasteners
Initial Secura Floor Layer

Fix Secura™ Interior Flooring across the joists using 8-10g x 40-45mm wing tek min. class 3 coating screws.

Floating Secura Floor Layer

Fix Secura™ Interior Flooring across the Acoustic Channels using 50mm x 10g self-tapping steel screws.

Fastening Centres (Both flooring layers)
Fix at 200mm centres along each joist or channel. Fasteners to be placed at 25mm min at long sheet edges and 12mm from transverse edges. Fastener edge distance of 50mm to be maintained at sheet corners.

Flooring Void
James Hardie Acoustic Cradles are to be positioned on the James Hardie Secura™ Interior Flooring at 450mm centres max starting from the edge of the room. The Acoustic Cradles need not be aligned with the steel floor joists and can be laid in either direction.

The Cradles are not to be fixed down to the bottom flooring layer.

James Hardie Acoustic Floor Channels to be placed inside the Acoustic Cradles. Acoustic Channels are spaced at 450mm centres maximum.

Flooring Void Sound Absorber
Install 50mm thick R1.2 sound absorber with a minimum density of 9.6kg/m^3 between the James Hardie Acoustic Floor Channels.

Floating Floor
James Hardie Secura™ Interior Flooring to be laid at right angles to the acoustic channels and fixed at 200mm centres along the channel. Lay the sheets in a staggered pattern. Flooring edges other than tongue and groove must be supported by channels.

Allow 5-8mm gap where Secura™ Interior Flooring edges butt into the external/ internal walls. Fill the gaps with an acoustic sealant.

Acoustic Clip and Battens
The Acoustic Clip shall be fastened to the joists at 1200mm centres maximum (and no less than 900mm centres) to support the metal ceiling battens which are spaced at 600mm centres maximum.

Use 3 x 30mm x 10g Drill-Point Wafer Head Screws. Insert first screw into the middle slot. Adjust clip to correct height. Then insert remaining two screws. A minimum 10mm gap is recommended between the flange of the ceiling batten and the underside of the joist.

Ceiling Void Sound Absorber
Install minimum 75mm thick R1.8 sound absorber with a minimum density of 9.6kg/m^3 between the joists above the metal ceiling battens.

EPB Plasterboard Ceiling Lining
NB: The installer must look for the Product Identification Code on the face paper to ensure the correct board type is installed. Refer to the Face Paper Product Identification Code table on this page.

One layer of 16mm EPB FireSmart® and One layer of 13mm EPB FireSmart® fixed at right angles to the metal ceiling battens. All sheet end butt joints shall occur on the battens. Offset the outer layer by 600mm from the inner layer. Sheet joints should be touched fitted.

Fixing of EPB Plasterboard Internal Linings
Fasteners

System Number	1st Layer	2nd Layer
	Self-Tapping Drywall Screws	
EFJ2DFsA60-F29	16mm	13mm
	32 x 6g	41 x 6g

Fastening Centres

Ceiling sheets shall be fixed at 200mm centres along each metal ceiling batten.

Fix butt ends at 100mm centres.

Fasteners to be placed no closer than 12mm from sheet edge.

Avoid outer layer screws from hitting inner layer screws.

Acoustic Sealant
A bead of fire retardant Acoustic Sealant must be applied around the perimeter of the first layer and the second layer bedded on the bead.

Wall/Ceiling Junction
The internal angle between the ceilings and walls must be protected by Cornice or square stopped corners taped and filled in accordance with EPB® Plasterboard Installation Guide.

Jointing
Inner layer: Unstopped.

Outer Layer: All fastener heads stopped and all sheet joints reinforced with paper jointing tape and stopped in accordance with the publication entitled EPB® Plasterboard Installation Guide.

Additional Reference Material
Refer to James Hardie Secura™ Interior Flooring Installation Manual and the James Hardie Fire and Acoustic Floor System Installation Manual for additional information about covering general and wet area installation and penetrations and control joints.

***Impact Insulation Class (IIC)**

IIC of 56 is achieved with a bare floor.

IIC of 57 is achieved with loose laid Vinyl.

IIC of 75 is achieved with 40oz loop pile carpet on 8mm foam chip underlay.

IIC of 76 is achieved with 40oz loop pile carpet on waffle underlay.

EFJ2DFsA60 Direct Fixed Clip - Floating James Hardie Secura™ Floor - Steel Joists | Load Bearing

2 Layers: 2 Layers of Plasterboard to underside of frame | Full Intertenancy **A**coustic

System Number	Lining Suffix	FRR	Load Bearing Ability	Noise Control			Lining Requirement
				STC	Rw	IIC*	
EFJ2DFsA60	**-F29**	60/60/60	LB	67	66	56-76	1 x 16mm EPB FireSmart® And 1 x 13mm EPB FireSmart®

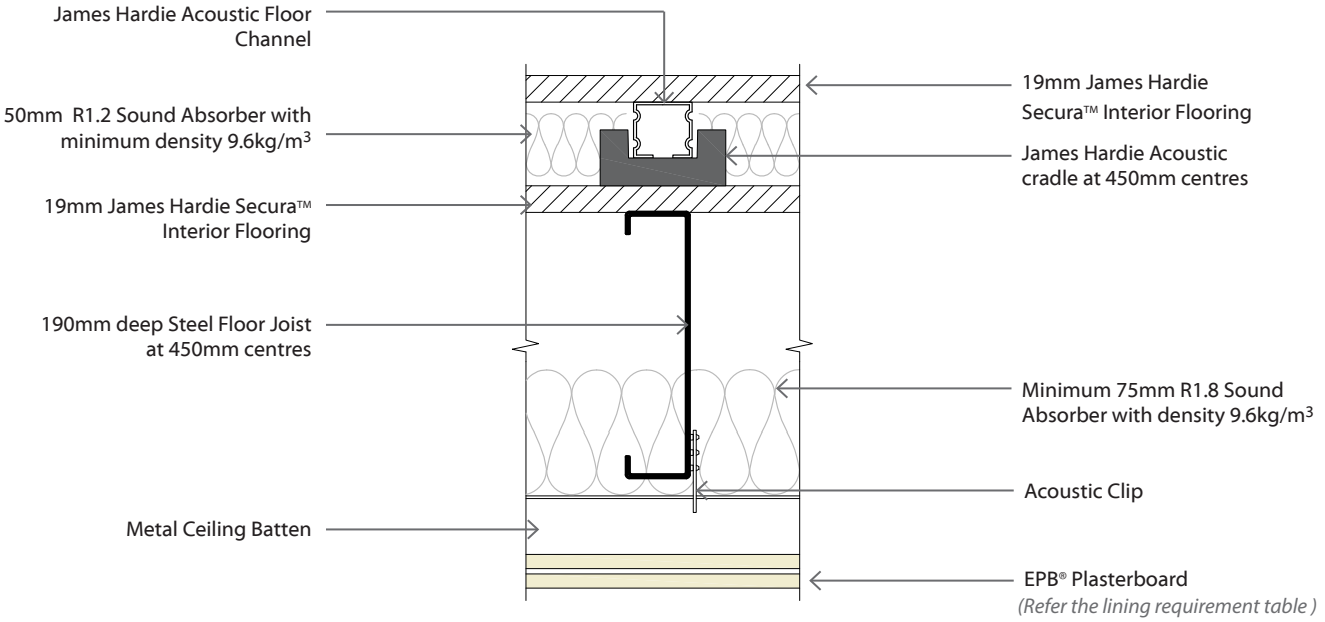

ENS-313

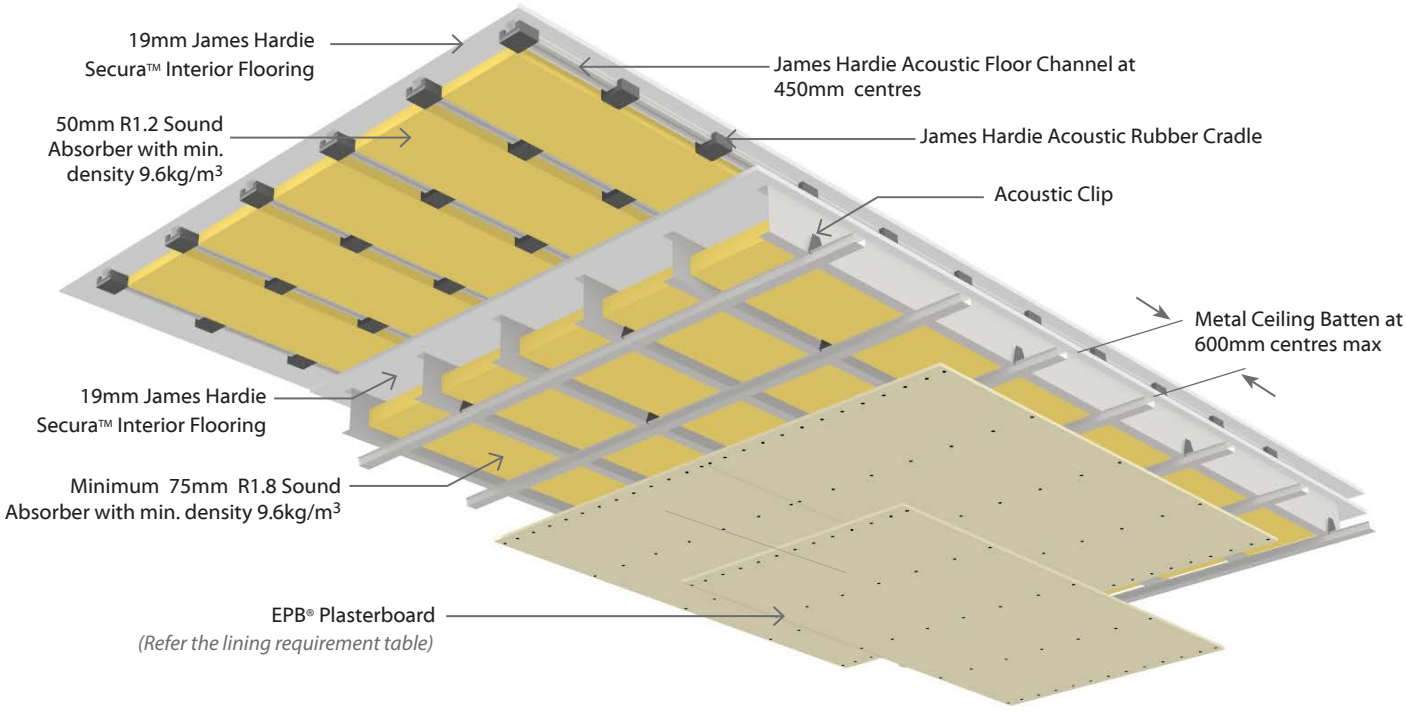

Face Paper Product Identification Code	
13mm EPB FireSmart®	**F13**
16mm EPB FireSmart®	**F16**

EFP2DFsA60 Direct Fixed Clip - Floating Particle Board Floor - Steel Joists

Load Bearing

2 Layers: 2 Layers of Plasterboard to underside of frame

Full Intertenancy
Acoustic

System Number	Lining Suffix	FRR	Load Bearing Ability	Noise Control			Lining Requirement
				STC	Rw	IIC*	
EFP2DFsA60	**-F29**	60/60/60	LB	64	63	56-72	1 x 16mm EPB FireSmart® And 1 x 13mm EPB FireSmart®

Framing
A specifically designed steel floor structure with C-section steel floor joists of 190mm minimum depth and with 45mm flanges with a steel gauge of 1.55mm. Joist spacing's at no more than 600mm centres.

Initial Floor
20mm Tongue & groove Particle board flooring laid at right angles to the steel joists in a staggered pattern in accordance to the Particle board manufacturer's Technical Manuals. Flooring sheet joints must have a tongue and groove jointer or be formed over framing. No nogs required to support the edges of longitudinal sheets. When using the site cut sheet pieces, the minimum length of the cut sheet to be used must be 900mm or more.

Adhesive Requirement (Both flooring layers)
A continuous 6mm bead of Adhesive to be applied over the joists or channels before laying the flooring materials. Apply a 2mm bead along the tongue of the Tongue and groove panels as they are laid. Suitable Adhesive options are:

- Bostik Seal n Flex-1 or
- HB Fuller-Sturdi Bond
- Holdfast 220LM or
- Sikaflex 11FC

Fasteners
Initial 20mm Tongue & Groove Particle Board Flooring Layer
Fix 20mm Tongue & groove Particle board Flooring across the joists using 45mm x 10g Tek self drilling screw. (corrosion resistant)

Floating 20mm Tongue & Groove Particle Board Flooring Layer
Fix 20mm Tongue & groove Particle board Flooring across the Acoustic Channels using 45mm x 8g timber thread self-drilling screws (corrosion resistant).

Fastening Centres (Both flooring layers)
Fix at 200mm centres along each joist or channel. Fasteners to be placed at 15mm min at long sheet edges and from transverse edges. Fastener edge distance of 50mm to be maintained at sheet corners.

Flooring Void
AcoustiFlor™ Acoustic Cradles are to be positioned on the tongue & groove particle board flooring at 450mm centres max starting from the edge of the room. The Acoustic Cradles need not be aligned with the steel floor joists and can be laid in either direction.

The Cradles are not to be fixed down to the bottom flooring layer.

AcoustiFlor™ Structural Battens to be placed inside the AcoustiFlor™ Acoustic Cradles at 400mm centres maximum.

Flooring Void Sound Absorber
Install 50mm thick R1.2 sound absorber with a minimum density of 9.6kg/m^3 between the AcoustiFlor™ Structural Battens.

Floating Floor
The 20mm Tongue & groove Particle board Flooring is to be laid at right angles to AcoustiFlor™ Structural Batten and fixed at 200mm centres along the batten. Lay the sheets in a staggered pattern. Flooring edges other than Tongue and groove to be supported by battens. When using the site cut sheet pieces, the minimum length of the cut sheet to be used must be 900mm or more.

Allow 5mm gap where 20mm Particle board Flooring sheet edges butt into external/internal walls. Fill the gap with fire retardant acoustic sealant.

Acoustic Clip and Battens
The Acoustic Clip shall be fastened to the joists at 1200mm centres maximum (and no less than 900mm centres) to support the metal ceiling battens which are spaced at 600mm centres maximum.

Use 3 x 30mm x 10g Drill-Point Wafer Head Screws. Insert first screw into the middle slot. Adjust clip to correct height. Then insert remaining two screws. A minimum 10mm gap is recommended between the flange of the ceiling batten and the underside of the joist.

Ceiling Void Sound Absorber
Install minimum 75mm thick R1.8 sound absorber with a minimum density of 9.6kg/m^3 between the joists above the metal ceiling battens.

EPB Plasterboard Ceiling Lining
NB: The installer must look for the Product Identification Code on the face paper to ensure the correct board type is installed. Refer to the Face Paper Product Identification Code table on this page.

One layer of 16mm EPB FireSmart® and One layer of 13mm EPB FireSmart® fixed at right angles to the metal ceiling battens. All sheet end butt joints shall occur on the battens. Offset the outer layer by 600mm from the inner layer. Sheet joints should be touched fitted.

Fixing of EPB Plasterboard Internal Linings
Fasteners

System Number	1st Layer	2nd Layer
	Self-Tapping Drywall Screws	
EFP2DFsA60-F29	16mm	13mm
	32mm x 6g	41mm x 6g

Fastening Centres
Ceiling sheets shall be fixed at 200mm centres along each metal ceiling batten.

Fix butt ends at 100mm centres.

Fasteners to be placed no closer than 12mm from sheet edge.

Avoid outer layer screws from hitting inner layer screws.

Acoustic Sealant
A bead of fire retardant Acoustic Sealant must be applied around the perimeter of the first layer and the second layer bedded on the bead.

Wall/Ceiling Junction
The internal angle between the ceilings and walls must be protected by Cornice or square stopped corners taped and filled in accordance with EPB® Plasterboard Installation Guide.

Jointing
Inner layer: Unstopped.

Outer Layer: All fastener heads stopped and all sheet joints reinforced with paper jointing tape and stopped in accordance with the publication entitled EPB® Plasterboard Installation Guide.

Additional Reference Material
Refer to Particle board manufacturer's Technical Manuals for additional information about covering general and wet area installation and penetrations.

***Impact Insulation Class (IIC)**
IIC of 56 is achieved with a bare floor.

IIC of 57 is achieved with loose laid Vinyl.

IIC of 70 is achieved with 40oz loop pile carpet on 8mm foam chip underlay.

IIC of 72 is achieved with 40oz loop pile carpet on waffle underlay.

EFP2DFsA60 Direct Fixed Clip - Floating Particle Board Floor - Steel Joists

Load Bearing

2 Layers: 2 Layers of Plasterboard to underside of frame

Full Intertenancy
Acoustic

System Number	Lining Suffix	FRR	Load Bearing Ability	Noise Control			Lining Requirement
				STC	Rw	IIC*	
EFP2DFsA60	**-F29**	60/60/60	LB	64	63	56-72	1 x 16mm EPB FireSmart® And 1 x 13mm EPB FireSmart®

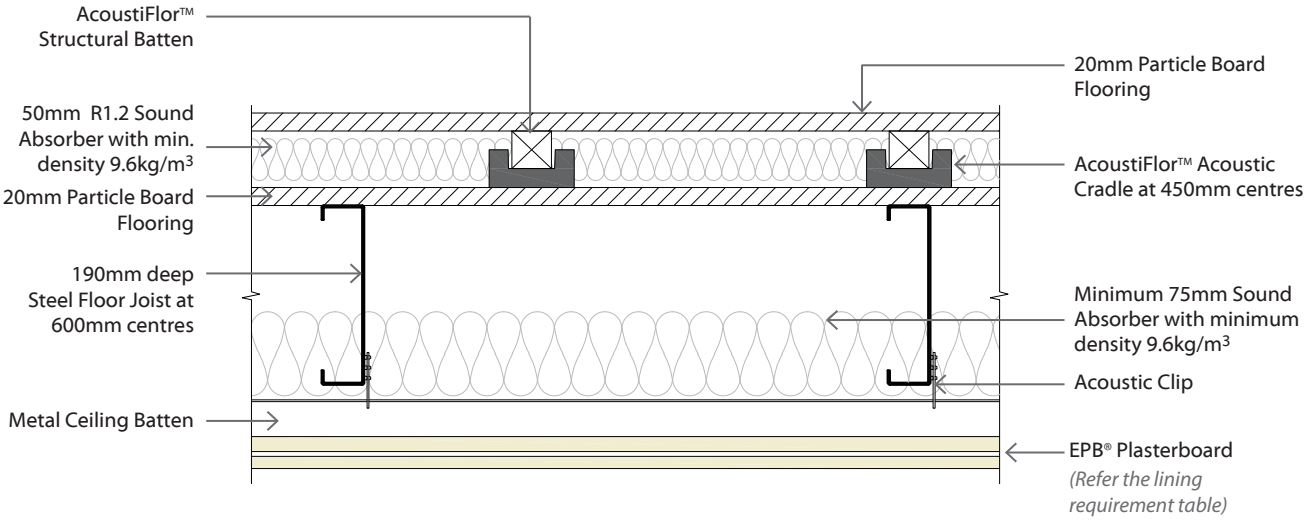

ENS-314

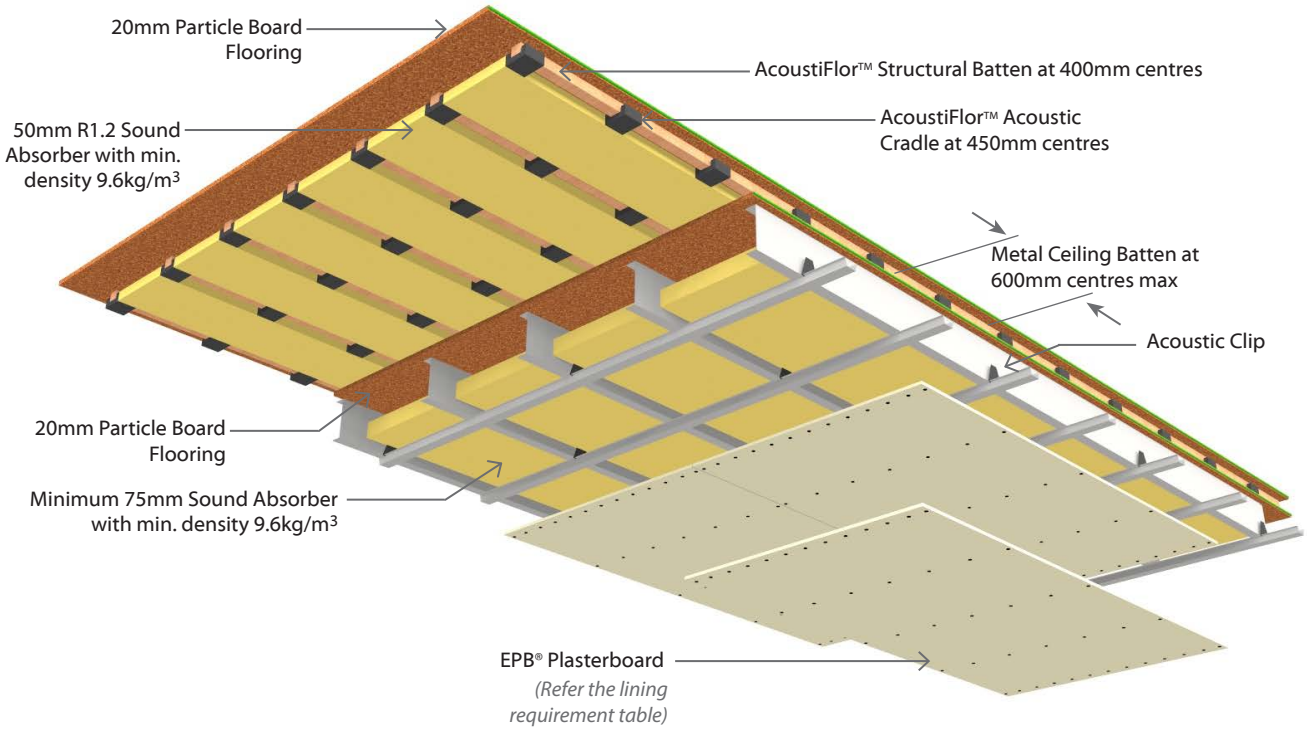

Face Paper Product Identification Code	
13mm EPB FireSmart®	**F13**
16mm EPB FireSmart®	**F16**

E2DFA60 Direct Fixed Clip - Floor/Ceiling | Load Bearing

2 Layers: 2 Layers of Plasterboard to underside of frame | Full Intertenancy **A**coustic

System Number	Lining Suffix	FRR	Load Bearing Ability	Noise Control			Lining Requirement
				STC	Rw	IIC*	
E2DFA60	-FS26	60/60/60	LB	56	55	46-73	1 x 13mm EPB FireSmart® And 1 x 13mm EPB® Standard
	-F26	60/60/60	LB	57	56	46-73	2 x 13mm EPB FireSmart®
	-M26	60/60/60	LB	58	57	46-73	2 x 13mm EPB BraceSmart®/NoiseSmart®

Framing

Timber floor joists shall comply with NZS3604 with a minimum depth of 190 x 45mm and spaced at no more than 600mm centres. Alternatively, a proprietary I-joist system with a minimum depth of 190mm and spaced at no more than 600mm centres may be used subject to specific structural design and approved by the normal building consent process.

Consult the joist manufacturer regarding construction of the solid blocking contained in the floor/ceiling to wall junctions.

Flooring

Flooring shall be 20mm thick particle board of 17mm thick structural ply, fixed to the joists as per manufacturer's instructions. Flooring sheet joints must have a polypropylene tongue and groove jointer or be formed over framing.

Acoustic Clip and Battens

The Acoustic Clip shall be fastened to the joists at 1200mm centres maximum (and no less than 900mm centres) to support the metal ceiling battens which are spaced at 600mm centres maximum. Use 3 x 32mm x 8g Wafer Head screws. Insert first screw into the middle slot. Adjust clip to correct height. Then insert remaining two screws. A minimum 10mm gap is recommended between the flange of the ceiling batten and the underside of the joist.

Ceiling Sound Absorber

Install Sound Absorber between the joists above the metal ceiling battens. Use minimum 75mm thick R1.8 glass wool blanket.

N.B. Consider Minimum Thermal Requirements.

Plasterboard Lining

NB: The installer must look for the Product Identification Code on the face paper to ensure the correct board type is installed. Refer to the Face Paper Product Identification Code table on this page.

Two layers of EPB® Plasterboard as per specified system above, fixed at right angles to the metal ceiling battens. All sheet end butt joints shall occur on the battens. Offset the outer layer by 600mm from the inner layer. Sheet joints should be touched fitted.

Fixing the Lining

Fasteners

System Number	1st Layer	2nd Layer
	Self-Tapping Drywall Screws	
E2DFA60-FS26 E2DFA60-F26 E2DFA60-M26	13mm	13mm
	25 x 6g	41 x 6g

Fastening Centres

Ceiling sheets shall be fixed at 200mm centres along each metal ceiling batten.

Fix butt ends at 100mm centres.

Fasteners to be placed no closer than 12mm from sheet edge.

Avoid outer layer screws from hitting inner layer screws.

Acoustic Sealant

A bead of fire retardant Acoustic Sealant must be applied around the perimeter of the first layer and the second layer bedded on the bead.

Wall/Ceiling Junction

The internal angle between the ceilings and walls must be protected by Cornice or square stopped corners taped and filled in accordance with EPB® Plasterboard Installation Guide.

Jointing

Inner layer: Unstopped.

Outer Layer: All fastener heads stopped and all sheet joints reinforced with paper jointing tape and stopped in accordance with the publication entitled EPB® Plasterboard Installation Guide.

***Impact Insulation Class (IIC)**

IIC of 46 is achieved with a bare floor.

IIC of 47 is achieved with loose laid Vinyl.

IIC of 71 is achieved with 40oz cut pile carpet on 8mm foam chip underlay.

IIC of 73 is achieved with 40oz loop pile carpet on waffle underlay.

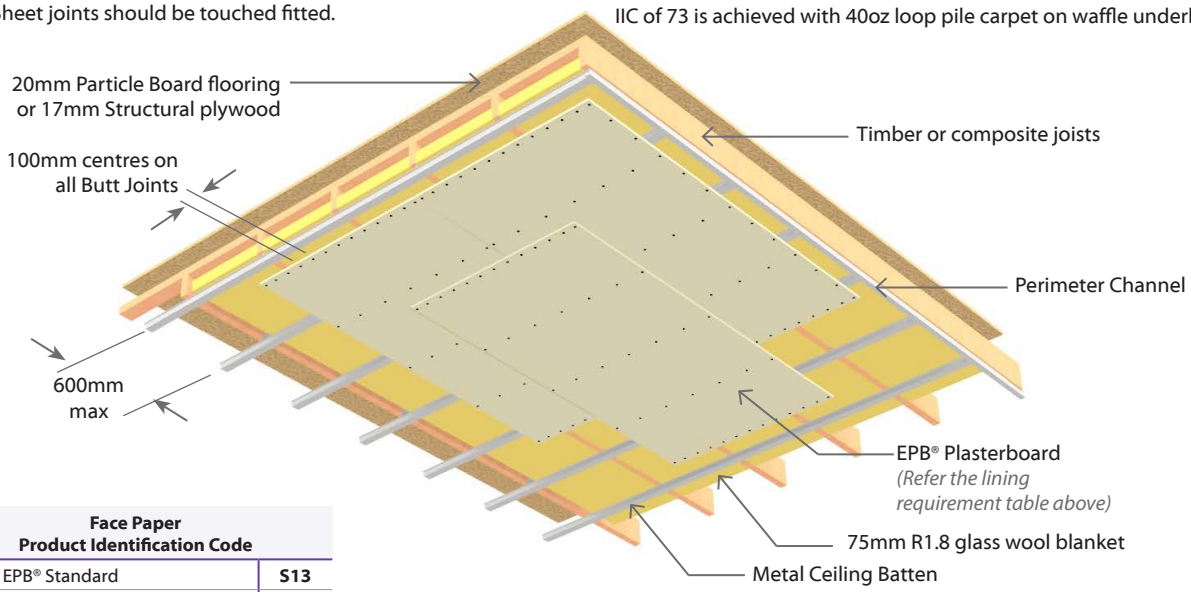

Face Paper Product Identification Code	
13mm EPB® Standard	S13
13mm EPB FireSmart®	F13
13mm EPB BraceSmart®/NoiseSmart®	M13

E2DFA90 Direct Fixed Clip - Floor/Ceiling Load Bearing

2 Layers: 2 Layers of Plasterboard to underside of frame

Full Intertenancy Acoustic

System Number	Lining Suffix	FRR	Load Bearing Ability	Noise Control			Lining Requirement
				STC	Rw	IIC*	
E2DFA90	-F29	90/90/90	LB	57	56	47-73	1 x 16mm EPB FireSmart® and 1 x 13mm EPB FireSmart ®
	-F32	90/90/90	LB	58	57	47-73	2 x 16mm EPB FireSmart®

Framing

Timber floor joists shall comply with NZS3604 with a minimum depth of 190 x 45mm and spaced at no more than 600mm centres. Alternatively, a proprietary I-joist system with a minimum depth of 190mm and spaced at no more than 600mm centres may be used subject to specific structural design and approved by the normal building consent process.

Consult the joist manufacturer regarding construction of the solid blocking contained in the floor/ceiling to wall junctions.

Flooring

Flooring shall be 20mm thick particle board of 17mm thick structural ply, fixed to the joists as per manufacturer's instructions. Flooring sheet joints must have a polypropylene tongue and groove jointer or be formed over framing.

Acoustic Clip and Battens

The Acoustic Clip shall be fastened to the joists at 1200mm centres maximum (and no less than 900mm centres) to support the metal ceiling battens which are spaced at 600mm centres maximum. Use 3 x 32mm x 8g Wafer Head screws. Insert first screw into the middle slot. Adjust clip to correct height. Then insert remaining two screws. A minimum 10mm gap is recommended between the flange of the ceiling batten and the underside of the joist.

Ceiling Sound Absorber

Install Sound Absorber between the joists above the metal ceiling battens. Use minimum 75mm thick R1.8 glass wool blanket.

N.B. Consider Minimum Thermal Requirements.

Plasterboard Lining

NB: The installer must look for the Product Identification Code on the face paper to ensure the correct board type is installed. Refer to the Face Paper Product Identification Code table on this page.

Two layers of EPB® Plasterboard as per specified system above fixed at right angles to the metal ceiling battens. All sheet end butt joints shall occur on the battens. Offset the outer layer by 600mm from the inner layer. Sheet joints should be touched fitted.

Fixing the Lining

Fasteners (As per Specified System Above)

System Number	1st Layer	2nd Layer
	Self-Tapping Drywall Screws	
E2DFA90-F29	16mm	13mm
	32 x 6g	41 x 6g
E2DFA90-F32	16mm	16mm
	32 x 6g	51 x 7g

Fastening Centre

Ceiling sheets shall be fixed at 200mm centres along each metal ceiling batten.

Fix butt ends at 100mm centres.

Fasteners to be placed no closer than 12mm from sheet edge.

Avoid outer layer screws from hitting inner layer screws.

Acoustic Sealant

A bead of fire retardant Acoustic Sealant must be applied around the perimeter of the first layer and the second layer bedded on the bead.

Wall/Ceiling Junction

The internal angle between the ceilings and walls must be protected by Cornice or square stopped corners taped and filled in accordance with EPB® Plasterboard Installation Guide.

Jointing

Inner layer: Unstopped.

Outer Layer: All fastener heads stopped and all sheet joints reinforced with paper jointing tape and stopped in accordance with the publication entitled EPB® Plasterboard Installation Guide.

***Impact Insulation Class (IIC)**

IIC of 47 is achieved with a bare floor.

IIC of 48 is achieved with loose laid Vinyl.

IIC of 71 is achieved with 40oz loop pile carpet on 8mm foam chip underlay.

IIC of 73 is achieved with 40oz loop pile carpet on waffle underlay.

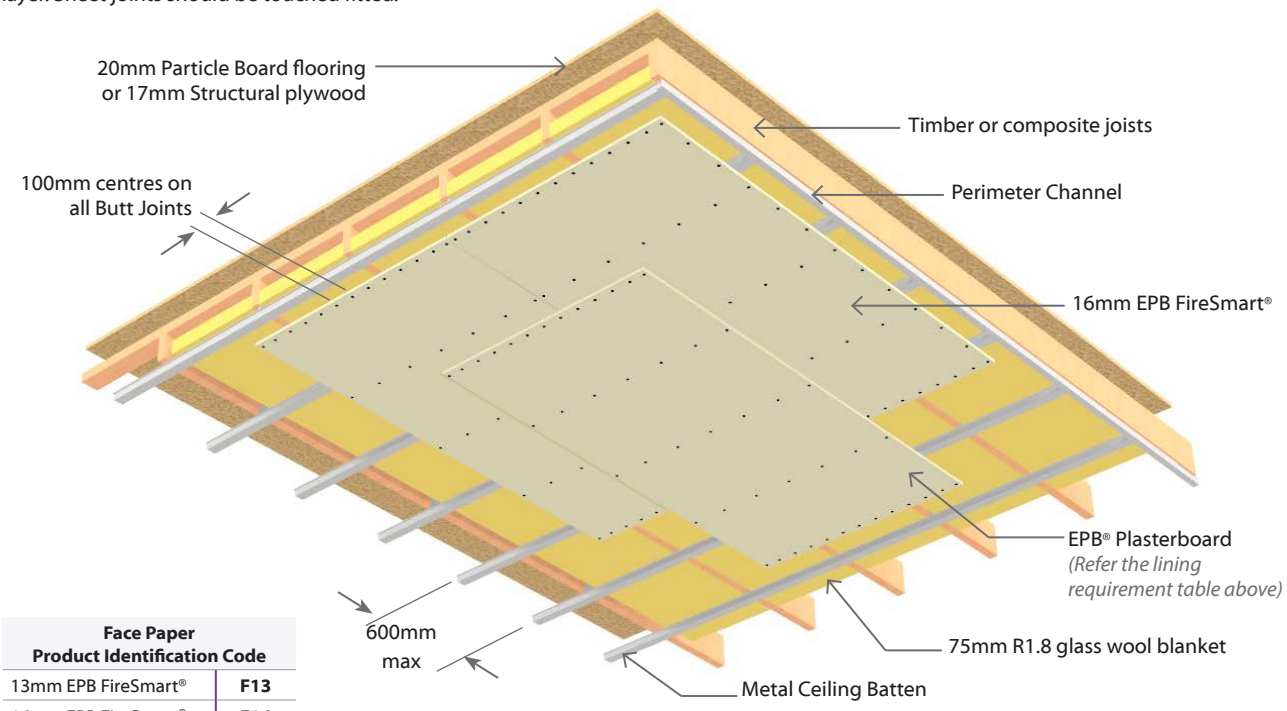

Face Paper Product Identification Code	
13mm EPB FireSmart®	F13
16mm EPB FireSmart®	F16

E2SCA60 Suspended Grid - Floor/Ceiling — Load Bearing

2 Layers: 2 Layers of Plasterboard to underside of frame — Full Intertenancy **A**coustic

System Number	Lining Suffix	FRR	Load Bearing Ability	Noise Control			Lining Requirement
				STC	Rw	IIC*	
E2SCA60	-MS26	60/60/60	LB	56	55	40-72	1 x 13mm EPB BraceSmart®/NoiseSmart® and 1 x 13mm EPB® Standard
	-F26	60/60/60	LB	56	55	40-72	2 x 13mm EPB FireSmart®
	-M26	60/60/60	LB	56	55	40-72	2 x 13mm EPB BraceSmart®/NoiseSmart®

Framing
Timber floor joists shall comply with NZS3604 with a minimum depth of 190 x 45mm and spaced at no more than 600mm centres. Alternatively, a proprietary I-joist system with a minimum depth of 190mm and spaced at no more than 600mm centres may be used subject to specific structural design and approved by the normal building consent process.

Flooring
Flooring shall be 20mm thick particle board of 17mm thick structural ply, fixed to the joists as per manufacturer's instructions. Flooring sheet joints must have a polypropylene tongue and groove jointer or be formed over framing.

Minimum Cavity Depth
The system requires a minimum of 275mm cavity depth between the ceiling linings and the underside of the flooring.

Suspension System
Rondo ScrewFix® steel frame suspension system comprising of 2.5mm wire hangers at 1200mm centres supporting F38 strongback channels spaced at a maximum of 1200mm centres and F37 furring channels at 600mm centres.

Alternative suspension systems with equivalent performance characteristics and layout may be used.

Suspended Grid ceiling system to be installed as per manufacturer's specification.

Ceiling Sound Absorber
Install Sound Absorber over the suspension system. Use minimum 75mm thick R1.8 glass wool blanket.

N.B. Consider Minimum Thermal Requirements.

Plasterboard Lining
NB: The installer must look for the Product Identification Code on the face paper to ensure the correct board type is installed. Refer to the Face Paper Product Identification Code table on this page.

Two layers of EPB® Plasterboard as per specified system above, fixed at right angles to metal furring channels. Offset the joints of the outer layer by 600mm from those of the inner layer.

All sheet butt joints should occur on the furring channel.

Sheet joints shall be touched fitted.

Face Paper Product Identification Code	
13mm EPB® Standard	S13
13mm EPB FireSmart®	F13
13mm EPB BraceSmart®/NoiseSmart®	M13

Fixing the Lining
Fasteners

System Number	1st Layer	2nd Layer
	Self-Tapping Drywall Screws	
E2SCA60-MS26 E2SCA60-F26 E2SCA60-M26	13mm	13mm
	25 x 6g	41 x 6g

Fastening Centres

Ceiling sheets shall be fixed at 200mm centres along each furring channel and around the ceiling perimeter.

Fix at 100mm centres where end butt joints occur.

Fasteners to be placed no closer than 12mm from sheet edge.

Avoid outer layer screws from hitting inner layer screws.

Acoustic Sealant
A bead of Acoustic Sealant must be applied on the inner layer around the perimeter of the ceiling. The outer layer is then bedded into the bead.

Wall/Ceiling Junction
The internal angle between the ceilings and walls must be protected by Cornice or square stopped corners taped and filled in accordance with EPB® Plasterboard Installation Guide.

Jointing
Inner layer: Unstopped.

Outer Layer: All fastener heads stopped and all sheet joints reinforced with paper jointing tape and stopped in accordance with the publication entitled EPB® Plasterboard Installation Guide.

***Impact Insulation Class (IIC)**

IIC of 40 is achieved with a bare floor.

IIC of 42 is achieved with loose laid Vinyl.

IIC of 71 is achieved with 40oz loop pile carpet on 8mm foam chip underlay.

IIC of 72 is achieved with 40oz loop pile carpet on waffle underlay.

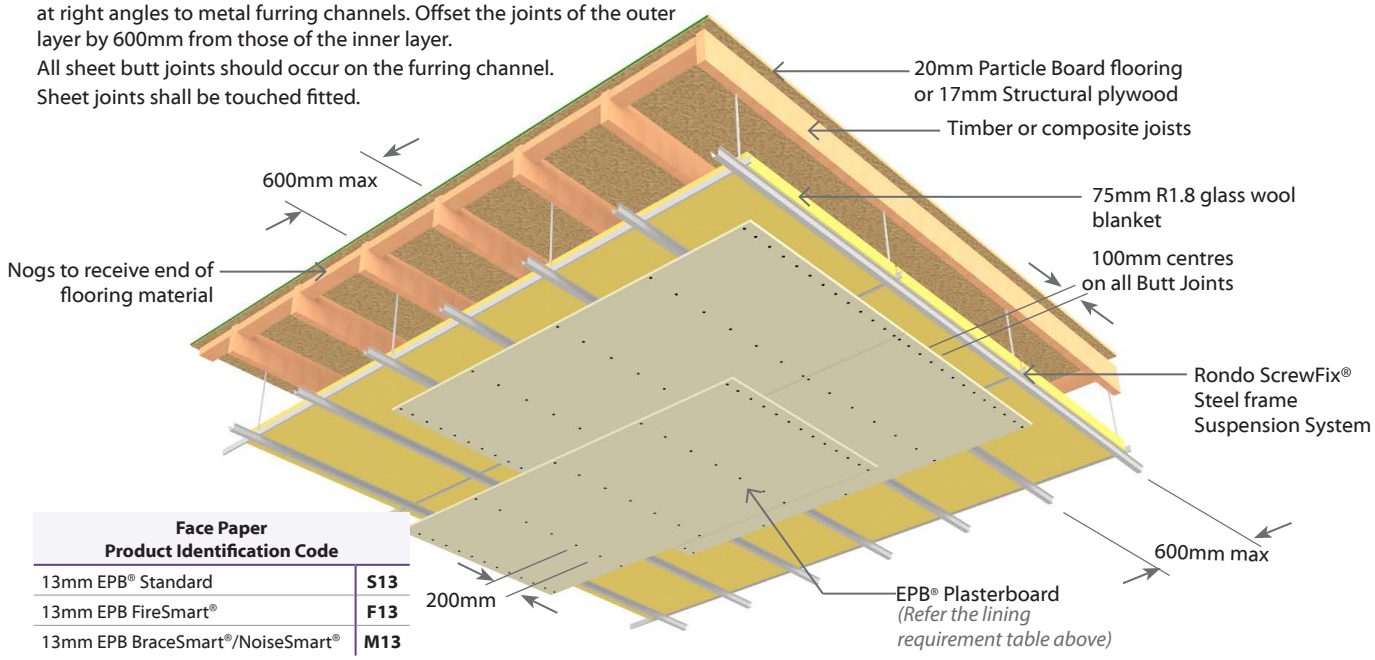

E2SCA75 Suspended Grid - Floor/Ceiling Load Bearing

2 Layers: 2 Layers of Plasterboard to underside of frame

Full Intertenancy Acoustic

System Number	Lining Suffix	FRR	Load Bearing Ability	Noise Control			Lining Requirement
				STC	Rw	IIC*	
E2SCA75	**-F29**	75/75/75	LB	56	55	40-72	1 x 16mm EPB FireSmart® and 1 x 13mm EPB FireSmart®

Framing

Timber floor joists shall comply with NZS3604 with a minimum depth of 190 x 45mm and spaced at no more than 600mm centres. Alternatively, a proprietary I-joist system with a minimum depth of 190mm and spaced at no more than 600mm centres may be used subject to specific structural design and approved by the normal building consent process.

Flooring

Flooring shall be 20mm thick particle board of 17mm thick structural ply, fixed to the joists as per manufacturer's instructions. Flooring sheet joints must have a polypropylene tongue and groove jointer or be formed over framing.

Minimum Cavity Depth

The system requires a minimum of 275mm cavity depth between the ceiling linings and the underside of the flooring.

Suspension System

Rondo ScrewFix® steel frame suspension system comprising 2.5mm wire hangers at 1200mm centres supporting F38 strongback channels spaced at a maximum of 1200mm centres and F37 furring channels at 600mm centres.

Alternative suspension systems with equivalent performance characteristics and layout may be used.

Suspended Grid ceiling system to be installed as per manufacturer's specification.

Ceiling Sound Absorber

Install Sound Absorber over the suspension system. Use minimum 75mm thick R1.8 glass wool blanket.

N.B. Consider Minimum Thermal Requirements.

Plasterboard Lining

NB: The installer must look for the Product Identification Code on the face paper to ensure the correct board type is installed. Refer to the Face Paper Product Identification Code table on this page.

One layer of 16mm EPB FireSmart® and One layer of 13mm EPB FireSmart® fixed at right angles to metal furring channels. Offset the joints of the outer layer by 600mm from those of the inner layer. All sheet butt joints should occur on the furring channel. Sheet joints shall be touched fitted.

Fixing the Lining

Fasteners

System Number	1st Layer	2nd Layer
	Self-Tapping Drywall Screws	
E2SCA75-F29	16mm	13mm
	32 x 6g	41 x 6g

Fastening Centres

Ceiling sheets shall be fixed at 200mm centres along each furring channel and around the ceiling perimeter.

Fix at 100mm centres where end butt joints occur.

Fasteners to be placed no closer than 12mm from sheet edge.

Avoid outer layer screws from hitting inner layer screws.

Acoustic Sealant

A bead of Acoustic Sealant must be applied on the inner layer around the perimeter of the ceiling. The outer layer is then bedded into the bead.

Wall/Ceiling Junction

The internal angle between the ceilings and walls must be protected by Cornice or square stopped corners taped and filled in accordance with EPB® Plasterboard Installation Guide.

Jointing

Inner layer: Unstopped.

Outer Layer: All fastener heads stopped and all sheet joints reinforced with paper jointing tape and stopped in accordance with the publication entitled EPB® Plasterboard Installation Guide.

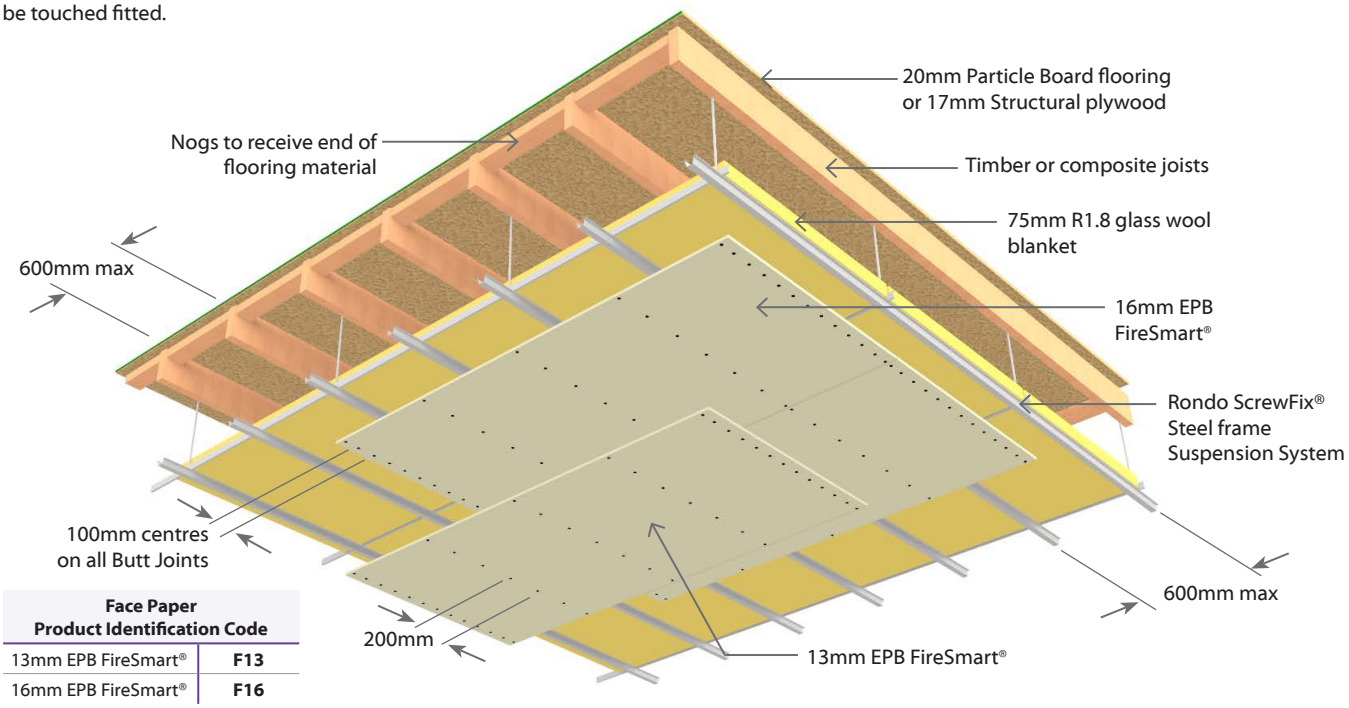

Face Paper Product Identification Code	
13mm EPB FireSmart®	**F13**
16mm EPB FireSmart®	**F16**

E2SCA90 Suspended Grid - Floor/Ceiling — Load Bearing

2 Layers: 2 Layers of Plasterboard to underside of frame — Full Intertenancy Acoustic

System Number	Lining Suffix	FRR	Load Bearing Ability	Noise Control			Lining Requirement
				STC	Rw	IIC*	
E2SCA90	**-F32**	90/90/90	LB	57	56	40-73	2 x 16mm EPB FireSmart®

Framing
Timber floor joists shall comply with NZS3604 with a minimum depth of 190 x 45mm and spaced at no more than 600mm centres. Alternatively, a proprietary I-joist system with a minimum depth of 190mm and spaced at no more than 600mm centres may be used subject to specific structural design and approved by the normal building consent process.

Flooring
Flooring shall be 20mm thick particle board of 17mm thick structural ply, fixed to the joists as per manufacturer's instructions. Flooring sheet joints must have a polypropylene tongue and groove jointer or be formed over framing.

Minimum Cavity Depth
The system requires a minimum of 275mm cavity depth between the ceiling linings and the underside of the flooring.

Suspension System
Rondo ScrewFix® steel frame suspension system comprising 2.5mm wire hangers at 1200mm centres supporting F38 strongback channels spaced at a maximum of 1200mm centres and F37 furring channels at 600mm centres.

Alternative suspension systems with equivalent performance characteristics and layout may be used.

Suspended Grid ceiling system to be installed as per manufacturer's specification.

Ceiling Sound Absorber
Install Sound Absorber over the suspension system. Use minimum 75mm thick R1.8 glass wool blanket.

N.B. Consider Minimum Thermal Requirements.

Plasterboard Lining
NB: The installer must look for the Product Identification Code on the face paper to ensure the correct board type is installed. Refer to the Face Paper Product Identification Code table on this page.

Two layers of 16mm EPB FireSmart® fixed at right angles to metal furring channels. Offset the joints of the outer layer by 600mm from those of the inner layer. All sheet butt joints should occur on the furring channel. Sheet joints shall be touched fitted.

Fixing the Lining
Fasteners (As per Specified System Above)

System Number	1st Layer	2nd Layer
	Self-Tapping Drywall Screws	
E2SCA90-F32	16mm	16mm
	32 x 6g	41 x 6g

Fastening Centres

Ceiling sheets shall be fixed at 200mm centres along each furring channel and around the ceiling perimeter.

Fix at 100mm centres where end butt joints occur.

Fasteners to be placed no closer than 12mm from sheet edge.

Avoid outer layer screws from hitting inner layer screws.

Acoustic Sealant
A bead of Acoustic Sealant must be applied on the inner layer around the perimeter of the ceiling. The outer layer is then bedded into the bead.

Wall/Ceiling Junction
The internal angle between the ceilings and walls must be protected by Cornice or square stopped corners taped and filled in accordance with EPB® Plasterboard Installation Guide.

Jointing
Inner layer: Unstopped.

Outer Layer: All fastener heads stopped and all sheet joints reinforced with paper jointing tape and stopped in accordance with the publication entitled EPB® Plasterboard Installation Guide.

***Impact Insulation Class (IIC)**

IIC of 40 is achieved with a bare floor.

IIC of 42 is achieved with loose laid Vinyl.

IIC of 72 is achieved with 40oz loop pile carpet on 8mm foam chip underlay.

IIC of 73 is achieved with 40oz loop pile carpet on waffle underlay.

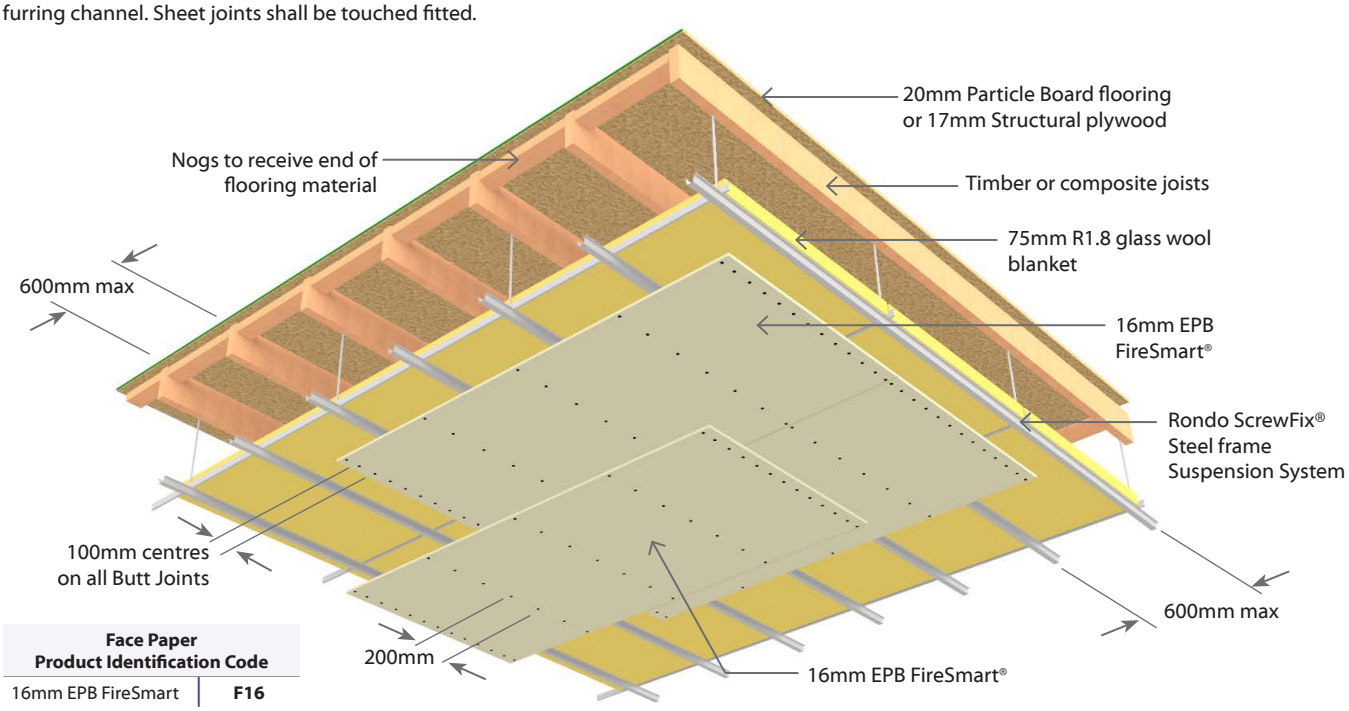

Face Paper Product Identification Code	
16mm EPB FireSmart	F16

E2DFsA45 Direct Fixed Clip - Floor/Ceiling - steel joist Load Bearing

2 Layers: 2 Layers of Plasterboard to underside of frame | Full Intertenancy Acoustic

System Number	Lining Suffix	FRR	Load Bearing Ability	Noise Control			Lining Requirement
				STC	Rw	IIC*	
E2DFsA45	-F26	45/45/45	LB	56	55	47-74	2 x 13mm EPB FireSmart®
	-M26	45/45/45	LB	57	56	47-74	2 x 13mm EPB BraceSmart®/NoiseSmart®

Framing
Steel floor joists shall be a minimum depth of 190mm C-section with 45mm flanges and a steel gauge of 1.55mm minimum. Joist spacing's at no more than 600mm centres.

Flooring
Flooring shall be 20mm thick particle board of 17mm thick structural ply, fixed to the joists as per manufacturer's instructions. Flooring sheet joints must have a polypropylene tongue and groove jointer or be formed over framing.

Acoustic Clip and Battens
The Acoustic Clip shall be fastened to the joists at 1200mm centres maximum (and no less than 900mm centres) to support the metal ceiling battens which are spaced at 600mm centres maximum.

Use 3 x 30mm x 10g Drill-Point Wafer Head Screws. Insert first screw into the middle slot. Adjust clip to correct height. Then insert remaining two screws. A minimum 10mm gap is recommended between the flange of the ceiling batten and the underside of the joist.

Ceiling Sound Absorber
Install Sound Absorber between the joists above the metal ceiling battens. Use minimum 75mm thick R1.8 glass wool blanket.

N.B. Consider Minimum Thermal Requirements.

Plasterboard Lining
NB: The installer must look for the Product Identification Code on the face paper to ensure the correct board type is installed. Refer to the Face Paper Product Identification Code table on this page.

Two layers of EPB® Plasterboard as per specified system above, fixed at right angles to the metal ceiling battens. All sheet end butt joints shall occur on the battens. Offset the outer layer by 600mm from the inner layer. Sheet joints should be touched fitted.

Fixing the Lining
Fasteners

System Number	1st Layer	2nd Layer
	Self-Tapping Drywall Screws	
E2DFsA45-F26 E2DFsA45-M26	13mm	13mm
	32 x 6g	41 x 6g

Fastening Centres

Ceiling sheets shall be fixed at 200mm centres along each metal ceiling batten.

Fix butt ends at 100mm centres.

Fasteners to be placed no closer than 12mm from sheet edge.

Avoid outer layer screws from hitting inner layer screws.

Acoustic Sealant
A bead of fire retardant Acoustic Sealant must be applied around the perimeter of the first layer and the second layer bedded on the bead.

Wall/Ceiling Junction
The internal angle between the ceilings and walls must be protected by Cornice or square stopped corners taped and filled in accordance with EPB® Plasterboard Installation Guide.

Jointing
Inner layer: Unstopped.

Outer Layer: All fastener heads stopped and all sheet joints reinforced with paper jointing tape and stopped in accordance with the publication entitled EPB® Plasterboard Installation Guide.

***Impact Insulation Class (IIC)**

IIC of 47 is achieved with a bare floor.

IIC of 48 is achieved with loose laid Vinyl.

IIC of 72 is achieved with 40oz loop pile carpet on 8mm foam chip underlay.

IIC of 74 is achieved with 40oz loop pile carpet on waffle underlay.

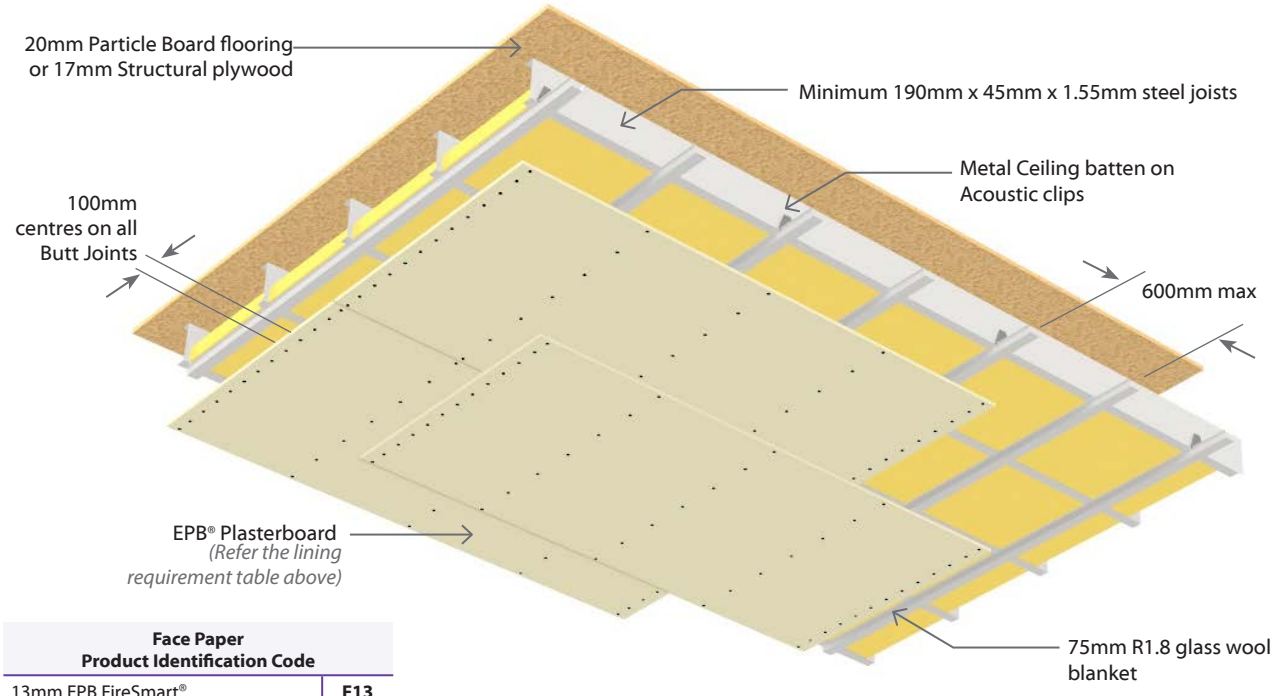

Face Paper Product Identification Code	
13mm EPB FireSmart®	F13
13mm EPB BraceSmart®/NoiseSmart®	M13

E2DFsA60 Direct Fixed Clip - Floor/Ceiling - steel joist Load Bearing

2 Layers: 2 Layers of Plasterboard to underside of frame | Full Intertenancy **A**coustic

System Number	Lining Suffix	FRR	Load Bearing Ability	Noise Control			Lining Requirement
				STC	Rw	IIC*	
E2DFsA60	**-FM29**	60/60/60	LB	57	56	47-75	1 x 16mm EPB FireSmart® and 1 x 13mm EPB BraceSmart®/NoiseSmart®
	-F32	60/60/60	LB	57	56	47-75	2 x 16mm EPB FireSmart®

Framing
Steel floor joists shall be a minimum depth of 190mm C-section with 45mm flanges and a steel gauge of 1.55mm minimum. Joist spacing's at no more than 600mm centres.

Flooring
Minimum flooring shall be nominal 20mm thick particle board or minimum 17mm thick structural plywood, fixed to the joists as per manufacturers' instructions. Flooring sheet joints must have a polypropylene tongue and groove jointer or be formed over framing.

Acoustic Clip and Battens
The Acoustic Clip shall be fastened to the joists at 1200mm centres maximum (and no less than 900mm centres) to support the metal ceiling battens which are spaced at 600mm centres maximum.

Use 3 x 30mm x 10g Drill-Point Wafer Head Screws. Insert first screw into the middle slot. Adjust clip to correct height. Then insert remaining two screws. A minimum 10mm gap is recommended between the flange of the ceiling batten and the underside of the joist.

Ceiling Sound Absorber
Install Sound Absorber between the joists above the metal ceiling battens. Use minimum 75mm thick R1.8 glass wool blanket.

N.B. Consider Minimum Thermal Requirements.

Plasterboard Lining
NB: The installer must look for the Product Identification Code on the face paper to ensure the correct board type is installed. Refer to the Face Paper Product Identification Code table on this page.

Two layers of EPB® Plasterboard as per specified system above fixed at right angles to the metal ceiling battens. All sheet end butt joints shall occur on the battens. Offset the outer layer by 600mm from the inner layer. Sheet joints should be touched fitted.

Fixing the Lining
Fasteners (As per Specified System Above)

System Number	1st Layer	2nd Layer
	Self-Tapping Drywall Screws	
E2DFsA60-FM29	16mm	13mm
	32 x 6g	41 x 6g
E2DFsA60-F32	16mm	16mm
	32 x 6g	51 x 7g

Fastening Centres
Ceiling sheets shall be fixed at 200mm centres along each metal ceiling batten.

Fix butt ends at 100mm centres.

Fasteners to be placed no closer than 12mm from sheet edge.

Avoid outer layer screws from hitting inner layer screws.

Acoustic Sealant
A bead of fire retardant Acoustic Sealant must be applied around the perimeter of the first layer and the second layer bedded on the bead.

Wall/Ceiling Junction
The internal angle between the ceilings and walls must be protected by Cornice or square stopped corners taped and filled in accordance with EPB® Plasterboard Installation Guide.

Jointing
Inner layer: Unstopped.

Outer Layer: All fastener heads stopped and all sheet joints reinforced with paper jointing tape and stopped in accordance with the publication entitled EPB® Plasterboard Installation Guide.

***Impact Insulation Class (IIC)**
IIC of 47 is achieved with a bare floor.

IIC of 49 is achieved with loose laid Vinyl.

IIC of 73 is achieved with 40oz loop pile carpet on 8mm foam chip underlay.

IIC of 75 is achieved with 40oz loop pile carpet on waffle underlay.

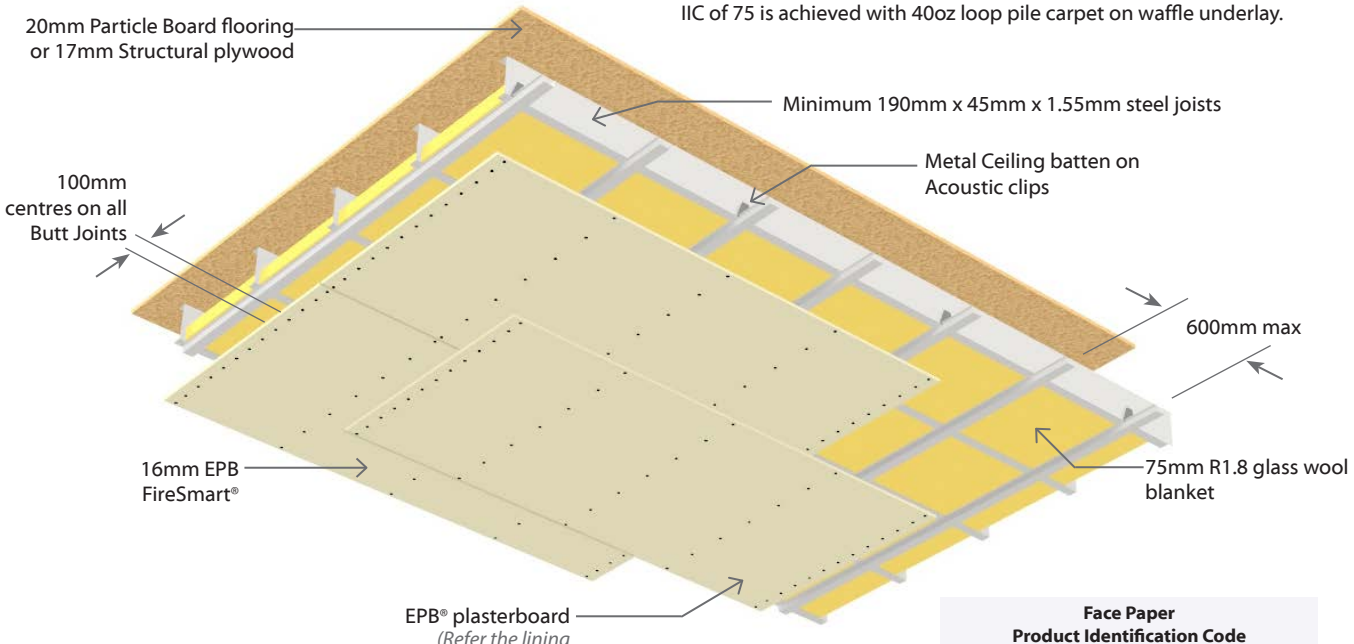

Face Paper Product Identification Code	
13mm EPB BraceSmart®/NoiseSmart®	**M13**
16mm EPB FireSmart®	**F16**

Sub Intertenancy Timber Frame Walls

E2TLa30 Single Timber Frame Load Bearing Two Way FRR

2 Layers: 1 Layer of Plasterboard to each side of frame | Sub Intertenancy **a**coustic

System Number	Lining Suffix	FRR	Load Bearing Ability	Noise Control		Lining Requirement
				STC	Rw	
E2TLa30	**-S20**	30/30/30	LB	39	38	1 x 10mm EPB® Standard each side
	-S26	30/30/30	LB	40	39	1 x 13mm EPB® Standard each side
	-M20	30/30/30	LB	41	40	1 x 10mm EPB BraceSmart®/NoiseSmart® each side

Framing

Framing to comply with relevant sections and clauses of NZBC B1: Structure and NZBC B2: Durability.

Studs at 600mm centres maximum.

Nogs at 1350mm centre maximum.

Wall Height, Load and Framing Dimension

These are determined by NZS3604 stud tables for load bearing or non-load bearing partitions. Minimum frame dimension 90 x 45mm in order to achieve the stated STC ratings above.

Wall Sound Absorber

Install Sound Absorber between studs and nogs of the frame. Use 90mm thick R2.2 glass wool insulation.

Plasterboard Lining

NB: The installer must look for the Product Identification Code on the face paper to ensure the correct board type is installed. Refer to the Face Paper Product Identification Code table on this page.

One layer of EPB® Plasterboard lining as per specified system above on each side of the timber framing.

Vertical or Horizontal fixing permitted.

Use full height sheets where possible when fixing vertical.

Inner layer joints on opposite side of frame should be offset.

All sheet joints must be fixed over solid timber framing.

Sheet end butt joints must be formed over nogs.

Sheets shall be touch fitted.

Fixing of Linings (Non Fire Rated)

Fix the linings as per the EPB® Plasterboard Installation Guide. If an FRR is required then follow the Fixing of Linings instruction in the following paragraph.

Fixing of Linings (to achieve Fire Rating)

Fasteners (As per Specified System Above)

System Number	Single Layer
	High Thread Drywall Screws
E2TLa30-S20 E2TLa30-M20	10mm
	41 x 6g
E2TLa30-S26	13mm
	41 x 6g

Fastener Centres

Fix at 300mm centres at sheet perimeter and up all other studs.

Place fasteners 50mm from sheet corners along the top and bottom plates. On end studs place additional fasteners 50-60mm vertically and no close than 10mm from plate to stud connections.

Place fasteners minimum 12mm from sheet edges and sheet ends.

Place fasteners at 200mm centres where sheet end butt joints occur.

Acoustic Sealant

A bead of acoustic sealant is required around the perimeter of the framing and the single layer is bedded onto the bead. The perimeter junctions of the wall must be airtight.

Jointing

All fastener heads stopped and all sheet joints reinforced with paper jointing tape and stopped. Wall to ceiling junctions are to be reinforced with paper tape and square stopped or finished with Cornice. All in accordance with EPB® Plasterboard Installation Guide.

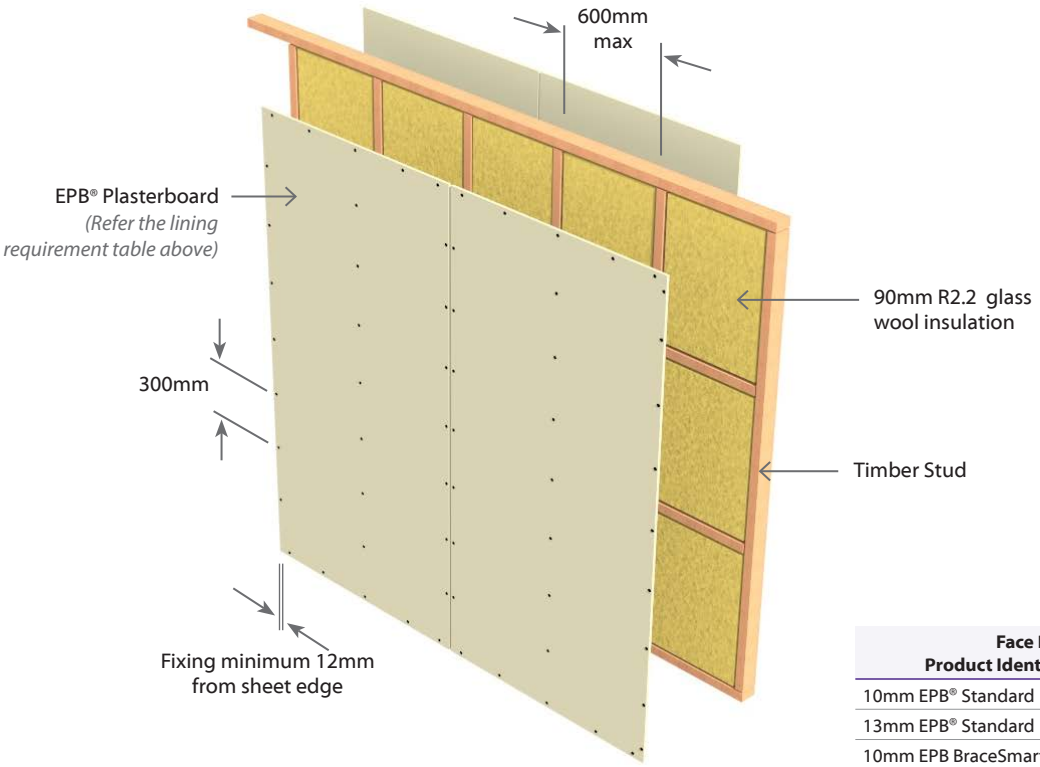

Face Paper Product Identification Code	
10mm EPB® Standard	**S10**
13mm EPB® Standard	**S13**
10mm EPB BraceSmart®/NoiseSmart®	**M10**

E3TLa30 | Single **T**imber Frame | **L**oad Bearing | Two Way FRR

3 Layers: 1 Layer of Plasterboard to one side of frame & 2 Layers of Plasterboard to other side of frame | Sub Intertenancy **a**coustic

System Number	Lining Suffix	FRR	Load Bearing Ability	Noise Control		Lining Requirement
				STC	Rw	
E3TLa30	**-S30**	30/30/30	LB	42	41	1 x 10mm EPB® Standard one side 2 x 10mm EPB® Standard other side
	-S39	30/30/30	LB	43	42	1 x 13mm EPB® Standard one side 2 x 13mm EPB® Standard other side
	-M30	30/30/30	LB	44	43	1 x 10mm EPB BraceSmart®/NoiseSmart® one side 2 x 10mm EPB BraceSmart®/NoiseSmart® other side

Framing

Framing to comply with relevant sections and clauses of NZBC B1: Structure and NZBC B2: Durability.

Studs at 600mm centres maximum.

Nogs at 1350mm centre maximum.

Wall Height, Load and Framing Dimension

These are determined by NZS3604 stud tables for load bearing or non-load bearing partitions. Minimum frame dimension 90 x 45mm in order to achieve the stated STC ratings above.

Wall Sound Absorber

Install Sound Absorber between studs and nogs of the frame.
Use 90mm thick R2.2 glass wool insulation.

Plasterboard Lining

NB: The installer must look for the Product Identification Code on the face paper to ensure the correct board type is installed. Refer to the Face Paper Product Identification Code table on this page.

One layer of EPB® Plasterboard lining on one side of frame and Two layers on the other side of framing as per specified system above.

First layer or inner layer on each side of framing to be fixed vertically.

Vertical or Horizontal fixing permitted on outer layer only.

Use full height sheets where possible when fixing vertical.

Inner layer joints on opposite side of frame should be offset.

All sheet joints must be fixed over solid timber framing.

Sheet end butt joints must be formed over nogs and offset the outer layer joints from the inner layer.

Sheets shall be touch fitted.

Fixing of Linings (Non Fire Rated)

Fix the linings as per the EPB® Plasterboard Installation Guide. If an FRR is required then follow the Fixing of Linings instruction in the following paragraph.

Fixing of Linings (to achieve Fire Rating)

Fasteners (As per Specified System Above)

System Number	Side One		Side Two
	1st Layer	2nd Layer	Single Layer
	High Thread Drywall Screws		
E3TLa30-S30 **E3TLa30-M30**	10mm	10mm	10mm
	41 x 6g	51 x 7g	41 x 6g
E3TLa30-S39	10mm	10mm	13mm
	41 x 6g	51 x 7g	41 x 6g

Fastener Centres

Inner Layer: Fix at 600 centres on vertical studs and 600mm centres horizontally on top and bottom plates.
Single or Outer Layer: Fix at 300mm centres at sheet perimeter and 300mm centres up each stud.
Place fasteners 50mm from sheet corners along the top and bottom plates. On end studs place additional fasteners 50-60mm vertically and no close than 10mm from plate to stud connections.
Place fasteners minimum 12mm from sheet edges and sheet ends.
Place fasteners at 200mm centres where sheet end butt joints occur.
Avoid outer layer screws from hitting inner layer screws.

Acoustic Sealant

A bead of acoustic sealant is required around the perimeter of the framing or the inner layer. Then the single or outer layer is bedded onto the bead. The perimeter junctions of the wall must be airtight.

Jointing

Inner Layer: Unstopped.
Outer or Single Layer: All fastener heads stopped and all sheet joints reinforced with paper jointing tape and stopped. Wall to ceiling junctions are to be reinforced with paper tape and square stopped or finished with Cornice. All in accordance with EPB® Plasterboard Installation Guide.

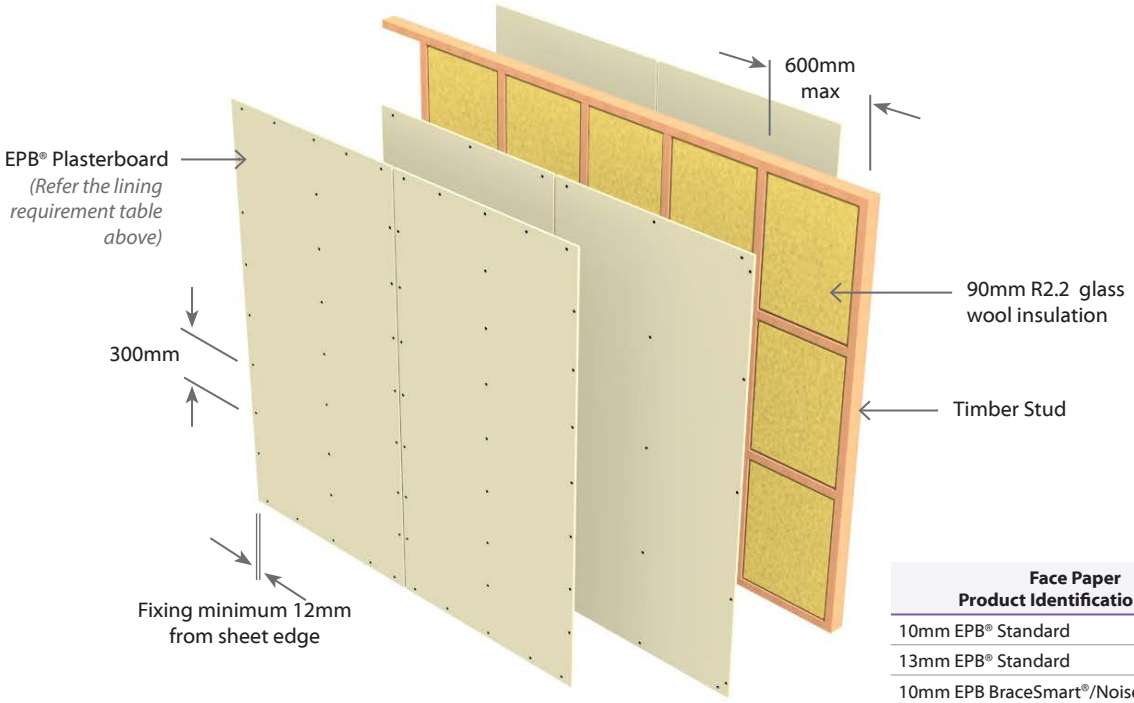

Face Paper Product Identification Code	
10mm EPB® Standard	**S10**
13mm EPB® Standard	**S13**
10mm EPB BraceSmart®/NoiseSmart®	**M10**

E4TLa45 Single Timber Frame | Load Bearing | Two Way FRR

4 Layers: 2 Layers of Plasterboard to each side of frame | Sub Intertenancy **a**coustic

System Number	Lining Suffix	FRR	Load Bearing Ability	Noise Control		Lining Requirement
				STC	Rw	
E4TLa45	**-S40**	45/45/45	LB	44	43	2 x 10mm EPB® Standard each side

Framing
Framing to comply with relevant sections and clauses of NZBC B1: Structure and NZBC B2: Durability.

Studs at 600mm centres maximum.

Nogs at 1350mm centre maximum.

Wall Height, Load and Framing Dimension
These are determined by NZS3604 stud tables for load bearing or non-load bearing partitions. Minimum frame dimension 90 x 45mm in order to achieve the stated STC ratings above.

Wall Sound Absorber
Install Sound Absorber between studs and nogs of the frame.
Use 90mm thick R2.2 glass wool insulation.

Plasterboard Lining
NB: The installer must look for the Product Identification Code on the face paper to ensure the correct board type is installed. Refer to the Face Paper Product Identification Code table on this page.

Two layers of 10mm EPB® Standard lining on each side of timber framing.

First layer or inner layer on each side of framing to be fixed vertically.

Vertical or Horizontal fixing permitted on outer layer only. Use full height sheets where possible. Inner layer joints on opposite side of frame should be offset. All sheet joints must be fixed over solid timber framing.

Vertical Joints of the outer layer should be offset 600mm from those of the inner layer. Sheet end butt joints must be formed over nogs and offset the outer layer joints from the inner layer.

Sheets shall be touch fitted.

Fixing of Linings (Non Fire Rated)
Fix the linings as per the EPB® Installation Guide. If an FRR is required then follow the Fixing of Linings instruction in the following paragraph.

Fixing of Linings (to achieve Fire Rating)
Fasteners

System Number	Side One		Side Two	
	1st Layer	2nd Layer	1st Layer	2nd Layer
	High Thread Drywall Screws			
E4TLa45-S40	10mm	10mm	10mm	10mm
	41 x 6g	51 x 7g	41 x 6g	51 x 7g

Fastener Centres

Inner Layer: Fix at 600 centres on vertical studs and 600mm centres horizontally on top and bottom plates.

Outer Layer: Fix at 300mm centres at sheet perimeter and 300mm centres up each stud.

Place fasteners 50mm from sheet corners along the top and bottom plates. On end studs place additional fasteners 50-60mm vertically and no close than 10mm from plate to stud connections.

Place fasteners minimum 12mm from sheet edges and sheet ends.

Place fasteners at 200mm centres where sheet end butt joints occur.

Avoid outer layer screws from hitting inner layer screws.

Acoustic Sealant
A bead of acoustical sealant is required around the perimeter of the inner layer and the outer layer is bedded onto the bead. The perimeter junctions of the wall must be airtight.

Jointing
Inner Layer: Unstopped.

Outer Layer: All fastener heads stopped and all sheet joints reinforced with paper jointing tape and stopped. Wall to ceiling junctions are to be reinforced with paper tape and square stopped or finished with Cornice. All in accordance with EPB® Plasterboard Installation Guide.

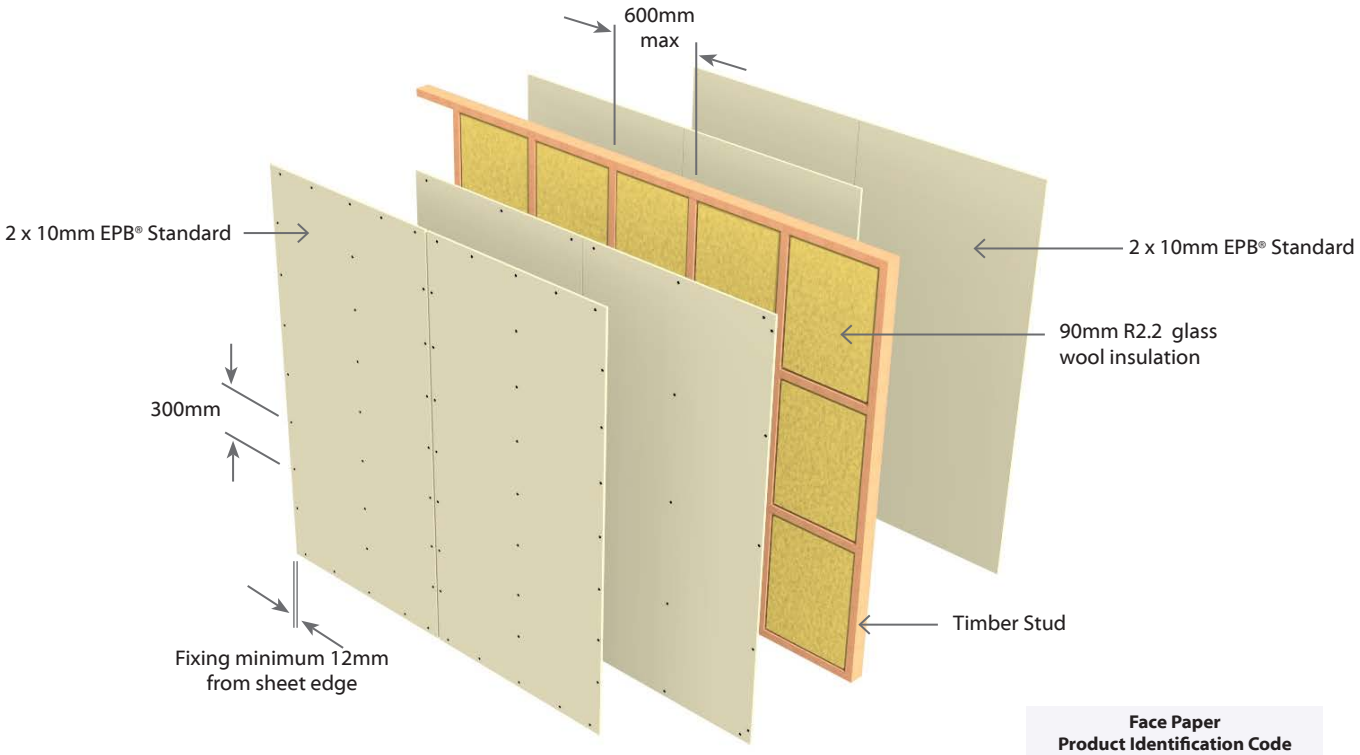

Face Paper Product Identification Code	
10mm EPB® Standard	**S10**

E2TLa60 Single Timber Frame | Load Bearing | Two Way FRR

2 Layers: 1 Layer of Plasterboard to each side of frame | Sub Intertenancy **a**coustic

System Number	Lining Suffix	FRR	Load Bearing Ability	Noise Control		Lining Requirement
				STC	Rw	
E2TLa60	**-M26**	60/60/60	LB	42	41	1 x 13mm EPB BraceSmart®/NoiseSmart® each side

Framing
Framing to comply with relevant sections and clauses of NZBC B1: Structure and NZBC B2: Durability.

Studs at 600mm centres maximum.

Nogs at 800mm centre maximum.

Wall Height, Load and Framing Dimension
These are determined by NZS3604 stud tables for load bearing or non-load bearing partitions. Minimum frame dimension 90 x 45mm in order to achieve the stated STC ratings above.

Wall Sound Absorber
Install Sound Absorber between studs and nogs of the frame.
Use 90mm thick R2.2 glass wool insulation.

Plasterboard Lining
NB: The installer must look for the Product Identification Code on the face paper to ensure the correct board type is installed. Refer to the Face Paper Product Identification Code table on this page.

One layer of 13mm EPB BraceSmart®/NoiseSmart® lining on each side of the timber framing.

Vertical fixing only permitted. Use full height sheets where possible when fixing vertical. Sheet joints on opposite side of frame should be offset. All sheet joints must be fixed over solid timber framing. Sheet end butt joints must be formed over nogs. Sheets shall be touch fitted.

Fixing of Linings (Non Fire Rated)
Fix the linings as per the EPB Installation Guide. If an FRR is required then follow the Fixing of Linings instruction in the following paragraph.

Fixing of Linings (to achieve Fire Rating)
Fasteners

System Number	Single Layer	
	High Thread Drywall Screws	
E2TLa60-M26	13mm	13mm
	41 x 6g	41 x 6g

Fastener Centres

Fix at 300mm centres at sheet perimeter and up all other studs.

Place fasteners 50mm from sheet corners along the top and bottom plates. On end studs place additional fasteners 50-60mm vertically and no close than 10mm from plate to stud connections.

Place fasteners minimum 12mm from sheet edges and sheet ends.

Place fasteners at 200mm centres where sheet end butt joints occur.

Acoustic Sealant
A bead of acoustic sealant is required around the perimeter of the framing and the single layer is bedded onto the bead. The perimeter junctions of the wall must be airtight.

Jointing
All fastener heads stopped and all sheet joints reinforced with paper jointing tape and stopped. Wall to ceiling junctions are to be reinforced with paper tape and square stopped or finished with Cornice. All in accordance with EPB® Plasterboard Installation Guide.

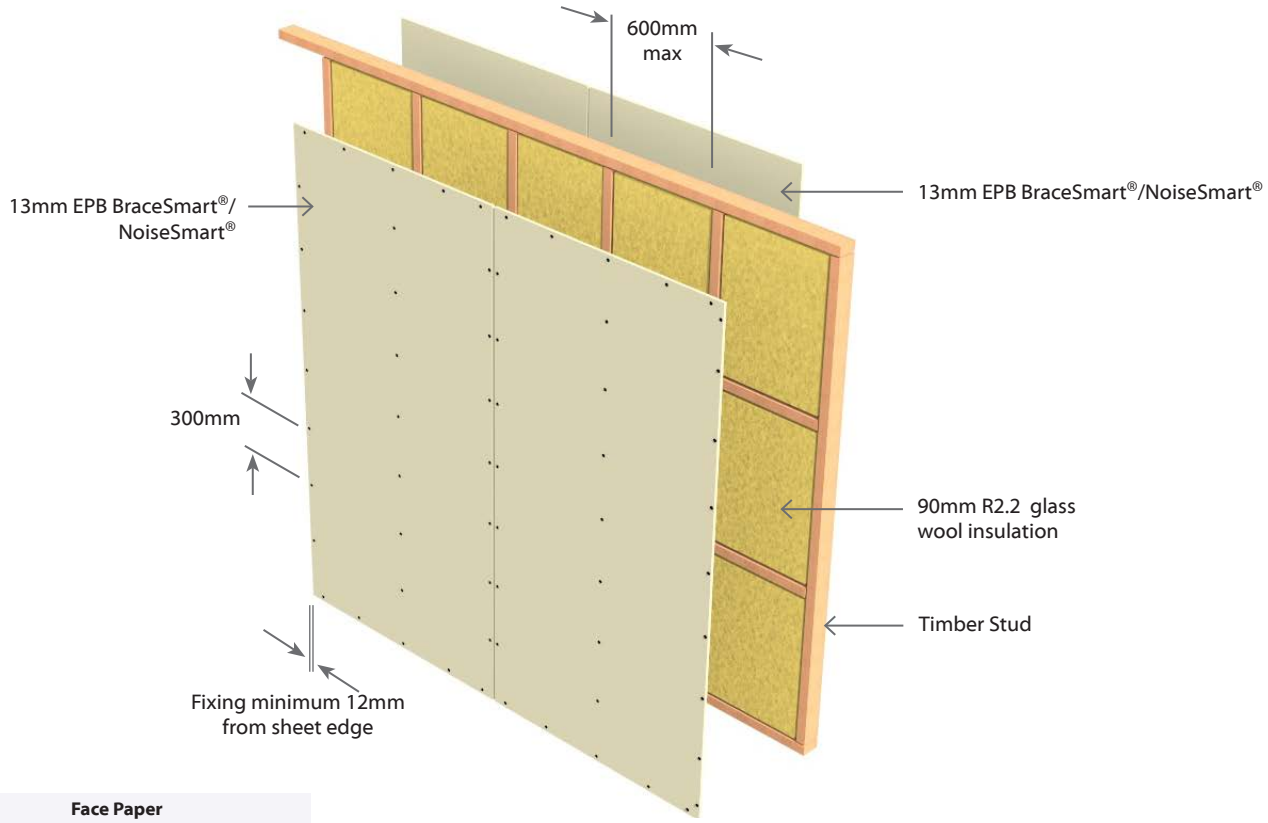

Face Paper Product Identification Code	
13mm EPB BraceSmart®/NoiseSmart®	**M13**

E3TLa60 Single **T**imber Frame | **L**oad Bearing | Two Way FRR

3 Layers: 1 Layer of Plasterboard to one side of frame & 2 Layers of Plasterboard to other side of frame | Sub Intertenancy **a**coustic

System Number	Lining Suffix	FRR	Load Bearing Ability	Noise Control		Lining Requirement
				STC	Rw	
E3TLa60	**-MS39**	60/60/60	LB	45	44	1 x 13mm EPB BraceSmart®/NoiseSmart® one side 2 x 13mm EPB® Standard other side
	-M33	60/60/60	LB	45	44	1 x 13mm EPB BraceSmart®/NoiseSmart® one side 2 x 10mm EPB BraceSmart®/NoiseSmart® other side
	-M39	60/60/60	LB	46	45	1 x 13mm EPB BraceSmart®/NoiseSmart® one side 2 x 13mm EPB BraceSmart®/NoiseSmart® other side

Framing

Framing to comply with relevant sections and clauses of NZBC B1: Structure and NZBC B2: Durability.

Studs at 600mm centres maximum.

Nogs at 1350mm centre maximum.

Wall Height, Load and Framing Dimension

These are determined by NZS3604 stud tables for load bearing or non-load bearing partitions. Minimum frame dimension 90 x 45mm in order to achieve the stated STC ratings above.

Wall Sound Absorber

Install Sound Absorber between studs and nogs of the frame.
Use 90mm thick R2.2 glass wool insulation.

Plasterboard Lining

NB: The installer must look for the Product Identification Code on the face paper to ensure the correct board type is installed. Refer to the Face Paper Product Identification Code table on this page.

One layer of EPB® Plasterboard lining on one side of frame and Two layers on the other side of framing as per specified system above.

First layer or inner layer on each side of framing to be fixed vertically. Vertical or Horizontal fixing permitted on outer layer only. Use full height sheets where possible when fixing vertical.

Inner layer joints on opposite side of frame should be offset. All sheet joints must be fixed over solid timber framing.

Sheet end butt joints must be formed over nogs and offset the outer layer joints from the inner layer. Sheets shall be touch fitted.

Fixing of Linings (Non Fire Rated)

Fix the linings as per the EPB® Installation Guide. If an FRR is required then follow the Fixing of Linings instruction in the following paragraph.

Fixing of Linings (to achieve Fire Rating)

Fasteners (As per Specified System Above)

System Number	Side One		Side Two
	1st Layer	2nd Layer	Single Layer
	High Thread Drywall Screws		
E3TLa60-M33	10mm	10mm	13mm
	41 x 6g	51 x 7g	41 x 6g
E3TLa60-M39 **E3TLa60-MS39**	10mm	10mm	13mm
	41 x 6g	51 x 7g	41 x 6g

Fastener Centres

Inner Layer: Fix at 600 centres on vertical studs and 600mm centres horizontally on top and bottom plates.

Outer Layer: Fix at 300mm centres at sheet perimeter and 300mm centres up each stud.

Place fasteners 50mm from sheet corners along the top and bottom plates. On end studs place additional fasteners 50-60mm vertically and no close than 10mm from plate to stud connections.

Place fasteners minimum 12mm from sheet edges and sheet ends.

Place fasteners at 200mm centres where sheet end butt joints occur.

Avoid outer layer screws from hitting inner layer screws.

Acoustic Sealant

A bead of acoustic sealant is required around the perimeter of the framing or the inner layer. Then the single or outer layer is bedded onto the bead. The perimeter junctions of the wall must be airtight.

Jointing

Inner Layer: Unstopped.

Outer or Single Layer: All fastener heads stopped and all sheet joints reinforced with paper jointing tape and stopped. Wall to ceiling junctions are to be reinforced with paper tape and square stopped or finished with Cornice. All in accordance with EPB® Plasterboard Installation Guide.

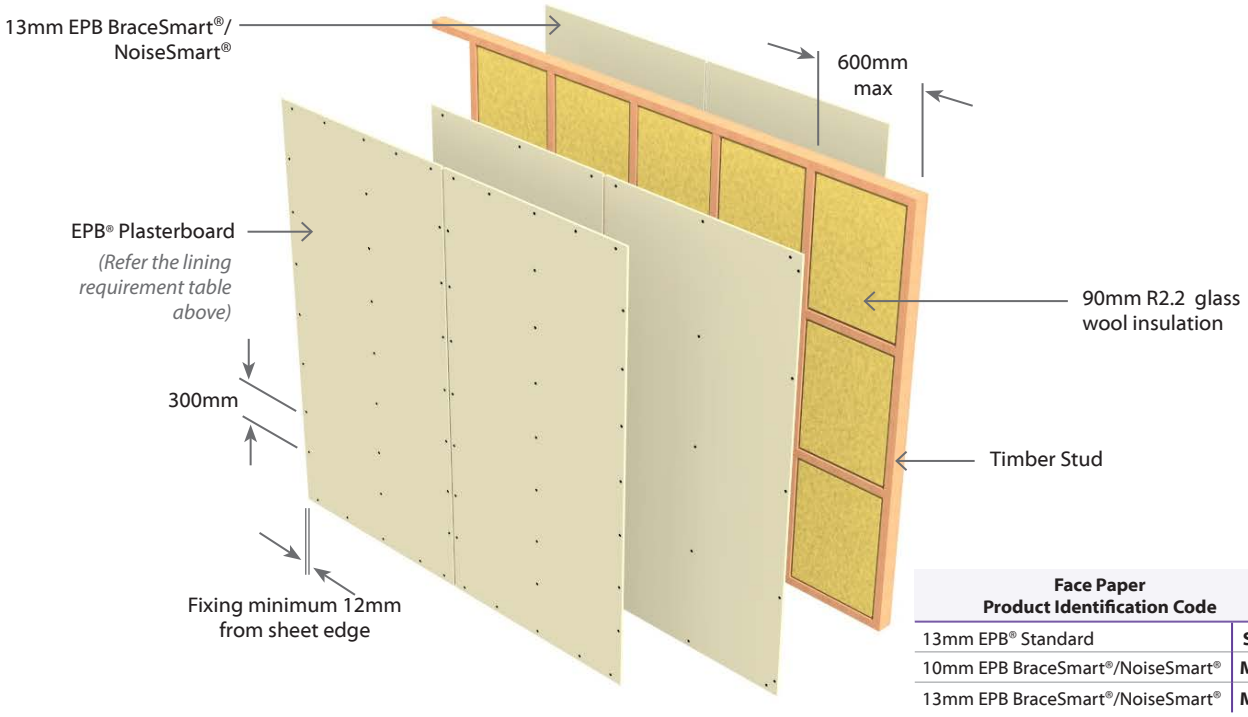

Face Paper Product Identification Code	
13mm EPB® Standard	**S13**
10mm EPB BraceSmart®/NoiseSmart®	**M10**
13mm EPB BraceSmart®/NoiseSmart®	**M13**

E4TLa60 Single Timber Frame Load Bearing Two Way FRR

4 Layers: 2 Layers of Plasterboard to each side of frame | Sub Intertenancy **a**coustic

System Number	Lining Suffix	FRR	Load Bearing Ability	Noise Control		Lining Requirement
				STC	Rw	
E4TLa60	-S46	60/60/60	LB	45	44	1 x 10mm EPB® Standard & 1 x 13mm EPB® Standard each side
	-S52	60/60/60	LB	46	45	2 x 13mm EPB® Standard each side
	-M40	60/60/60	LB	46	45	2 x 10mm EPB BraceSmart®/NoiseSmart® each side

Framing

Framing to comply with relevant sections and clauses of NZBC B1: Structure and NZBC B2: Durability.

Studs at 600mm centres maximum.

Nogs at 1350mm centre maximum.

Wall Height, Load and Framing Dimension

These are determined by NZS3604 stud tables for load bearing or non-load bearing partitions. Minimum frame dimension 90 x 45mm in order to achieve the stated STC ratings above.

Wall Sound Absorber

Install Sound Absorber between studs and nogs of the frame.
Use 90mm thick R2.2 glass wool insulation.

Plasterboard Lining

NB: The installer must look for the Product Identification Code on the face paper to ensure the correct board type is installed. Refer to the Face Paper Product Identification Code table on this page.

Two layers of EPB® Plasterboard lining on one side of frame and Two layers on the other side of framing as per specified system above.

First layer or inner layer on each side of framing to be fixed vertically.

Vertical or Horizontal fixing permitted on outer layer only. Use full height sheets where possible. Inner layer joints on opposite side of frame should be offset. All sheet joints must be fixed over solid timber framing. Vertical Joints of the outer layer should be offset 600mm from those of the inner layer. Sheet end butt joints must be formed over nogs and offset the outer layer joints from the inner layer. Sheets shall be touch fitted.

Fixing of Linings (Non Fire Rated)

Fix the linings as per the EPB® Installation Guide. If an FRR is required then follow the Fixing of Linings instruction in the following paragraph.

Fixing of Linings (to achieve Fire Rating)

Fasteners (As per Specified System Above)

System Number	Side One		Side Two	
	1st Layer	2nd Layer	1st Layer	2nd Layer
	High Thread Drywall Screws			
E4TLa60-S46	10mm	13mm	10mm	13mm
	41 x 6g	51 x 7g	41 x 6g	51 x 7g
E4TLa60-S52	13mm	13mm	13mm	13mm
	41 x 6g	51 x 7g	41 x 6g	51 x 7g
E4TLa60-M40	10mm	10mm	10mm	10mm
	41 x 6g	51 x 7g	41 x 6g	51 x 7g

Fastener Centres

Inner Layer: Fix at 600 centres on vertical studs and 600mm centres horizontally on top and bottom plates.

Outer Layer: Fix at 300mm centres at sheet perimeter and 300mm centres up each stud.

Place fasteners 50mm from sheet corners along the top and bottom plates. On end studs place additional fasteners 50-60mm vertically and no close than 10mm from plate to stud connections.

Place fasteners minimum 12mm from sheet edges and sheet ends.

Place fasteners at 200mm centres where sheet end butt joints occur.

Avoid outer layer screws from hitting inner layer screws.

Acoustic Sealant

A bead of acoustical sealant is required around the perimeter of the inner layer and the outer layer is bedded onto the bead. The perimeter junctions of the wall must be airtight.

Jointing

Inner Layer: Unstopped.

Outer Layer: All fastener heads stopped and all sheet joints reinforced with paper jointing tape and stopped. Wall to ceiling junctions are to be reinforced with paper tape and square stopped or finished with Cornice. All in accordance with EPB® Plasterboard Installation Guide.

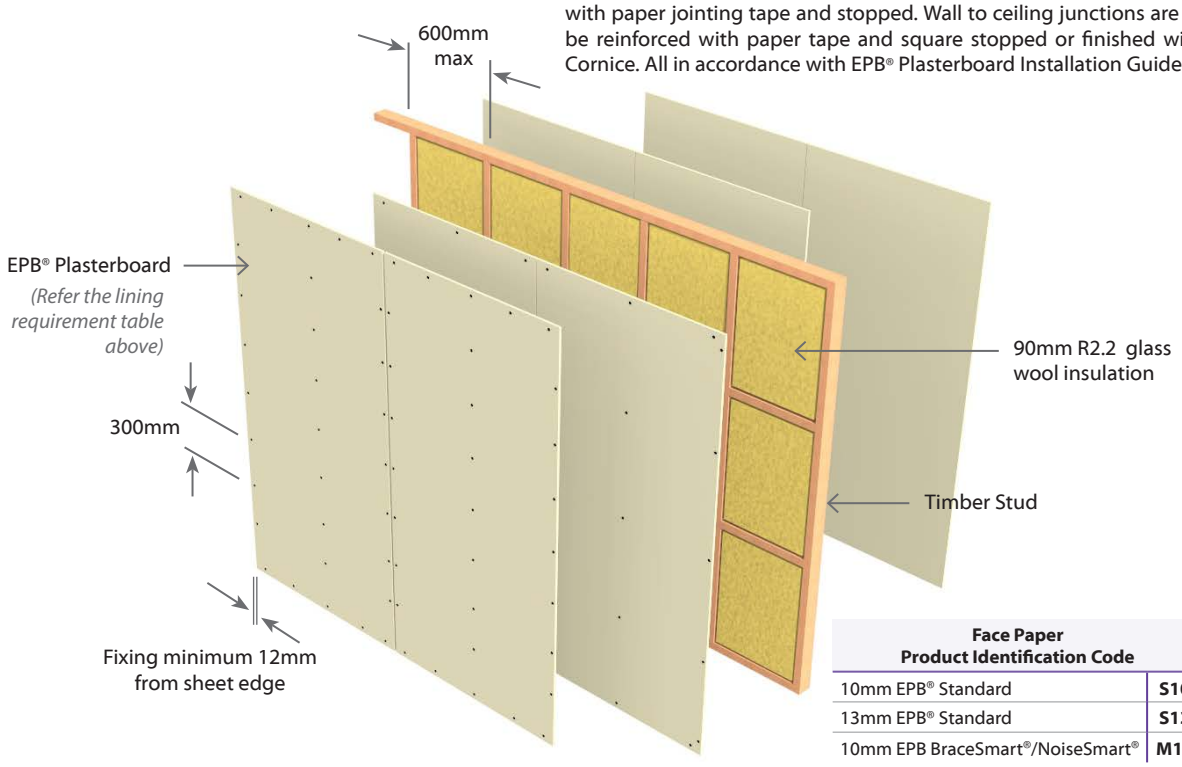

Face Paper Product Identification Code	
10mm EPB® Standard	**S10**
13mm EPB® Standard	**S13**
10mm EPB BraceSmart®/NoiseSmart®	**M10**

E4TLa90 Single **T**imber Frame | **L**oad Bearing | Two Way FRR

4 Layers: 2 Layers of Plasterboard to each side of frame | Sub Intertenancy **a**coustic

System Number	Lining Suffix	FRR	Load Bearing Ability	Noise Control		Lining Requirement
				STC	Rw	
E4TLa90	**-M52**	90/90/90	LB	48	47	2 x 13mm EPB BraceSmart®/NoiseSmart® one side 2 x 13mm EPB BraceSmart®/NoiseSmart® other side

Framing
Framing to comply with relevant sections and clauses of NZBC B1: Structure and NZBC B2: Durability.

Studs at 600mm centres maximum.

Nogs at 1350mm centre maximum.

Wall Height, Load and Framing Dimension
These are determined by NZS3604 stud tables for load bearing or non-load bearing partitions. Minimum frame dimension 90 x 45mm in order to achieve the stated STC ratings above.

Wall Sound Absorber
Install Sound Absorber between studs and nogs of the frame.
Use 90mm thick R2.2 glass wool insulation.

Plasterboard Lining
NB: The installer must look for the Product Identification Code on the face paper to ensure the correct board type is installed. Refer to the Face Paper Product Identification Code table on this page.

Two layers of 13mm EPB BraceSmart®/NoiseSmart® lining on each side of timber framing.

Vertical fixing only permitted. Use full height sheets where possible.

Inner layer joints on opposite side of frame should be offset.

All sheet joints must be fixed over solid timber framing.

Vertical Joints of the outer layer should be offset 600mm from those of the inner layer. Sheet end butt joints must be formed over nogs and offset the outer layer joints from the inner layer.

Sheets shall be touch fitted.

Fixing of Linings (Non Fire Rated)
Fix the linings as per the EPB® Installation Guide. If an FRR is required then follow the Fixing of Linings instruction in the following paragraph.

Fixing of Linings (to achieve Fire Rating)
Fasteners

System Number	Side One		Side Two	
	1st Layer	2nd Layer	1st Layer	2nd Layer
	High Thread Drywall Screws			
E4TLa90-M52	13mm	13mm	13mm	13mm
	41 x 6g	51 x 7g	41 x 6g	51 x 7g

Fastener Centres

Inner Layer: Fix at 600 centres on vertical studs and 600mm centres horizontally on top and bottom plates.

Outer Layer: Fix at 300mm centres at sheet perimeter and 300mm centres up each stud.

Place fasteners 50mm from sheet corners along the top and bottom plates. On end studs place additional fasteners 50-60mm vertically and no close than 10mm from plate to stud connections.
Place fasteners minimum 12mm from sheet edges and sheet ends.

Place fasteners at 200mm centres where sheet end butt joints occur.

Avoid outer layer screws from hitting inner layer screws.

Acoustic Sealant
A bead of acoustical sealant is required around the perimeter of the inner layer and the outer layer is bedded onto the bead. The perimeter junctions of the wall must be airtight.

Jointing
Inner Layer: Unstopped.

Outer Layer: All fastener heads stopped and all sheet joints reinforced with paper jointing tape and stopped. Wall to ceiling junctions are to be reinforced with paper tape and square stopped or finished with Cornice. All in accordance with EPB® Plasterboard Installation Guide.

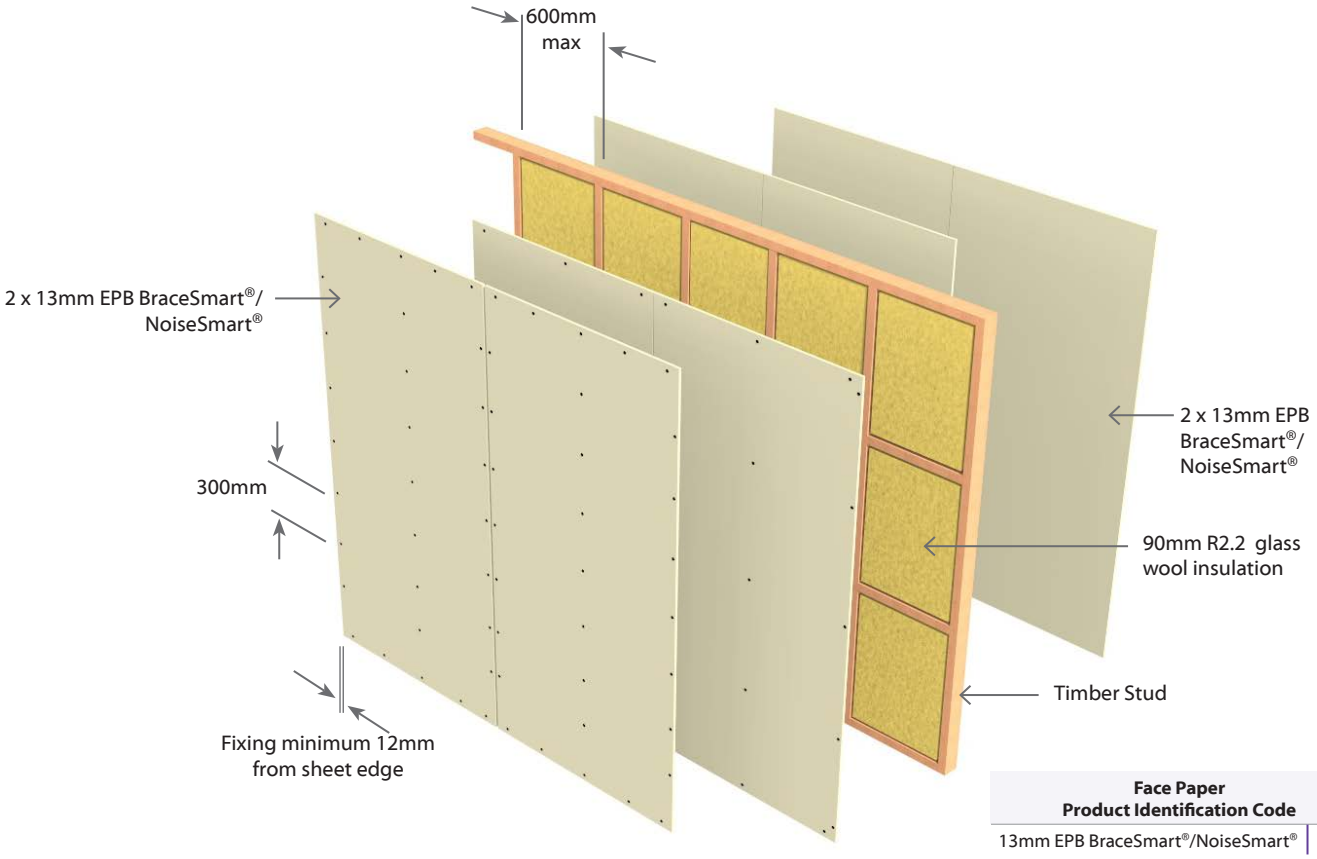

Face Paper Product Identification Code	
13mm EPB BraceSmart®/NoiseSmart®	**M13**

E2TDLa30 Double Timber Frame | Load Bearing | Two Way FRR

2 Layers: 1 Layer of Plasterboard to each side of frame | Sub Intertenancy **a**coustic

System Number	Lining Suffix	FRR	Load Bearing Ability	Noise Control		Lining Requirement
				STC	Rw	
E2TDLa30	**-S20**	30/30/30	LB	50	49	1 x 10mm EPB® Standard one side 1 x 10mm EPB® Standard other side
	-S26	30/30/30	LB	52	51	1 x 13mm EPB® Standard one side 1 x 13mm EPB® Standard other side
	-M20	30/30/30	LB	52	51	1 x 10mm EPB BraceSmart®/NoiseSmart® one side 1 x 10mm EPB BraceSmart®/NoiseSmart® other side

Framing

Framing to comply with relevant sections and clauses of NZBC B1: Structure and NZBC B2: Durability.

Studs at 600mm centres maximum.

Nogs at 800mm centre maximum.

Wall Height, Load and Framing Dimension

These are determined by NZS3604 stud tables for load bearing or non-load bearing partitions. Minimum frame dimension 90 x 45mm in order to achieve the stated STC ratings above. Space between Frames shall be a minimum of 25mm

Minimum Partition Width

In order to achieve the STC ratings in the table above the partition width (excluding the board) shall be a minimum of 205mm. Increasing the partition width would increase STC performance as per the table below.

Stud Size	Space Between Frames	Partition Width (Excludes Board)	STC Rating
90 x 45mm	25mm Min	205mm	+0
90 x 45mm	75mm Min	255mm	+2

Wall Sound Absorber

Install Sound Absorber between studs and nogs on one side of the double frame. Use 90mm thick R2.2 glass wool insulation.

Plasterboard Lining

NB: The installer must look for the Product Identification Code on the face paper to ensure the correct board type is installed. Refer to the Face Paper Product Identification Code table on this page.

One layer of EPB® Plasterboard lining as per specified system above on each side of the timber framing.

Vertical or Horizontal fixing permitted. Use full height sheets where possible when fixing vertical. Sheet joints on opposite side of frame should be offset. All sheet joints must be fixed over solid timber framing. Sheet end butt joints must be formed over nogs. Sheets shall be touch fitted.

Fixing of Linings (Non Fire Rated)

Fix the linings as per the EPB® Plasterboard Installation Guide. If an FRR is required then follow the Fixing of Linings instruction in the following paragraph.

Fixing of Linings (to achieve Fire Rating)

Fasteners (As per Specified System Above)

System Number	Single Layer
	High Thread Drywall Screws
E2TDLa30-S20 **E2TDLa30-M20**	10mm 41 x 6g
E2TDLa30-S26	13mm 41 x 6g

Fastener Centres

Fix at 300mm centres at sheet perimeter and up all other studs.

Place fasteners 50mm from sheet corners along the top and bottom plates. On end studs place additional fasteners 50-60mm vertically and no close than 10mm from plate to stud connections.

Place fasteners minimum 12mm from sheet edges and sheet ends.

Place fasteners at 200mm centres where sheet end butt joints occur.

Acoustic Sealant

A bead of acoustic sealant is required around the perimeter of the framing and the single layer is bedded onto the bead. The perimeter junctions of the wall must be airtight.

Jointing

All fastener heads stopped and all sheet joints reinforced with paper jointing tape and stopped. Wall to ceiling junctions are to be reinforced with paper tape and square stopped or finished with Cornice. All in accordance with EPB® Plasterboard Installation Guide.

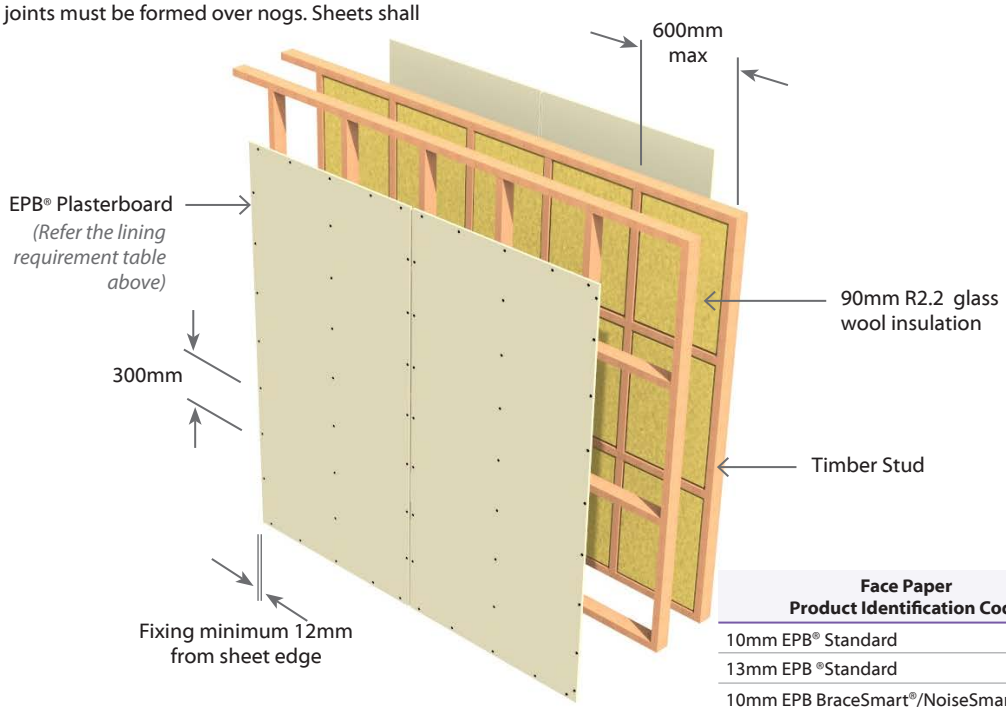

Face Paper Product Identification Code	
10mm EPB® Standard	**S10**
13mm EPB ®Standard	**S13**
10mm EPB BraceSmart®/NoiseSmart®	**M10**

E3TMLa30 Single **T**imber Frame with Resilient **M**ount | **L**oad Bearing | Two Way FRR

3 Layers: 1 Layer of Plasterboard to Framing side & 2 Layers of Plasterboard to Mount side | Sub Intertenancy **a**coustic

System Number	Lining Suffix	FRR	Load Bearing Ability	Noise Control		Lining Requirement
				STC	Rw	
E3TMLa30	**-S30**	30/30/30	LB	52	51	Framing Side: 1 x 10mm EPB® Standard Mount Side: 2 x 10mm EPB® Standard

Framing

Framing to comply with relevant sections and clauses of NZBC B1: Structure and NZBC B2: Durability.

Studs at 600mm centres maximum.

Nogs at 1350mm centre maximum.

Wall Height, Load and Framing Dimension

These are determined by NZS3604 stud tables for load bearing or non-load bearing partitions. Minimum 90 x 45mm frame dimension.

Minimum Partition Width

In order to achieve the STC ratings in the table above the partition width (excluding the board) shall be a minimum of 130mm.

Stud Depth	Mount + Channel	Lining Suffix	Plasterboard	Total Partition
90mm	40mm	**S30**	30mm	160mm

Wall Sound Absorber

Install Sound Absorber between studs and nogs of the frame.
Use 90mm thick R2.2 glass wool insulation.

Acoustic Resilient Mount

The Resilient Mount shall be fixed to the studs at 600mm centres vertically and on every alternative stud using 63mm x 8g self tapping screw. When adjusting the clip for depth, 3mm rubber must remain between the underside of the steel spacer head and the furring channel. The Furring channels are clipped horizontally into the Mounts. Joints must be made as close as possible to the clips.

Plasterboard Lining

NB: The installer must look for the Product Identification Code on the face paper to ensure the correct board type is installed. Refer to the Face Paper Product Identification Code table on this page.

One layer of 10mm EPB Standard lining fixed vertically on framing side and Two layers of 10mm EPB® Standard fixed vertically on the furring channel on the other side.

Vertical fixing only permitted. Vertical joints of outer layer should be offset by 600mm from those of the inner layer. Use full height sheets where possible.

All sheet joints on the framing side must be fixed over solid timber framing. Sheet end butt joints must be formed over nogs or furring channels and offset the outer layer joints from the inner layer. Sheets shall be touch fitted.

Fixing of Linings (Non Fire Rated)

Fix the linings as per the EPB® Plasterboard Installation Guide. If an FRR is required then follow the Fixing of Linings instruction in the following paragraph.

Fixing of Linings (to achieve Fire Rating)

Fasteners

System Number	Furring Channel Side		Framing Side
	1st Layer	2nd Layer	Single Layer
	Self-Tapping Drywall Screws		High Thread Drywall Screws
E3TMLa30-S30	10mm	10mm	10mm
	41 x 6g	25 x 6g	32 x 6g

Fastener Centres

Framing Side: Fix at 300mm centres at sheet perimeter and up each stud.

Resilient Mount Side: Fix 300mm centres along each furring channel.

Place fasteners minimum 12mm from sheet edges and sheet ends.

Place fasteners at 200mm centres where sheet end butt joints occur.

Avoid outer layer screws from hitting inner layer screws.

Acoustic Sealant

A bead of acoustic sealant is required around the perimeter of the framing or the inner layer. The single or outer layer is then bedded onto the bead. The perimeter junctions of the wall must be airtight.

Jointing

Inner Layer: Unstopped.

Outer or Single Layer: All fastener heads stopped and all sheet joints reinforced and stopped. Wall to ceiling junctions are to be reinforced with paper tape and square stopped or finished with Cornice. All in accordance with EPB® Plasterboard Installation Guide.

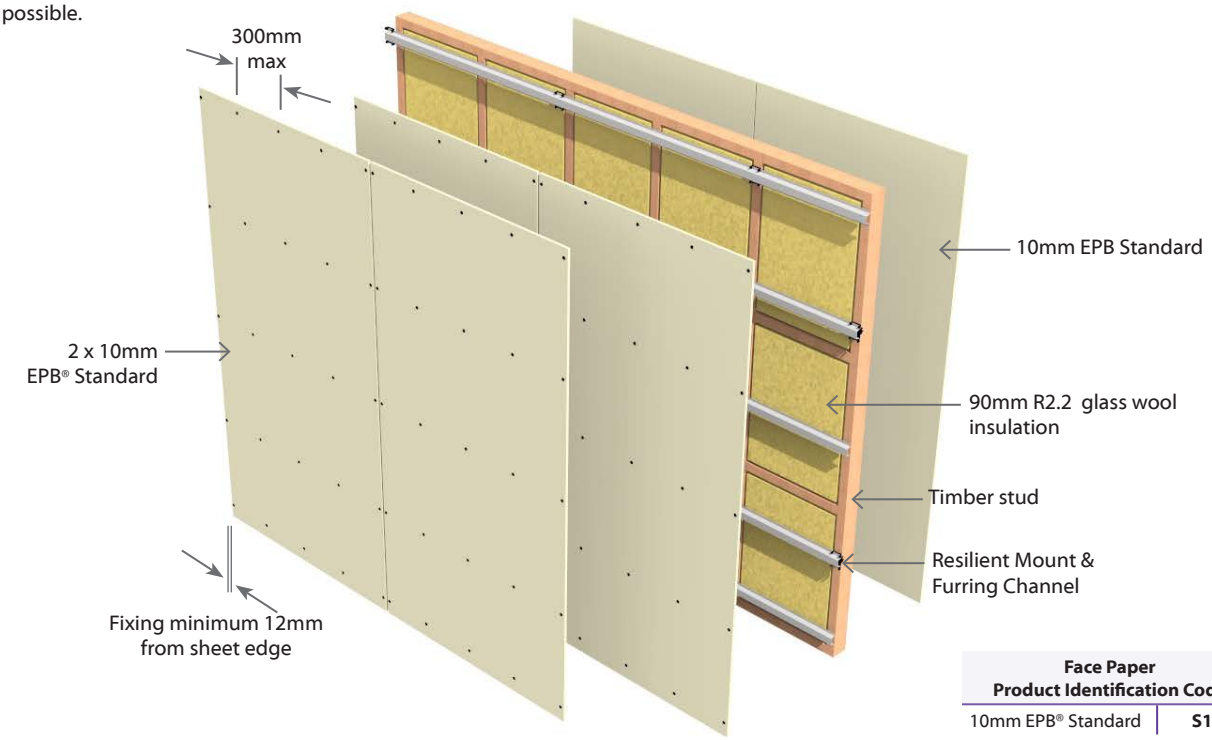

Face Paper Product Identification Code	
10mm EPB® Standard	**S10**

E3TRLa30 Single **T**imber Frame with Resilient **R**ail | **L**oad Bearing | Two Way FRR

3 Layers: 1 Layer of Plasterboard to Framing side & 2 Layers of Plasterboard to Rail side | Sub Intertenancy **a**coustic

System Number	Lining Suffix	FRR	Load Bearing Ability	Noise Control		Lining Requirement
				STC	Rw	
E3TRLa30	**-S30**	30/30/30	LB	47	46	Framing Side: 1 x 10mm EPB® Standard Rail Side: 2 x 10mm EPB® Standard
	-S39	30/30/30	LB	50	49	Framing Side: 1 x 13mm EPB® Standard Rail Side: 2 x 13mm EPB® Standard
	-M30	30/30/30	LB	51	50	Framing Side: 1 x 10mm EPB BraceSmart®/NoiseSmart® Rail Side: 2 x 10mm EPB BraceSmart®/NoiseSmart®

Framing

Framing to comply with relevant sections and clauses of NZBC B1: Structure and NZBC B2: Durability.

Studs at 600mm centres maximum.

Nogs at 1350mm centre maximum.

Wall Height, Load and Framing Dimension

These are determined by NZS3604 stud tables for load bearing or non-load bearing partitions. Minimum 90 x 45mm frame dimension.

Minimum Partition Width

In order to achieve the STC ratings in the table above the partition width (excluding the board) shall be a minimum of 130mm.

Stud Depth	Rail	Lining Suffix		Plasterboard	Total Partition
90mm	13mm	**S30**	**M30**	30mm	133mm
		S39		39mm	142mm

Wall Sound Absorber

Install Sound Absorber between studs and nogs of the frame.
Use 90mm thick R2.2 glass wool insulation.

Acoustic Resilient Rail

The Resilient Rail shall be fixed to the studs at 600mm centres using 32mm x 8g wafer head self-tapping screws through the base flange and into each stud. The base flange to face downwards and resilient edge upwards. Channel may be joined by nesting together with no more than 20mm overlap. Fasten through both channels into stud. Highest resilient channel shall be fixed no more than 75mm from the ceiling line and the lowest channel, 50mm from the floor line.

Plasterboard Lining

NB: The installer must look for the Product Identification Code on the face paper to ensure the correct board type is installed. Refer to the Face Paper Product Identification Code table on this page.

One layer of EPB® Plasterboard lining fixed vertically on framing side and Two layers fixed vertically on the furring channel on the other side as per specified system above. Vertical joints of outer layer should be offset by 600mm from those of the inner layer. Use full height sheets where possible. All sheet joints on the framing side must be fixed over solid timber framing. Sheet end butt joints must be formed over nogs or rails and offset the outer layer joints from the inner layer. Sheets shall be touch fitted.

Face Paper Product Identification Code	
10mm EPB® Standard	**S10**
13mm EPB® Standard	**S13**
10mm EPB BraceSmart®/NoiseSmart®	**M10**

Fixing of Linings (Non Fire Rated)

Fix the linings as per the EPB® Plasterboard Installation Guide. If an FRR is required then follow the Fixing of Linings instruction in the following paragraph.

Fixing of Linings (to achieve Fire Rating)

Fasteners (As per Specified System Above)

System Number	Resilient Rail Side		Framing Side
	1st Layer	2nd Layer	Single Layer
	Self-Tapping Drywall Screws		High Thread Drywall Screws
E3TRLa30-S30 **E3TRLa30-M30**	10mm 25 x 6g	10mm 32 x 6g	10mm 41 x 6g
E3TRLa30-S39	13mm 25 x 6g	13mm 41 x 6g	13mm 41 x 6g

Fastener Centres

Framing Side: Fix at 300mm centres at sheet perimeter and up each stud.

Resilient Rail Side: Fix 300mm centres along each resilient rail.

Place fasteners minimum 12mm from sheet edges and sheet ends.

Place fasteners at 200mm centres where sheet end butt joints occur.

Avoid outer layer screws from hitting inner layer screws.

Lining screws to be fastened to the side of the studs and nogs, to ensure that they don't penetrate or touch the framing.

Acoustic Sealant

A bead of acoustic sealant is required around the perimeter of the framing or the inner layer. The single or outer layer is then bedded onto the bead. The perimeter junctions of the wall must be airtight.

Jointing

Inner Layer: Unstopped.

Outer or Single Layer: All fastener heads stopped and all sheet joints reinforced and stopped. Wall to ceiling junctions are to be reinforced with paper tape and square stopped or finished with Cornice. All in accordance with EPB® Plasterboard Installation Guide.

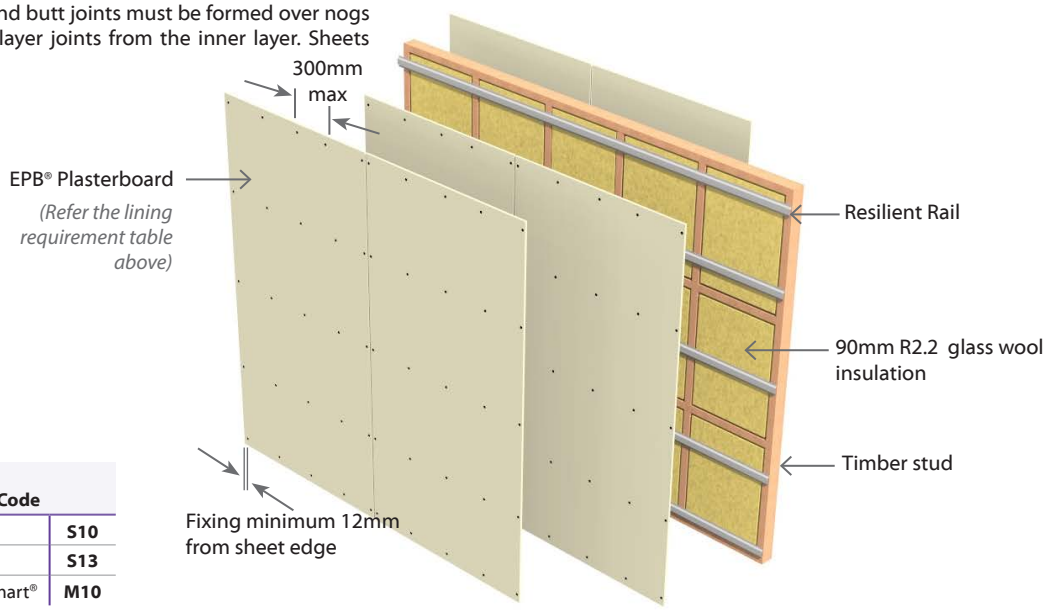

E3TRLa60 Single **T**imber Frame with Resilient **R**ail | **L**oad Bearing | Two Way FRR

3 Layers: 1 Layer of Plasterboard to Framing side & 2 Layers of Plasterboard to Rail side | Sub Intertenancy **a**coustic

System Number	Lining Suffix	FRR	Load Bearing Ability	Noise Control		Lining Requirement
				STC	Rw	
E3TRLa60	**-MS39**	60/60/60	LB	52	50	Framing Side: 1 x 13mm EPB BraceSmart®/NoiseSmart® Rail Side: 2 x 13mm EPB® Standard
	-M39	60/60/60	LB	52	51	Framing Side: 1 x 13mm EPB BraceSmart®/NoiseSmart® Rail Side: 2 x 13mm EPB BraceSmart®/NoiseSmart®

Framing

Framing to comply with relevant sections and clauses of NZBC B1: Structure and NZBC B2: Durability.

Studs at 600mm centres maximum.

Nogs at 1350mm centre maximum.

Wall Height, Load and Framing Dimension

These are determined by NZS3604 stud tables for load bearing or non-load bearing partitions. Minimum 90 x 45mm frame dimension.

Minimum Partition Width

In order to achieve the STC ratings in the table above the partition width (excluding the board) shall be a minimum of 130mm.

Stud Depth	Rail	Lining Suffix		Plasterboard	Total Partition
90mm	13mm	**S39**	**MS39**	39mm	142mm

Wall Sound Absorber

Install Sound Absorber between studs and nogs of the frame.
Use 90mm thick R2.2 glass wool insulation.

Acoustic Resilient Rail

The Resilient Rail shall be fixed to the studs at 600mm centres using 32mm x 8g wafer head self-tapping screws through the base flange and into each stud. The base flange to face downwards and resilient edge upwards. Channel may be joined by nesting together with no more than 20mm overlap. Fasten through both channels into stud. Highest resilient channel shall be fixed no more than 75mm from the ceiling line and the lowest channel, 50mm from the floor line.

Plasterboard Lining

NB: The installer must look for the Product Identification Code on the face paper to ensure the correct board type is installed. Refer to the Face Paper Product Identification Code table on this page.

One layer of EPB® Plasterboard lining fixed vertically on framing side and Two layers fixed vertically on the furring channel on the other side as per specified system above. Vertical joints of outer layer should be offset by 600mm from those of the inner layer. Use full height sheets where possible. All sheet joints on the framing side must be fixed over solid timber framing. Sheet end butt joints must be formed over nogs or rails and offset the outer layer joints from the inner layer. Sheets shall be touch fitted.

Fixing of Linings (Non Fire Rated)

Fix the linings as per the EPB Installation Guide. If an FRR is required then follow the Fixing of Linings instruction in the following paragraph.

Fixing of Linings (to achieve Fire Rating)

Fasteners (As per Specified System Above)

System Number	Resilient Rail Side		Framing Side
	1st Layer	2nd Layer	Single Layer
	Self-Tapping Drywall Screws		High Thread Drywall Screws
E3TRLa60-MS39 **E3TRLa60-M39**	13mm 25 x 6g	13mm 41 x 6g	13mm 41 x 6g

Fastener Centres

Framing Side: Fix at 300mm centres at sheet perimeter and up each stud.

Resilient Rail Side: Fix 300mm centres along each resilient rail.

Place fasteners minimum 12mm from sheet edges and sheet ends.

Place fasteners at 200mm centres where sheet end butt joints occur.

Avoid outer layer screws from hitting inner layer screws.

Lining screws to be fastened to the side of the studs and nogs, to ensure that they don't penetrate or touch the framing.

Acoustic Sealant

A bead of acoustic sealant is required around the perimeter of the framing or the inner layer. The single or outer layer is then bedded onto the bead. The perimeter junctions of the wall must be airtight.

Jointing

Inner Layer: Unstopped.

Outer or Single Layer: All fastener heads stopped and all sheet joints reinforced and stopped. Wall to ceiling junctions are to be reinforced with paper tape and square stopped or finished with Cornice. All in accordance with EPB® Plasterboard Installation Guide.

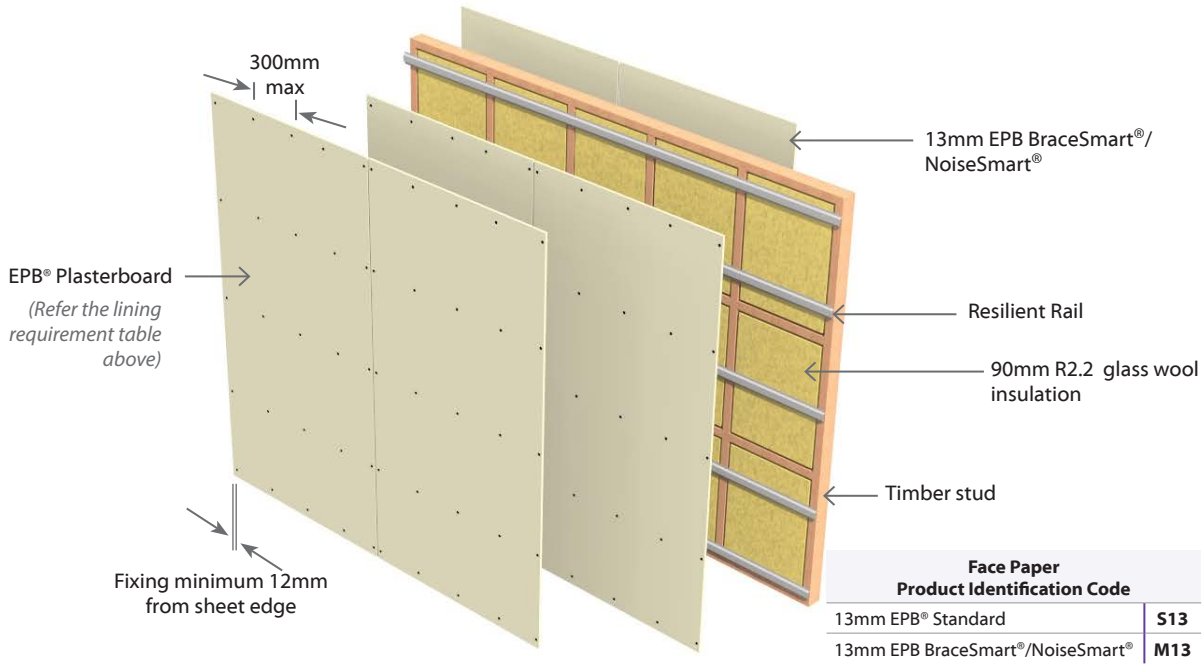

Face Paper Product Identification Code	
13mm EPB® Standard	**S13**
13mm EPB BraceSmart®/NoiseSmart®	**M13**

Sub Intertenancy Steel Frame Walls

E2Sa15 Single Steel Frame | Non Load Bearing | Two Way FRR

2 Layers: 1 Layer of Plasterboard to each side of frame | Sub Intertenancy **a**coustic

System Number	Lining Suffix	FRR	Load Bearing Ability	Noise Control		Lining Requirement
				STC	Rw	
E2Sa15	**-S20**	-/15/15	NLB	40	39	1 x 10mm EPB® Standard each side

Framing
Steel studs with minimum dimensions 64mm x 34mm x 0.55 BMT with 6mm return. Channels to be minimum size 64mm x 30mm x 0.55 BMT and are fixed to floor and ceiling. Studs are placed with a 15mm expansion gap at top of frame. Channel runners are fixed to the floor and ceiling in true alignment. The studs are not directly fixed to channel. The studs are held in place by the grip of the channel runners. No other fixing is to be used. Studs are placed at 600mm centres maximum.

Wall Heights
Recommended maximum height is 3.0m. Higher walls may be subject to specific engineering design or consult the framing manufacturer.

Wall Sound Absorber
Install Sound Absorber between studs of the frame.
Use 75mm thick R1.8 glass wool blanket.

Plasterboard Lining
NB: The installer must look for the Product Identification Code on the face paper to ensure the correct board type is installed. Refer to the Face Paper Product Identification Code table on this page.

One layer of 10mm EPB® Standard lining on each side of the steel framing.

Vertical fixing only permitted. Use full height or full length sheets where possible. Sheet edge and butt joints on opposite side of frame should be offset. All sheet joints must be fixed over steel framing. Sheet end butt joints must be formed over nogs. Sheets are fixed hard to the floor. Sheets shall be touch fitted.

Fixing of Linings (Non Fire Rated)
Fix the linings as per the EPB® Plasterboard Installation Guide. If an FRR is required then follow the Fixing of Linings instruction in the following paragraph.

Fixing of Linings (to achieve Fire Rating)
Fasteners

System Number	Side One	Side Two
	Single Layer	
	Self-Tapping Drywall Screws	
E2Sa15-S20	10mm	10mm
	25 x 6g	25 x 6g

Fastener Centres
Fix at 300mm centres up each stud with no fixing to top and bottom channel sections.

Place fasteners no closer than 12mm to the sheet edge and 50mm from sheet ends.

Place fasteners at 200mm centres where sheet end butt joints occur.

Acoustic Sealant
A bead of acoustic sealant is required around the perimeter of the framing and the single layer is bedded onto the bead. The perimeter junctions of the wall must be airtight.

Jointing
All fastener heads stopped and all sheet joints reinforced with paper jointing tape and stopped. Wall to ceiling junctions are to be reinforced with paper tape and square stopped or finished with Cornice. All in accordance with EPB® Plasterboard Installation Guide.

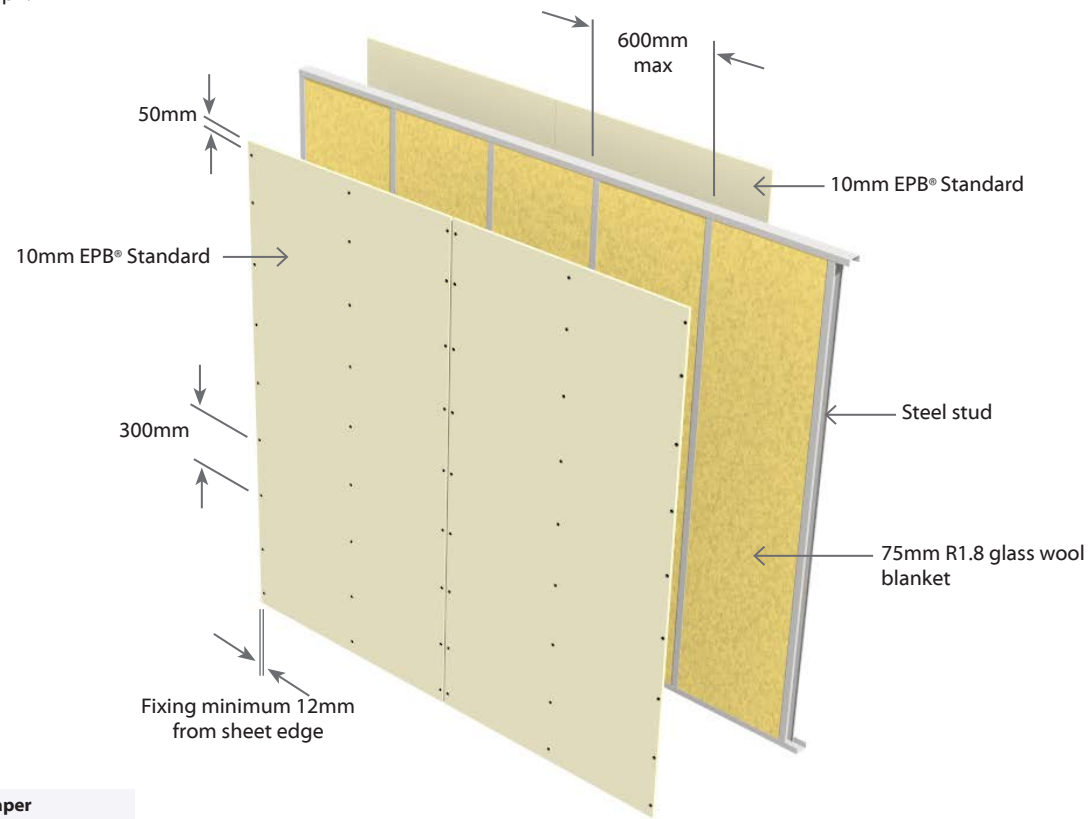

Face Paper Product Identification Code	
10mm EPB® Standard	**S10**

E2Sa30 Single Steel Frame | Non Load Bearing | Two Way FRR

2 Layers: 1 Layer of Plasterboard to each side of frame | Sub Intertenancy **a**coustic

System Number	Lining Suffix	FRR	Load Bearing Ability	Noise Control		Lining Requirement
				STC	Rw	
E2Sa30	**-S26**	-/30/30	NLB	41	40	1 x 13mm EPB® Standard each side
	-M20	-/30/30	NLB	42	41	1 x 10mm EPB BraceSmart®/NoiseSmart® each side

Framing

Steel studs with minimum dimensions 64mm x 34mm x 0.55 BMT with 6mm return. Channels to be minimum size 64mm x 30mm x 0.55 BMT and are fixed to floor and ceiling. Studs are placed with a 15mm expansion gap at top of frame. Channel runners are fixed to the floor and ceiling in true alignment. The studs are not directly fixed to channel. The studs are held in place by the grip of the channel runners. No other fixing is to be used. Studs are placed at 600mm centres maximum.

Wall Heights

Recommended maximum height is 3.0m. Higher walls may be subject to specific engineering design or consult the framing manufacturer.

Wall Sound Absorber

Install Sound Absorber between studs of the frame.
Use 75mm thick R1.8 glass wool blanket.

Plasterboard Lining

NB: The installer must look for the Product Identification Code on the face paper to ensure the correct board type is installed. Refer to the Face Paper Product Identification Code table on this page.

One layer of EPB® Plasterboard lining as per specified system above on each side of the steel framing.

Vertical fixing only permitted. Use full height or full length sheets where possible. Sheet edge and butt joints on opposite side of frame should be offset. All sheet joints must be fixed over steel framing. Sheet end butt joints must be formed over nogs. Sheets are fixed hard to the floor. Sheets shall be touch fitted.

Fixing of Linings (Non Fire Rated)

Fix the linings as per the EPB® Installation Guide. If an FRR is required then follow the Fixing of Linings instruction in the following paragraph.

Fixing of Linings (to achieve Fire Rating)

Fasteners (As per Specified System Above)

System Number	Side One	Side Two
	Single Layer	**Single Layer**
	Self-Tapping Drywall Screws	
E2Sa30-M20	10mm	10mm
	25 x 6g	25 x 6g
E2Sa30-S26	13mm	13mm
	25 x 6g	25 x 6g

Fastener Centres

Fix at 300mm centres up each stud with no fixing to top and bottom channel sections.

Place fasteners no closer than 12mm to the sheet edge and 50mm from sheet ends.

Place fasteners at 200mm centres where sheet end butt joints occur.

Acoustic Sealant

A bead of acoustic sealant is required around the perimeter of the framing and the single layer is bedded onto the bead. The perimeter junctions of the wall must be airtight.

Jointing

All fastener heads stopped and all sheet joints reinforced with paper jointing tape and stopped. Wall to ceiling junctions are to be reinforced with paper tape and square stopped or finished with Cornice. All in accordance with EPB® Plasterboard Installation Guide.

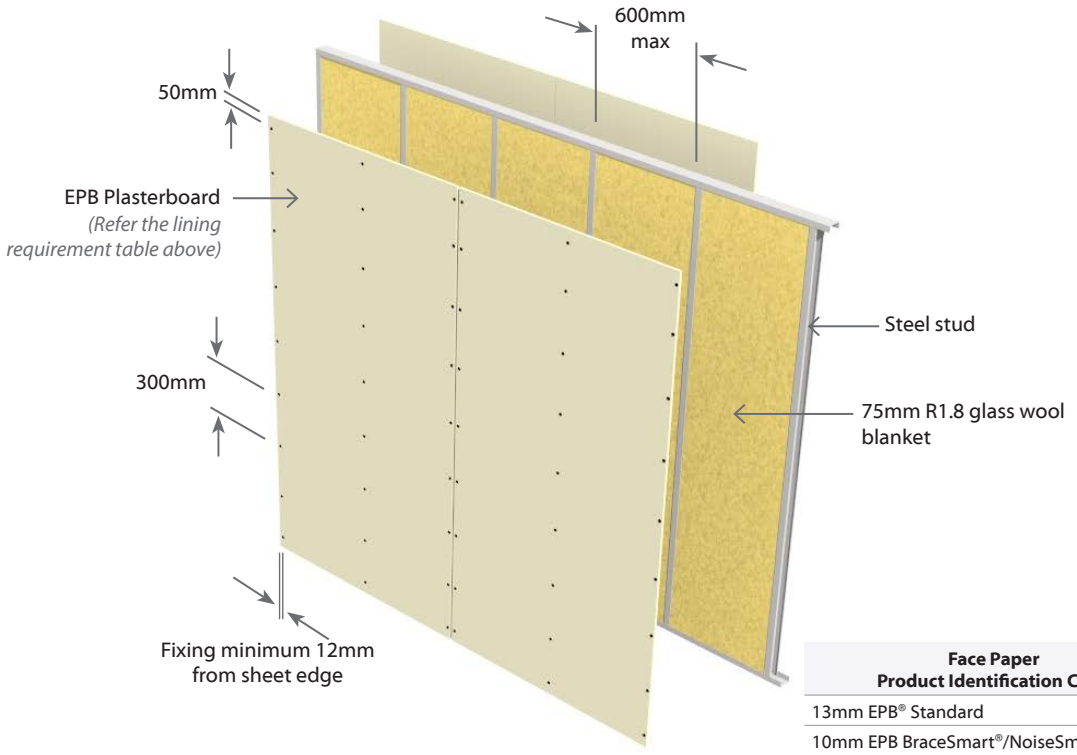

Face Paper Product Identification Code	
13mm EPB® Standard	**S13**
10mm EPB BraceSmart®/NoiseSmart®	**M10**

E3Sa30 Single Steel Frame | Non Load Bearing | Two Way FRR

3 Layers: 1 Layer of Plasterboard to one side of frame &
2 Layers of Plasterboard to other side of frame

Sub Intertenancy **a**coustic

System Number	Lining Suffix	FRR	Load Bearing Ability	Noise Control		Lining Requirement
				STC	Rw	
E3Sa30	**-S33**	-/30/30	NLB	43	42	1 x 13mm EPB® Standard one side 2 x 10mm EPB® Standard other side
	-S39	-/30/30	NLB	44	42	1 x 13mm EPB® Standard one side 2 x 13mm EPB® Standard other side
	-M30	-/30/30	NLB	44	43	1 x 10mm EPB BraceSmart®/NoiseSmart® one side 2 x 10mm EPB BraceSmart®/NoiseSmart® other side

Framing Non Load Bearing Systems

Steel studs with minimum dimensions 64mm x 34mm x 0.55 BMT with 6mm return. Channels to be minimum size 64mm x 30mm x 0.55 BMT and are fixed to floor and ceiling. Studs are placed with a 15mm expansion gap at top of frame. Channel runners are fixed to the floor and ceiling in true alignment. The studs are not directly fixed to channel. The studs are held in place by the grip of the channel runners. No other fixing is to be used. Studs are placed at 600mm centres maximum.

Wall Heights

Recommended maximum height is 3.0m. Higher walls may be subject to specific engineering design or consult the framing manufacturer.

Wall Sound Absorber

Install Sound Absorber between studs of the frame.
Use 75mm thick R1.8 glass wool blanket.

Plasterboard Lining

NB: The installer must look for the Product Identification Code on the face paper to ensure the correct board type is installed. Refer to the Face Paper Product Identification Code table on this page.

One layer of EPB® Plasterboard to one side and Two layers to the Other Side as per specified system above.

Vertical fixing only permitted. Use full height sheets where possible. Inner layer joints on opposite side of frame should be offset. All sheet joints must be fixed over steel framing. Vertical joints of the outer layer should be offset by 600mm to those of the inner layer. Sheet end butt joints must be formed over nogs and offset the outer layer joints from the inner layer. The inner layers are fixed hard to the floor. Sheets shall be touch fitted.

Fixing of Linings (Non Fire Rated)

Fix the linings as per the EPB® Plasterboard Installation Guide. If an FRR is required then follow the Fixing of Linings instruction in the following paragraph.

Fixing of Linings (to achieve Fire Rating)

Fasteners (As per Specified System Above)

System Number	Side One		Side Two
	1st Layer	2nd Layer	Single Layer
	Self-Tapping Drywall Screws		
E3Sa30-M30	10mm	10mm	10mm
	25 x 6g	32 x 6g	25 x 6g
E3Sa30-S33	10mm	10mm	13mm
	25 x 6g	32 x 6g	25 x 6g
E3Sa30-S39	13mm	13mm	13mm
	25 x 6g	41 x 6g	25 x 6g

Fastener Centres

Inner Layer: Fix at 600mm centres up each stud with no fixing to top or bottom channel sections.

Outer or Single Layer: Fix at 300mm centres up each stud with no fixing to top and bottom channel sections.

Place fasteners no closer than 12mm to the sheet edge and 50mm from sheet ends. Place fasteners at 200mm centres where sheet end butt joints occur. Avoid outer layer screws from hitting inner layer screws.

Acoustic Sealant

A bead of acoustic sealant must be placed on the perimeter of the framing or the inner layer. The single or outer layer is then bedded onto the bead. The perimeter junctions of the wall must be airtight.

Jointing

Inner Layer: Unstopped

Outer or Single Layer: All fastener heads stopped and all sheet joints reinforced with paper jointing tape and stopped. Wall to ceiling junctions are to be reinforced with paper tape and square stopped or finished with Cornice. All in accordance with EPB® Plasterboard Installation Guide.

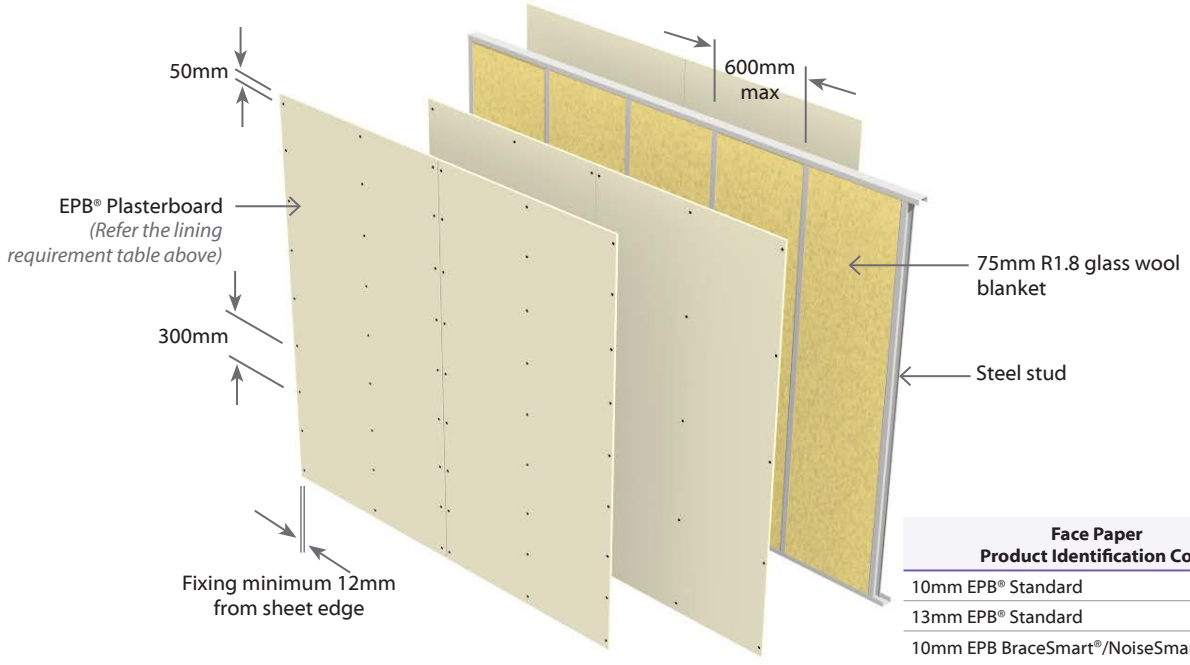

Face Paper Product Identification Code	
10mm EPB® Standard	**S10**
13mm EPB® Standard	**S13**
10mm EPB BraceSmart®/NoiseSmart®	**M10**

E4Sa45 Single **S**teel Frame | Non Load Bearing | Two Way FRR

4 Layers: 2 Layers of Plasterboard to each side of frame | Sub Intertenancy **a**coustic

System Number	Lining Suffix	FRR	Load Bearing Ability	Noise Control		Lining Requirement
				STC	Rw	
E4Sa45	**-S40**	-/45/45	NLB	45	44	2 x 10mm EPB® Standard each side

Framing Non Load Bearing Systems

Steel studs with minimum dimensions 64mm x 34mm x 0.55 BMT with 6mm return. Channels to be minimum size 64mm x 30mm x 0.55 BMT and are fixed to floor and ceiling. Studs are placed with a 15mm expansion gap at top of frame. Channel runners are fixed to the floor and ceiling in true alignment. The studs are not directly fixed to channel. The studs are held in place by the grip of the channel runners. No other fixing is to be used. Studs are placed at 600mm centres maximum.

Wall Heights

Recommended maximum height is 3.0m. Higher walls may be subject to specific engineering design or consult the framing manufacturer.

Wall Sound Absorber

Install Sound Absorber between studs of the frame.
Use 75mm thick R1.8 glass wool blanket.

Plasterboard Lining

NB: The installer must look for the Product Identification Code on the face paper to ensure the correct board type is installed. Refer to the Face Paper Product Identification Code table on this page.

Two layers of 10mm EPB® Standard linings to each side of the steel framing.

Vertical fixing only permitted. Use full height sheets where possible. Inner layer joints on opposite side of frame should be offset. All sheet joints must be fixed over steel framing. Vertical joints of the outer layer should be offset by 600mm to those of the inner layer. Sheet end butt joints must be formed over nogs and offset the outer layer joints from the inner layer. The inner layers are fixed hard to the floor. Sheets shall be touch fitted.

Fixing of Linings (Non Fire Rated)

Fix the linings as per the EPB® Plasterboard Installation Guide. If an FRR is required then follow the Fixing of Linings instruction in the following paragraph.

Fixing of Linings (to achieve Fire Rating)

Fasteners

System Number	Side One		Side two	
	1st Layer	2nd Layer	1st Layer	2nd Layer
	Self-Tapping Drywall Screws			
E4Sa45-S40	10mm	10mm	10mm	10mm
	25 x 6g	32 x 6g	25 x 6g	32 x 6g

Fastener Centres

Inner Layer: Fix at 600mm centres up each stud with no fixing to top or bottom channel sections.

Outer Layer: Fix at 300mm centres up each stud with no fixing to top and bottom channel sections.

Place fasteners no closer than 12mm to the sheet edge and 50mm from sheet ends.

Place fasteners at 200mm centres where sheet end butt joints occur.

Avoid outer layer screws from hitting inner layer screws.

Acoustic Sealant

A bead of acoustical sealant is required around the perimeter of the inner layer and the outer layer is bedded onto the bead. The perimeter junctions of the wall must be airtight.

Jointing

Inner Layer: Unstopped.

Outer Layer: All fastener heads stopped and all sheet joints reinforced with paper jointing tape and stopped. Wall to ceiling junctions are to be reinforced with paper tape and square stopped or finished with Cornice. All in accordance with EPB® Plasterboard Installation Guide.

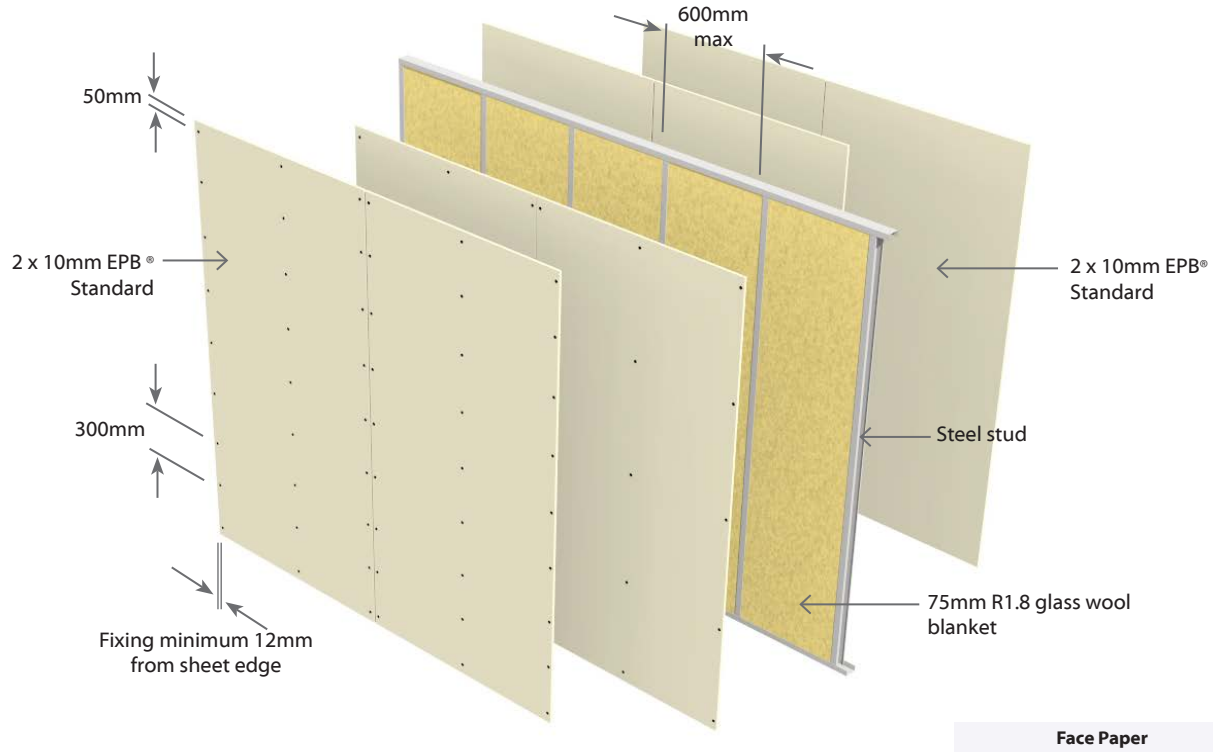

Face Paper Product Identification Code	
10mm EPB® Standard	**S10**

E2Sa60 Single Steel Frame | Non Load Bearing | Two Way FRR

2 Layers: 1 Layer of Plasterboard to each side of frame | Sub Intertenancy **a**coustic

System Number	Lining Suffix	FRR	Load Bearing Ability	Noise Control		Lining Requirement
				STC	Rw	
E2Sa60	**-M26**	-/60/60	NLB	43	42	1 x 13mm EPB BraceSmart®/NoiseSmart® each side

Framing
Steel studs with minimum dimensions 64mm x 34mm x 0.55 BMT with 6mm return. Channels to be minimum size 64mm x 30mm x 0.55 BMT and are fixed to floor and ceiling. Studs are placed with a 15mm expansion gap at top of frame. Channel runners are fixed to the floor and ceiling in true alignment. The studs are not directly fixed to channel. The studs are held in place by the grip of the channel runners. No other fixing is to be used. Studs are placed at 600mm centres maximum.

Wall Heights
Recommended maximum height is 3.0m. Higher walls may be subject to specific engineering design or consult the framing manufacturer.

Wall Sound Absorber
Install Sound Absorber between studs of the frame.
Use 75mm thick R1.8 glass wool blanket.

Plasterboard Lining
NB: The installer must look for the Product Identification Code on the face paper to ensure the correct board type is installed. Refer to the Face Paper Product Identification Code table on this page.

One layer of 13mm EPB BraceSmart®/NoiseSmart® lining to each side of the steel framing.

Vertical fixing only permitted. Use full height or full length sheets where possible. Sheet edge and butt joints on opposite side of frame should be offset. All sheet joints must be fixed over steel framing. Sheet end butt joints must be formed over nogs. Sheets are fixed hard to the floor. Sheets shall be touch fitted.

Fixing of Linings (Non Fire Rated)
Fix the linings as per the EPB® Plasterboard Installation Guide. If an FRR is required then follow the Fixing of Linings instruction in the following paragraph.

Fixing of Linings (to achieve Fire Rating)
Fasteners

System Number	Side One	Side Two
	Single Layer	
	Self-Tapping Drywall Screws	
E2Sa60-M26	13mm	
	25 x 6g	

Fastener Centres
Fix at 300mm centres up each stud with no fixing to top and bottom channel sections.

Place fasteners no closer than 12mm to the sheet edge and 50mm from sheet ends.

Place fasteners at 200mm centres where sheet end butt joints occur.

Acoustic Sealant
A bead of acoustic sealant is required around the perimeter of the framing and the single layer is bedded onto the bead. The perimeter junctions of the wall must be airtight.

Jointing
All fastener heads stopped and all sheet joints reinforced with paper jointing tape and stopped. Wall to ceiling junctions are to be reinforced with paper tape and square stopped or finished with Cornice. All in accordance with EPB® Plasterboard Installation Guide.

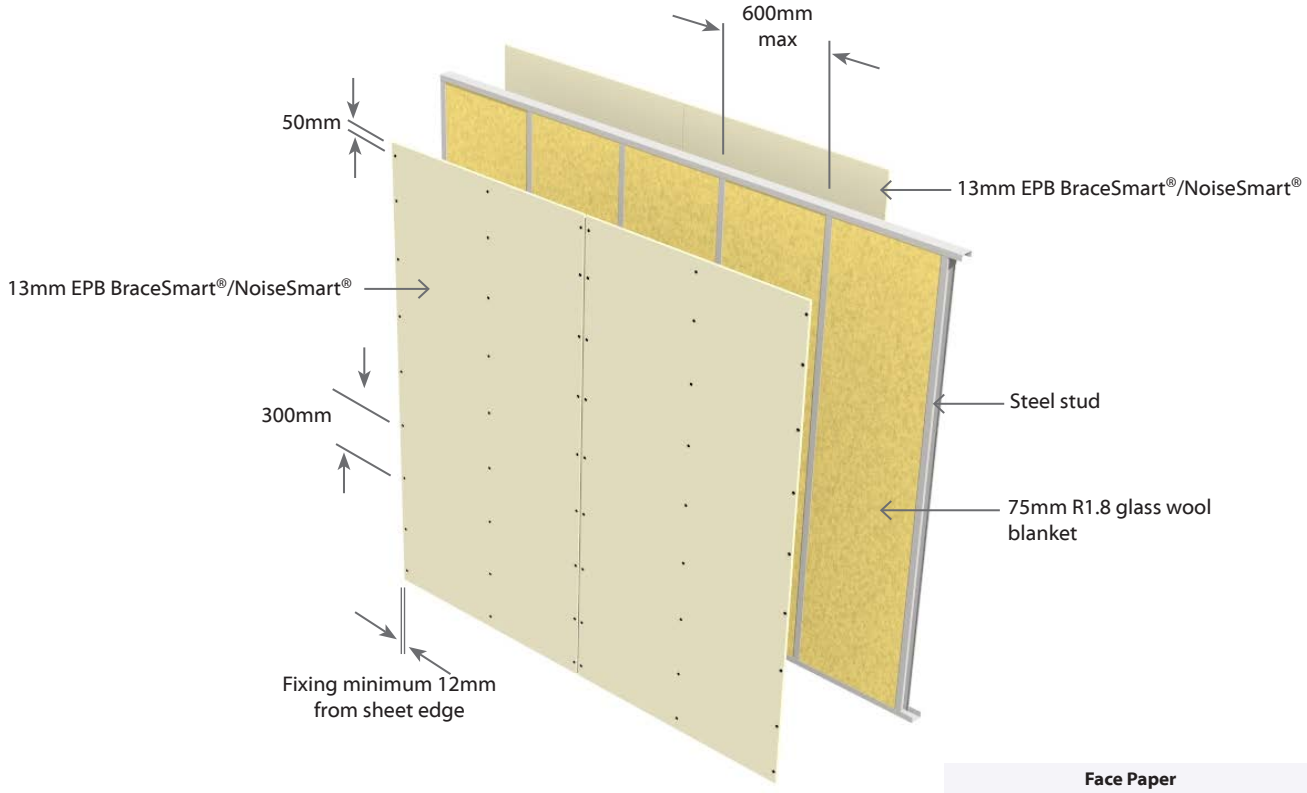

Face Paper Product Identification Code	
13mm EPB BraceSmart®/NoiseSmart®	**M13**

E3Sa60 | Single **S**teel Frame | Non Load Bearing | Two Way FRR

3 Layers: 1 Layer of Plasterboard to one side of the frame &
2 Layers of Plasterboard to other side of the frame

Sub Intertenancy **a**coustic

System Number	Lining Suffix	FRR	Load Bearing Ability	Noise Control		Lining Requirement
				STC	Rw	
E3Sa60	**-MS39**	-/60/60	NLB	44	43	1 x 13mm EPB BraceSmart®/NoiseSmart® one side 2 x 13mm EPB® Standard other side
	-M39	-/60/60	NLB	45	44	1 x 13mm EPB BraceSmart®/NoiseSmart® one side 2 x 13mm EPB BraceSmart®/NoiseSmart® other side

Framing Non Load Bearing Systems

Steel studs with minimum dimensions 64mm x 34mm x 0.55 BMT with 6mm return. Channels to be minimum size 64mm x 30mm x 0.55 BMT and are fixed to floor and ceiling. Studs are placed with a 15mm expansion gap at top of frame. Channel runners are fixed to the floor and ceiling in true alignment. The studs are not directly fixed to channel. The studs are held in place by the grip of the channel runners. No other fixing is to be used. Studs are placed at 600mm centres maximum.

Wall Heights

Recommended maximum height is 3.0m. Higher walls may be subject to specific engineering design or consult the framing manufacturer.

Wall Sound Absorber

Install Sound Absorber between studs of the frame.
Use 75mm thick R1.8 glass wool blanket.

Plasterboard Lining

NB: The installer must look for the Product Identification Code on the face paper to ensure the correct board type is installed. Refer to the Face Paper Product Identification Code table on this page.

One layer of EPB® Plasterboard to one side and Two layers to the Other Side as per specified system above.

Vertical fixing only permitted. Use full height sheets where possible. Inner layer joints on opposite side of frame should be offset. All sheet joints must be fixed over steel framing. Vertical joints of the outer layer should be offset by 600mm to those of the inner layer. Sheet end butt joints must be formed over nogs and offset the outer layer joints from the inner layer. The inner layers are fixed hard to the floor. Sheets shall be touch fitted.

Fixing of Linings (Non Fire Rated)

Fix the linings as per theEPB® Plasterboard Installation Guide. If an FRR is required then follow the Fixing of Linings instruction in the following paragraph.

Fixing of Linings (to achieve Fire Rating)

Fasteners

System Number	Side One		Side Two
	1st Layer	2nd Layer	Single Layer
	Self-Tapping Drywall Screws		
E3Sa60-MS39 **E3Sa60-M39**	13mm 25 x 6g	13mm 41 x 6g	13mm 25 x 6g

Fastener Centres

Inner Layer: Fix at 600mm centres up each stud with no fixing to top or bottom channel sections.

Outer or Single Layer: Fix at 300mm centres up each stud with no fixing to top and bottom channel sections.

Place fasteners no closer than 12mm to the sheet edge and 50mm from sheet ends.

Place fasteners at 200mm centres where sheet end butt joints occur.

Avoid outer layer screws from hitting inner layer screws.

Acoustic Sealant

A bead of acoustic sealant must be placed on the perimeter of the framing or the inner layer. The single or outer layer is then bedded onto the bead. The perimeter junctions of the wall must be airtight.

Jointing

Inner Layer: Unstopped

Outer or Single Layer: All fastener heads stopped and all sheet joints reinforced with paper jointing tape and stopped. Wall to ceiling junctions are to be reinforced with paper tape and square stopped or finished with Cornice. All in accordance with EPB® Plasterboard Installation Guide.

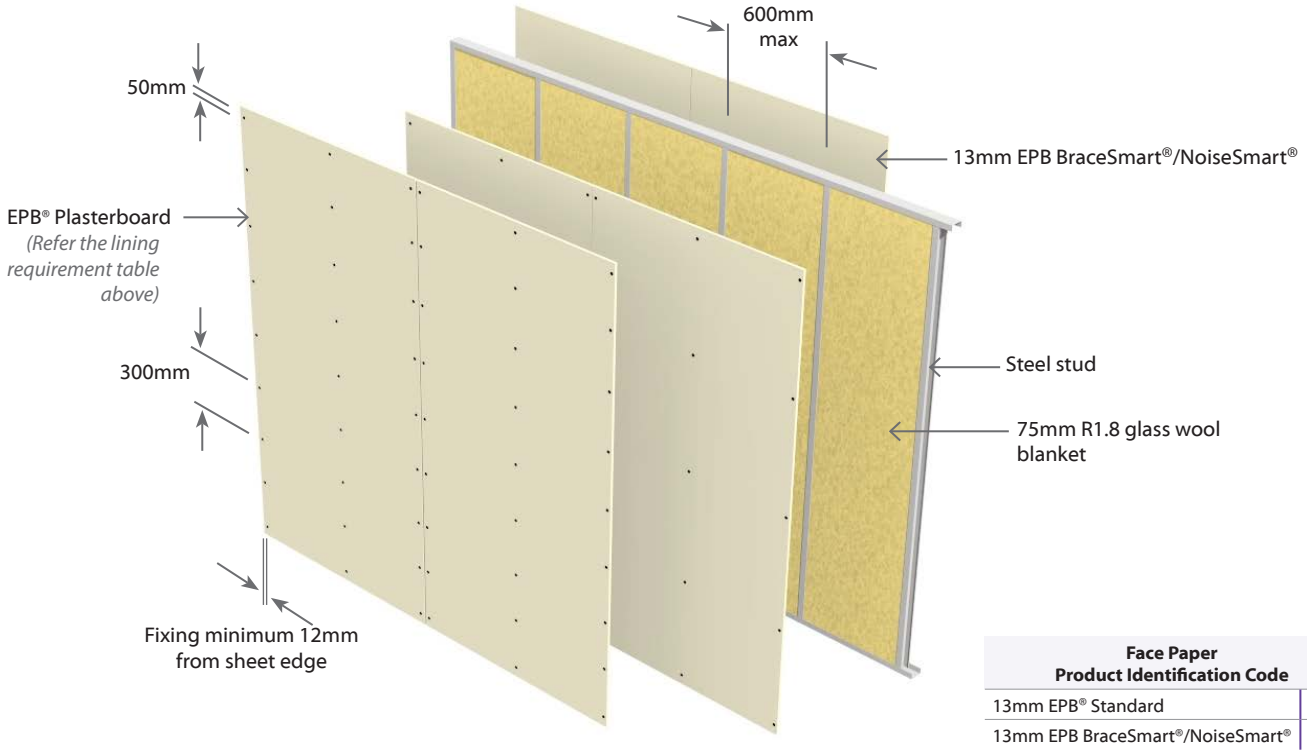

Face Paper Product Identification Code	
13mm EPB® Standard	**S13**
13mm EPB BraceSmart®/NoiseSmart®	**M13**

E4Sa60 Single Steel Frame | Non Load Bearing | Two Way FRR

4 Layers: 2 Layers of Plasterboard to each side of frame | Sub Intertenancy **a**coustic

System Number	Lining Suffix	FRR	Load Bearing Ability	Noise Control		Lining Requirement
				STC	Rw	
E4Sa60	**-S46**	-/60/60	NLB	46	45	1 x 10mm EPB® Standard & 1 x 13mm EPB® Standard each side
	-S52	-/60/60	NLB	48	47	2 x 13mm EPB® Standard each side
	-M40	-/60/60	NLB	48	47	2 x 10mm EPB BraceSmart®/NoiseSmart® each side

Framing Non Load Bearing Systems

Steel studs with minimum dimensions 64mm x 34mm x 0.55 BMT with 6mm return. Channels to be minimum size 64mm x 30mm x 0.55 BMT and are fixed to floor and ceiling. Studs are placed with a 15mm expansion gap at top of frame. Channel runners are fixed to the floor and ceiling in true alignment. The studs are not directly fixed to channel. The studs are held in place by the grip of the channel runners. No other fixing is to be used. Studs are placed at 600mm centres maximum.

Wall Heights

Recommended maximum height is 3.0m. Higher walls may be subject to specific engineering design or consult the framing manufacturer.

Wall Sound Absorber

Install Sound Absorber between studs of the frame.
Use 75mm thick R1.8 glass wool blanket.

Plasterboard Lining

NB: The installer must look for the Product Identification Code on the face paper to ensure the correct board type is installed. Refer to the Face Paper Product Identification Code table on this page.

Two layers of EPB® Plasterboard to one side and Two layers to the Other side as per specified system above.

Vertical fixing only permitted. Use full height sheets where possible. Inner layer joints on opposite side of frame should be offset. All sheet joints must be fixed over steel framing. Vertical joints of the outer layer should be offset by 600mm to those of the inner layer. Sheet end butt joints must be formed over nogs and offset the outer layer joints from the inner layer. The inner layers are fixed hard to the floor. Sheets shall be touch fitted.

Fixing of Linings (Non Fire Rated)

Fix the linings as per the EPB® Installation Guide. If an FRR is required then follow the Fixing of Linings instruction in the following paragraph.

Fixing of Linings (to achieve Fire Rating)

Fasteners (As per Specified System Above)

System Number	Side One		Side two	
	1st Layer	2nd Layer	1st Layer	2nd Layer
	Self-Tapping Drywall Screws			
E4Sa60-M40	10mm	10mm	10mm	10mm
	25 x 6g	32 x 6g	25 x 6g	32 x 6g
E4Sa60-S46	10mm	13mm	10mm	13mm
	25 x 6g	41 x 6g	25 x 6g	41 x 6g
E4Sa60-S52	13mm	13mm	13mm	13mm
	25 x 6g	41 x 6g	25 x 6g	41 x 6g

Fastener Centres

Inner Layer: Fix at 600mm centres up each stud with no fixing to top or bottom channel sections.

Outer Layer: Fix at 300mm centres up each stud with no fixing to top and bottom channel sections.

Place fasteners no closer than 12mm to the sheet edge and 50mm from sheet ends.

Place fasteners at 200mm centres where sheet end butt joints occur.

Avoid outer layer screws from hitting inner layer screws.

Acoustic Sealant

A bead of acoustic sealant must be placed on the perimeter of the framing or the inner layer. The outer layer is then bedded onto the bead. The perimeter junctions of the wall must be airtight.

Jointing

Inner Layer: Unstopped.

Outer Layer: All fastener heads stopped and all sheet joints reinforced with paper jointing tape and stopped. Wall to ceiling junctions are to be reinforced with paper tape and square stopped or finished with Cornice. All in accordance with EPB® Plasterboard Installation Guide.

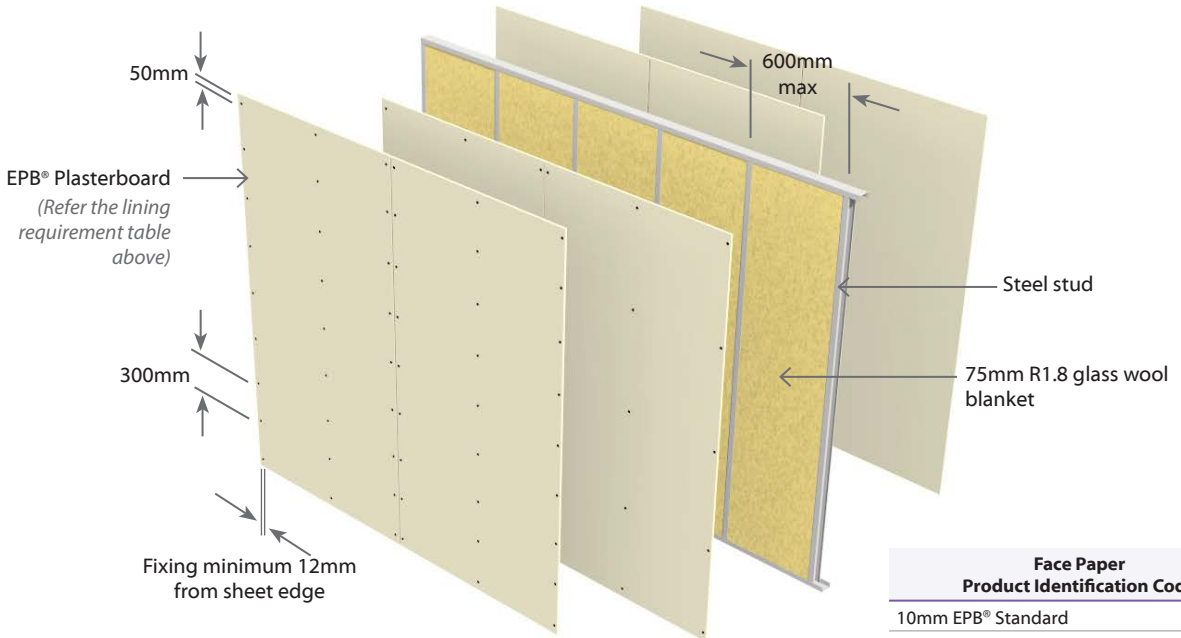

Face Paper Product Identification Code	
10mm EPB® Standard	**S10**
13mm EPB® Standard	**S13**
10mm EPB BraceSmart®/NoiseSmart®	**M10**

E4Sa90 Single Steel Frame | Non Load Bearing | Two Way FRR

4 Layers: 2 Layers of Plasterboard to each side of frame | Sub Intertenancy acoustic

System Number	Lining Suffix	FRR	Load Bearing Ability	Noise Control		Lining Requirement
				STC	Rw	
E4Sa90	**-M46**	-/90/90	NLB	50	49	1 x 10mm & 1 x 13mm EPB BraceSmart®/NoiseSmart® each side

Framing Non Load Bearing Systems
Steel studs with minimum dimensions 64mm x 34mm x 0.55 BMT with 6mm return. Channels to be minimum size 64mm x 30mm x 0.55 BMT and are fixed to floor and ceiling. Studs are placed with a 15mm expansion gap at top of frame. Channel runners are fixed to the floor and ceiling in true alignment. The studs are not directly fixed to channel. The studs are held in place by the grip of the channel runners. No other fixing is to be used. Studs are placed at 600mm centres maximum.

Wall Heights
Recommended maximum height is 3.0m. Higher walls may be subject to specific engineering design or consult the framing manufacturer.

Wall Sound Absorber
Install Sound Absorber between studs of the frame.
Use 75mm thick R1.8 glass wool blanket.

Plasterboard Lining
NB: The installer must look for the Product Identification Code on the face paper to ensure the correct board type is installed. Refer to the Face Paper Product Identification Code table on this page.

One layer of 10mm EPB BraceSmart®/NoiseSmart® and One layer of 13mm EPB BraceSmart®/NoiseSmart® to each side of the steel framing.

Vertical fixing only permitted. Use full height sheets where possible. Inner layer joints on opposite side of frame should be offset. All sheet joints must be fixed over steel framing. Vertical joints of the outer layer should be offset by 600mm to those of the inner layer. Sheet end butt joints must be formed over nogs and offset the outer layer joints from the inner layer. The inner layers are fixed hard to the floor. Sheets shall be touch fitted.

Fixing of Linings (Non Fire Rated)
Fix the linings as per the EPB® Installation Guide. If an FRR is required then follow the Fixing of Linings instruction in the following paragraph.

Fixing of Linings (to achieve Fire Rating)
Fasteners

System Number	Side One		Side Two	
	1st Layer	2nd Layer	1st Layer	2nd Layer
	Self-Tapping Drywall Screws			
E4Sa90-M46	10mm	13mm	10mm	13mm
	25 x 6g	41 x 6g	25 x 6g	41 x 6g

Fastener Centres
Inner Layer: Fix at 600mm centres up each stud with no fixing to top or bottom channel sections.

Outer Layer: Fix at 300mm centres up each stud with no fixing to top and bottom channel sections.

Place fasteners no closer than 12mm to the sheet edge and 50mm from sheet ends.

Place fasteners at 200mm centres where sheet end butt joints occur.

Avoid outer layer screws from hitting inner layer screws.

Acoustic Sealant
A bead of acoustic sealant must be placed on the perimeter of the framing or the inner layer. The outer layer is then bedded onto the bead. The perimeter junctions of the wall must be airtight.

Jointing
Inner Layer: Unstopped.

Outer Layer: All fastener heads stopped and all sheet joints reinforced with paper jointing tape and stopped. Wall to ceiling junctions are to be reinforced with paper tape and square stopped or finished with Cornice. All in accordance with EPB® Plasterboard Installation Guide.

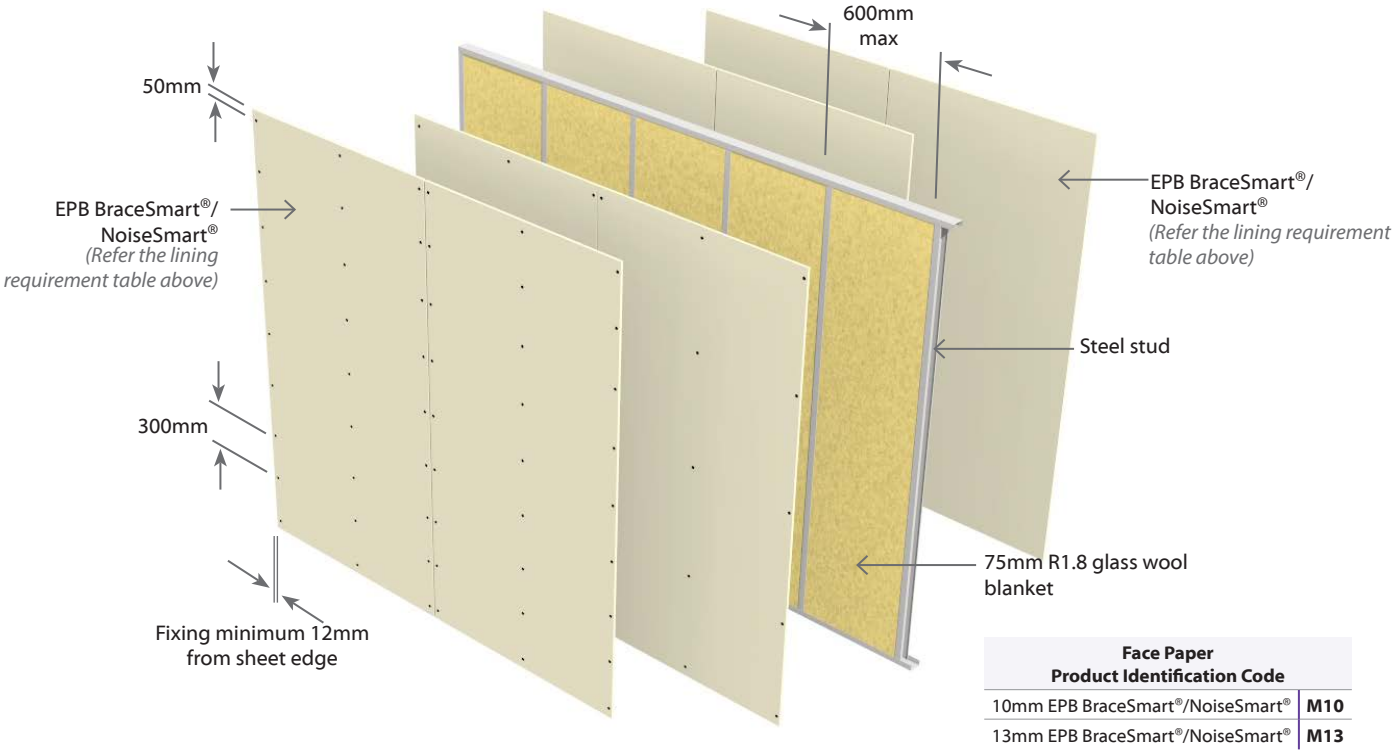

Face Paper Product Identification Code	
10mm EPB BraceSmart®/NoiseSmart®	**M10**
13mm EPB BraceSmart®/NoiseSmart®	**M13**

E4Sa105 Single Steel Frame | Non Load Bearing | Two Way FRR

4 Layers: 2 Layers of Plasterboard to each side of frame | Sub Intertenancy acoustic

System Number	Lining Suffix	FRR	Load Bearing Ability	Noise Control		Lining Requirement
				STC	Rw	
E4Sa105	**-M52**	-/105/105	NLB	52	51	2 x 13mm EPB BraceSmart®/NoiseSmart® each side

Framing Non Load Bearing Systems

Steel studs with minimum dimensions 64mm x 34mm x 0.55 BMT with 6mm return. Channels to be minimum size 64mm x 30mm x 0.55 BMT and are fixed to floor and ceiling. Studs are placed with a 15mm expansion gap at top of frame. Channel runners are fixed to the floor and ceiling in true alignment. The studs are not directly fixed to channel. The studs are held in place by the grip of the channel runners. No other fixing is to be used. Studs are placed at 600mm centres maximum.

Wall Heights

Recommended maximum height is 3.0m. Higher walls may be subject to specific engineering design or consult the framing manufacturer.

Wall Sound Absorber

Install Sound Absorber between studs of the frame.
Use 75mm thick R1.8 glass wool blanket.

Plasterboard Lining

NB: The installer must look for the Product Identification Code on the face paper to ensure the correct board type is installed. Refer to the Face Paper Product Identification Code table on this page.

Two layers of 13mm EPB BraceSmart®/NoiseSmart® to each side of the steel framing.

Vertical fixing only permitted. Use full height sheets where possible. Inner layer joints on opposite side of frame should be offset. All sheet joints must be fixed over steel framing. Vertical joints of the outer layer should be offset by 600mm to those of the inner layer. Sheet end butt joints must be formed over nogs and offset the outer layer joints from the inner layer. The inner layers are fixed hard to the floor. Sheets shall be touch fitted.

Fixing of Linings (Non Fire Rated)

Fix the linings as per the EPB® Plasterboard Installation Guide. If an FRR is required then follow the Fixing of Linings instruction in the following paragraph.

Fixing of Linings (to achieve Fire Rating)

Fasteners

System Number	Side One		Side Two	
	1st Layer	2nd Layer	1st Layer	2nd Layer
	Self-Tapping Drywall Screws			
E4Sa105-M52	13mm	13mm	13mm	13mm
	25 x 6g	41 x 6g	25 x 6g	41 x 6g

Fastener Centres

Inner Layer: Fix at 600mm centres up each stud with no fixing to top or bottom channel sections.

Outer Layer: Fix at 300mm centres up each stud with no fixing to top and bottom channel sections.

Place fasteners no closer than 12mm to the sheet edge and 50mm from sheet ends.

Place fasteners at 200mm centres where sheet end butt joints occur.

Avoid outer layer screws from hitting inner layer screws.

Acoustic Sealant

A bead of acoustic sealant must be placed on the perimeter of the framing or the inner layer. The outer layer is then bedded onto the bead. The perimeter junctions of the wall must be airtight.

Jointing

Inner Layer: Unstopped.

Outer Layer: All fastener heads stopped and all sheet joints reinforced with paper jointing tape and stopped. Wall to ceiling junctions are to be reinforced with paper tape and square stopped or finished with Cornice. All in accordance with EPB® Plasterboard Installation Guide.

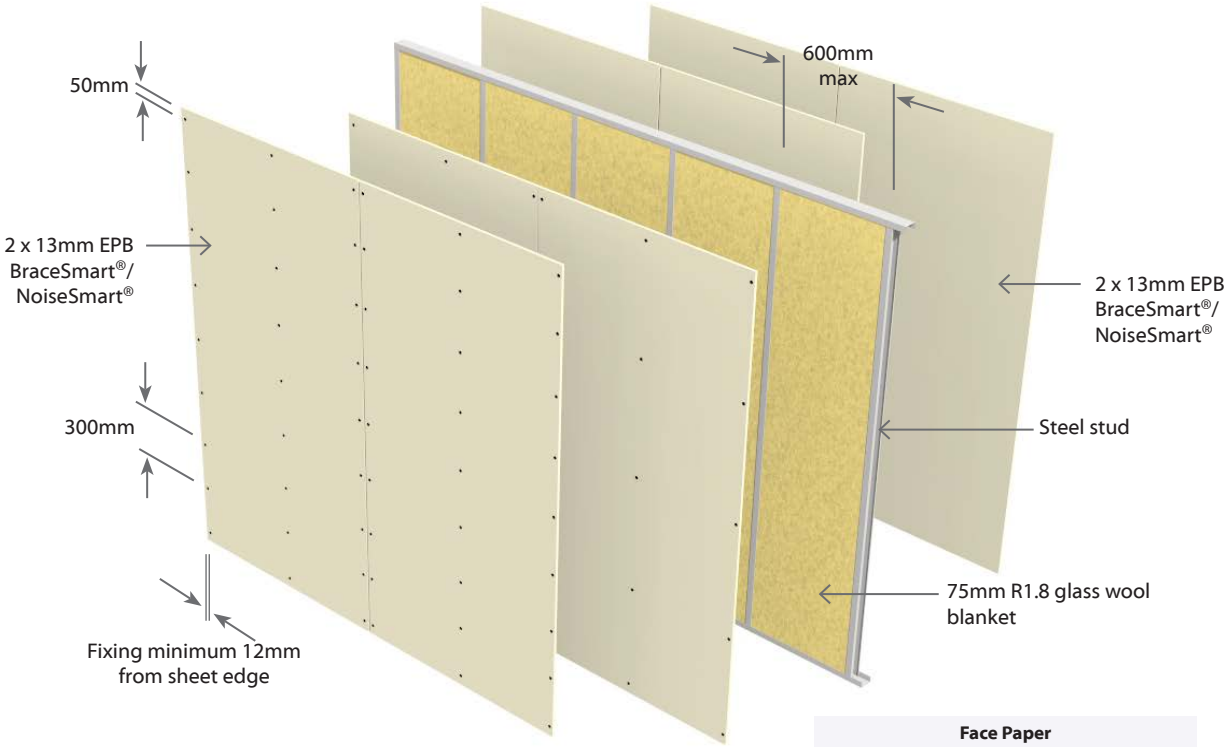

Face Paper Product Identification Code	
13mm EPB BraceSmart®/NoiseSmart®	**M13**

E2SLa30 Single Steel Frame | Load Bearing | Two Way FRR

2 Layers: 1 Layer of Plasterboard to each side of frame | Sub Intertenancy acoustic

System Number	Lining Suffix	FRR	Load Bearing Ability	Noise Control		Lining Requirement
				STC	Rw	
E2SLa30	**-M26**	30/30/30	LB	43	42	1 x 13mm EPB BraceSmart®/NoiseSmart® each side

Framing
Any steel frame designed to meet structural criteria for strength and serviceability under dead and live loads.
Stud width shall be 35mm minimum.
Stud spacing's at 600 centres maximum.
Frame heights as determined by specific design.

Wall Sound Absorber
Install Sound Absorber between studs of the frame.
Use 75mm thick R1.8 glass wool blanket.

Plasterboard Lining
NB: The installer must look for the Product Identification Code on the face paper to ensure the correct board type is installed. Refer to the Face Paper Product Identification Code table on this page.

One layer of 13mm EPB BraceSmart®/NoiseSmart® lining on each side of the steel framing.

Vertical fixing only permitted. Use full height or full length sheets where possible. Sheet edge and butt joints on opposite side of frame should be offset. All sheet joints must be fixed over steel framing. Sheet end butt joints must be formed over nogs. Sheets are fixed hard to the floor. Sheets shall be touch fitted.

Fixing of Linings (Non Fire Rated)
Fix the linings as per the EPB® Plasterboard Installation Guide. If an FRR is required then follow the Fixing of Linings instruction in the following paragraph.

Fixing of Linings (to achieve Fire Rating)
Fasteners

System Number	Side One	Side Two
	Single Layer	**Single Layer**
	Self-Tapping Drywall Screws	
E2SLa30-M26	13mm	13mm
	25 x 6g	25 x 6g

Fastener Centres
Fix at 300mm centres up each stud with no fixing to top and bottom channel sections.

Place fasteners no closer than 12mm to the sheet edge and 50mm from sheet ends.

Place fasteners at 200mm centres where sheet end butt joints occur

Acoustic Sealant
A bead of acoustic sealant is required around the perimeter of the framing and the single layer is bedded into the bead. The perimeter junctions of the wall must be airtight.

Jointing
All fastener heads stopped and all sheet joints reinforced with paper jointing tape and stopped. Wall to ceiling junctions are to be reinforced with paper tape and square stopped or finished with Cornice. All in accordance with EPB® Plasterboard Installation Guide.

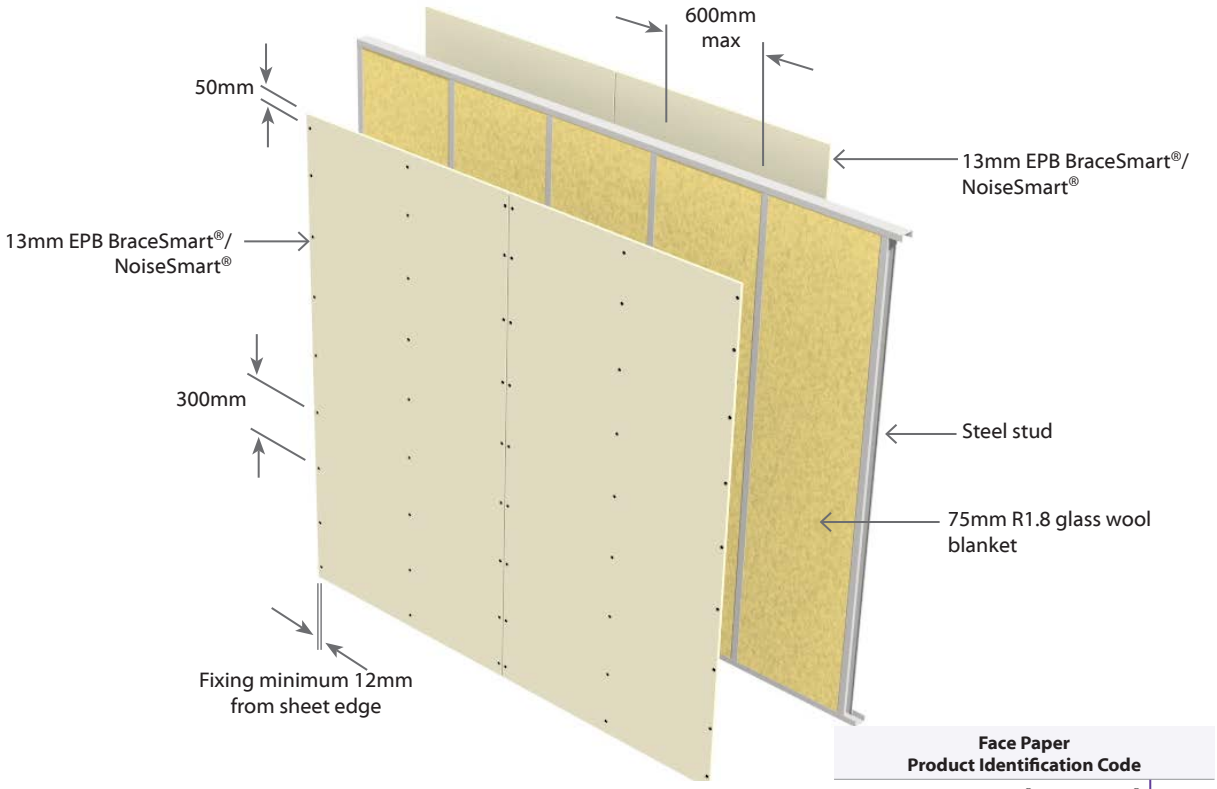

Face Paper Product Identification Code	
13mm EPB BraceSmart®/NoiseSmart®	**M13**

E3SLa30	Single **S**teel Frame	**L**oad Bearing	Two Way FRR

3 Layers: 1 Layer of Plasterboard to one side of frame &
2 Layers of Plasterboard to other side of frame

Sub Intertenancy **a**coustic

System Number	Lining Suffix	FRR	Load Bearing Ability	Noise Control		Lining Requirement
				STC	Rw	
E3SLa30	**-M39**	30/30/30	LB	45	44	1 x 13mm EPB BraceSmart®/NoiseSmart® one side 2 x 13mm EPB BraceSmart®/NoiseSmart® other side

Framing

Any steel frame designed to meet structural criteria for strength and serviceability under dead and live loads.
Stud width shall be 35mm minimum.
Stud spacing's at 600 centres maximum.
Frame heights as determined by specific design.

Wall Sound Absorber

Install Sound Absorber between studs of the frame.
Use 75mm thick R1.8 glass wool blanket.

Plasterboard Lining

NB: The installer must look for the Product Identification Code on the face paper to ensure the correct board type is installed. Refer to the Face Paper Product Identification Code table on this page.

One layer of 13mm EPB BraceSmart®/NoiseSmart® lining on one side and Two layers of 13mm EPB BraceSmart®/NoiseSmart® on the other side of the steel framing.

Vertical fixing only permitted. Use full height sheets where possible. Inner layer joints on opposite side of frame should be offset. All sheet joints must be fixed over steel framing. Vertical joints of the outer layer should be offset by 600mm to those of the inner layer. Sheet end butt joints must be formed over nogs and offset the outer layer joints from the inner layer. The inner layers are fixed hard to the floor. Sheets shall be touch fitted.

Fixing of Linings (Non Fire Rated)

Fix the linings as per the EPB® Plasterboard Installation Guide. If an FRR is required then follow the Fixing of Linings instruction in the following paragraph.

Fixing of Linings (to achieve Fire Rating)

Fasteners

System Number	Side One		Side Two
	1st Layer	2nd Layer	Single Layer
	Self-Tapping Drywall Screws		
E3SLa30-M39	13mm	13mm	13mm
	25 x 6g	41 x 6g	25 x 6g

Fastener Centres

Fix at 300mm centres up each stud with no fixing to top and bottom channel sections.

Place fasteners no closer than 12mm to the sheet edge and 50mm from sheet ends.

Place fasteners at 200mm centres where sheet end butt joints occur.

Avoid outer layer screws from hitting inner layer screws.

Acoustic Sealant

A bead of acoustic sealant is required around the perimeter of the framing and the single layer is bedded into the bead. The perimeter junctions of the wall must be airtight.

Jointing

All fastener heads stopped and all sheet joints reinforced with paper jointing tape and stopped. Wall to ceiling junctions are to be reinforced with paper tape and square stopped or finished with Cornice. All in accordance with EPB® Plasterboard Installation Guide.

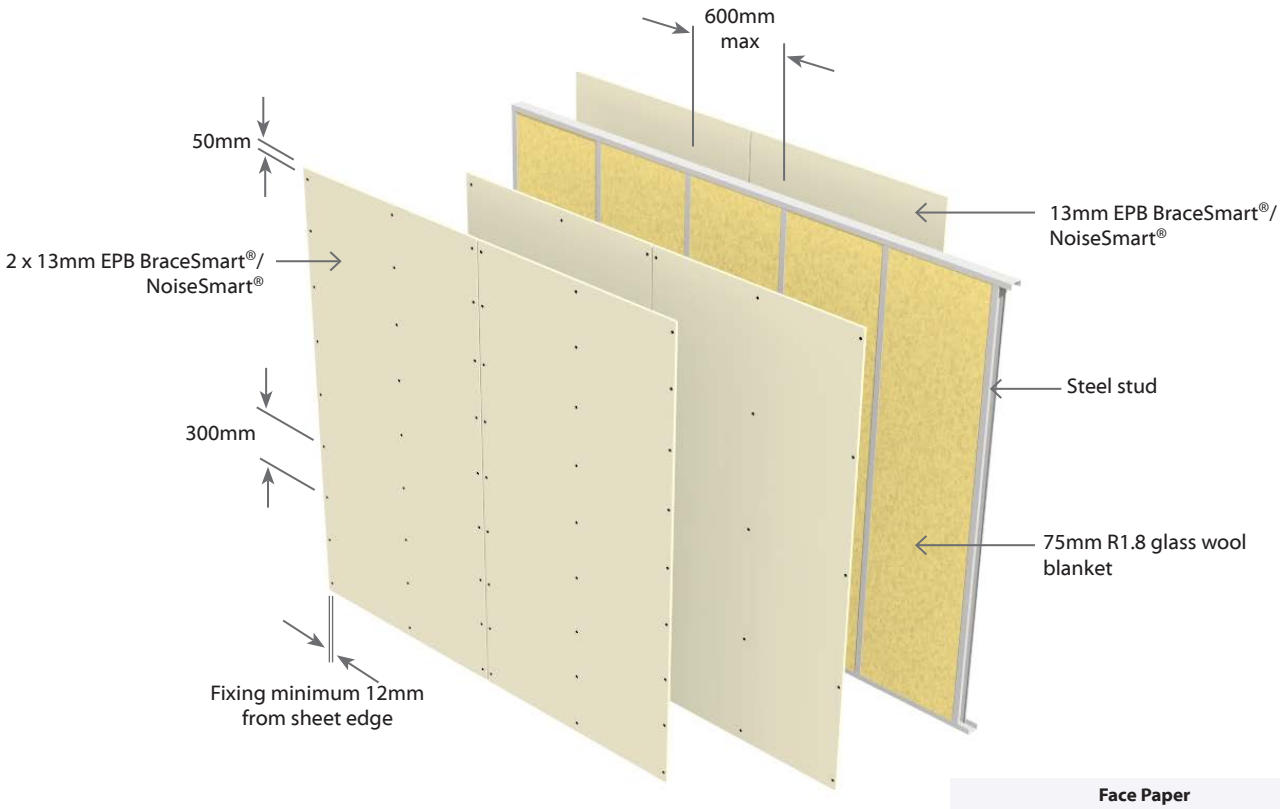

Face Paper Product Identification Code	
13mm EPB BraceSmart®/NoiseSmart®	**M13**

E4SLa30 Single Steel Frame | Load Bearing | Two Way FRR

4 Layers: 2 Layers of Plasterboard to each side of frame | Sub Intertenancy acoustic

System Number	Lining Suffix	FRR	Load Bearing Ability	Noise Control		Lining Requirement
				STC	Rw	
E4SLa30	**-S40**	30/30/30	LB	45	44	2 x 10mm EPB® Standard each side

Framing
Any steel frame designed to meet structural criteria for strength and serviceability under dead and live loads.
Stud width shall be 35mm minimum.
Stud spacing's at 600 centres maximum.
Frame heights as determined by specific design.

Wall Sound Absorber
Install Sound Absorber between studs of the frame.
Use 75mm thick R1.8 glass wool blanket.

Plasterboard Lining
NB: The installer must look for the Product Identification Code on the face paper to ensure the correct board type is installed. Refer to the Face Paper Product Identification Code table on this page.

Two layers of 10mm EPB® Standard to each side of the steel framing.

Vertical fixing only permitted. Use full height sheets where possible. Inner layer joints on opposite side of frame should be offset. All sheet joints must be fixed over steel framing. Vertical joints of the outer layer should be offset by 600mm to those of the inner layer. Sheet end butt joints must be formed over nogs and offset the outer layer joints from the inner layer. The inner layers are fixed hard to the floor. Sheets shall be touch fitted.

Fixing of Linings (Non Fire Rated)
Fix the linings as per the EPB® Plasterboard Installation Guide. If an FRR is required then follow the Fixing of Linings instruction in the following paragraph.

Fixing of Linings (to achieve Fire Rating)
Fasteners

System Number	Side One		Side Two	
	1st Layer	2nd Layer	1st Layer	2nd Layer
	Self-Tapping Drywall Screws			
E4SLa30-S40	10mm	10mm	10mm	10mm
	25 x 6g	32 x 6g	25 x 6g	32 x 6g

Fastener Centres
Inner Layer: Fix at 600mm centres up each stud with no fixing to top or bottom channel sections.
Outer Layer: Fix at 300mm centres up each stud with no fixing to top and bottom channel sections.
Place fasteners no closer than 12mm to the sheet edge and 50mm from sheet ends.
Place fasteners at 200mm centres where sheet end butt joints occur.
Avoid outer layer screws from hitting inner layer screws.

Acoustic Sealant
A bead of acoustic sealant is required around the perimeter of the framing and the single layer is bedded into the bead. The perimeter junctions of the wall must be airtight.

Jointing
Inner Layer: Unstopped
Outer Layer: All fastener heads stopped and all sheet joints reinforced with paper jointing tape and stopped. Wall to ceiling junctions are to be reinforced with paper tape and square stopped or finished with Cornice. All in accordance with EPB® Plasterboard Installation Guide.

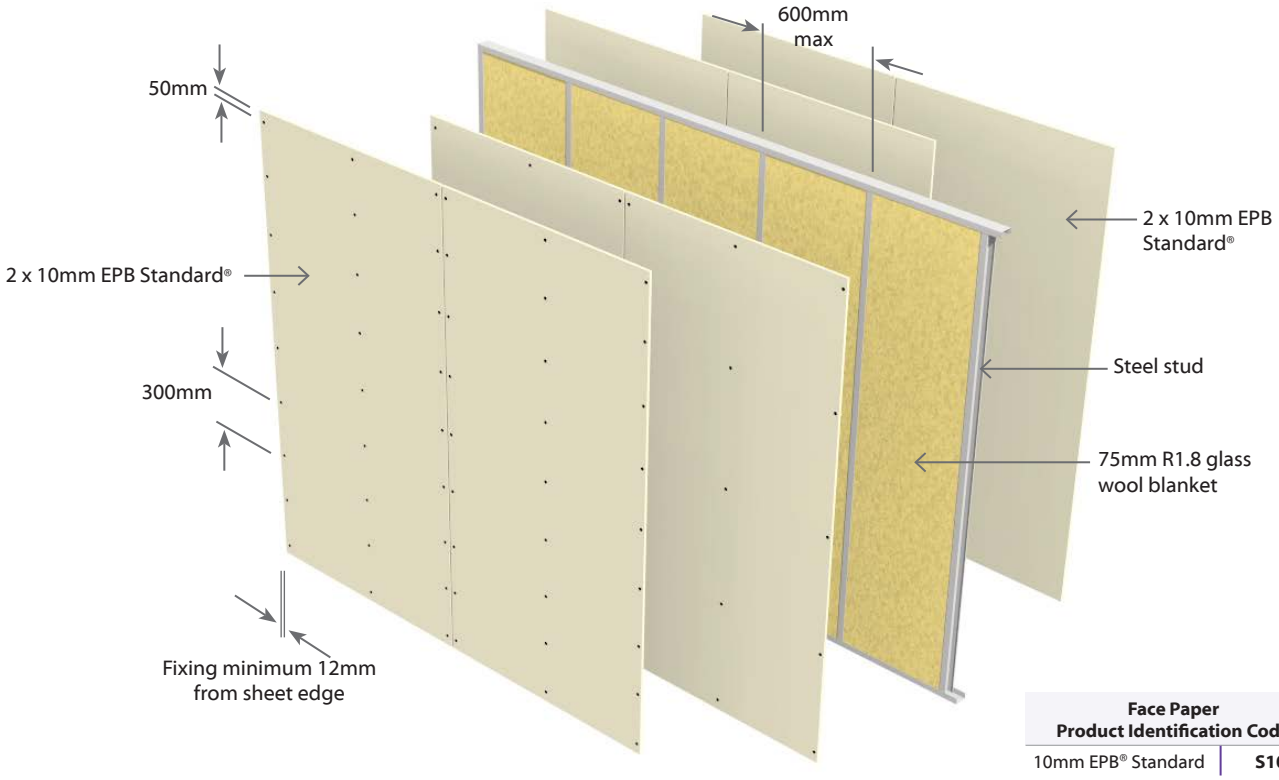

Face Paper Product Identification Code	
10mm EPB® Standard	**S10**

E4SLa45 Single Steel Frame | Load Bearing | Two Way FRR

4 Layers: 2 Layers of Plasterboard to each side of frame | Sub Intertenancy **a**coustic

System Number	Lining Suffix	FRR	Load Bearing Ability	Noise Control		Lining Requirement
				STC	Rw	
E4SLa45	**-S52**	45/45/45	LB	48	47	2 x 13mm EPB® Standard each side
	-M40	45/45/45	LB	48	47	2 x 10mm EPB BraceSmart®/NoiseSmart® each side

Framing

Any steel frame designed to meet structural criteria for strength and serviceability under dead and live loads.
Stud width shall be 35mm minimum.
Stud spacing's at 600 centres maximum.
Frame heights as determined by specific design.

Wall Sound Absorber

Install Sound Absorber between studs of the frame.
Use 75mm thick R1.8 glass wool blanket.

Plasterboard Lining

NB: The installer must look for the Product Identification Code on the face paper to ensure the correct board type is installed. Refer to the Face Paper Product Identification Code table on this page.

Two layers of EPB® Plasterboard to one side and Two layers to the Other side as per specified system above.

Vertical fixing only permitted. Use full height sheets where possible. Inner layer joints on opposite side of frame should be offset. All sheet joints must be fixed over steel framing. Vertical joints of the outer layer should be offset by 600mm to those of the inner layer. Sheet end butt joints must be formed over nogs and offset the outer layer joints from the inner layer. The inner layers are fixed hard to the floor. Sheets shall be touch fitted.

Fixing of Linings (Non Fire Rated)

Fix the linings as per the EPB® Plasterboard Installation Guide. If an FRR is required then follow the Fixing of Linings instruction in the following paragraph.

Fixing of Linings (to achieve Fire Rating)

Fasteners (As per Specified System Above)

System Number	Side One		Side Two	
	1st Layer	2nd Layer	1st Layer	2nd Layer
	Self-Tapping Drywall Screws			
E4SLa45-S52	13mm	13mm	13mm	13mm
	25 x 6g	41 x 6g	25 x 6g	41 x 6g
E4SLa45-M40	10mm	10mm	10mm	10mm
	25 x 6g	32 x 6g	25 x 6g	32 x 6g

Fastener Centres

Inner Layer: Fix at 600mm centres up each stud with no fixing to top or bottom channel sections.

Outer Layer: Fix at 300mm centres up each stud with no fixing to top and bottom channel sections.

Place fasteners no closer than 12mm to the sheet edge and 50mm from sheet ends.

Place fasteners at 200mm centres where sheet end butt joints occur.

Avoid outer layer screws from hitting inner layer screws.

Acoustic Sealant

A bead of acoustic sealant is required around the perimeter of the framing and the single layer is bedded into the bead. The perimeter junctions of the wall must be airtight.

Jointing

Inner Layer: Unstopped

Outer Layer: All fastener heads stopped and all sheet joints reinforced with paper jointing tape and stopped. Wall to ceiling junctions are to be reinforced with paper tape and square stopped or finished with Cornice. All in accordance with EPB® Plasterboard Installation Guide.

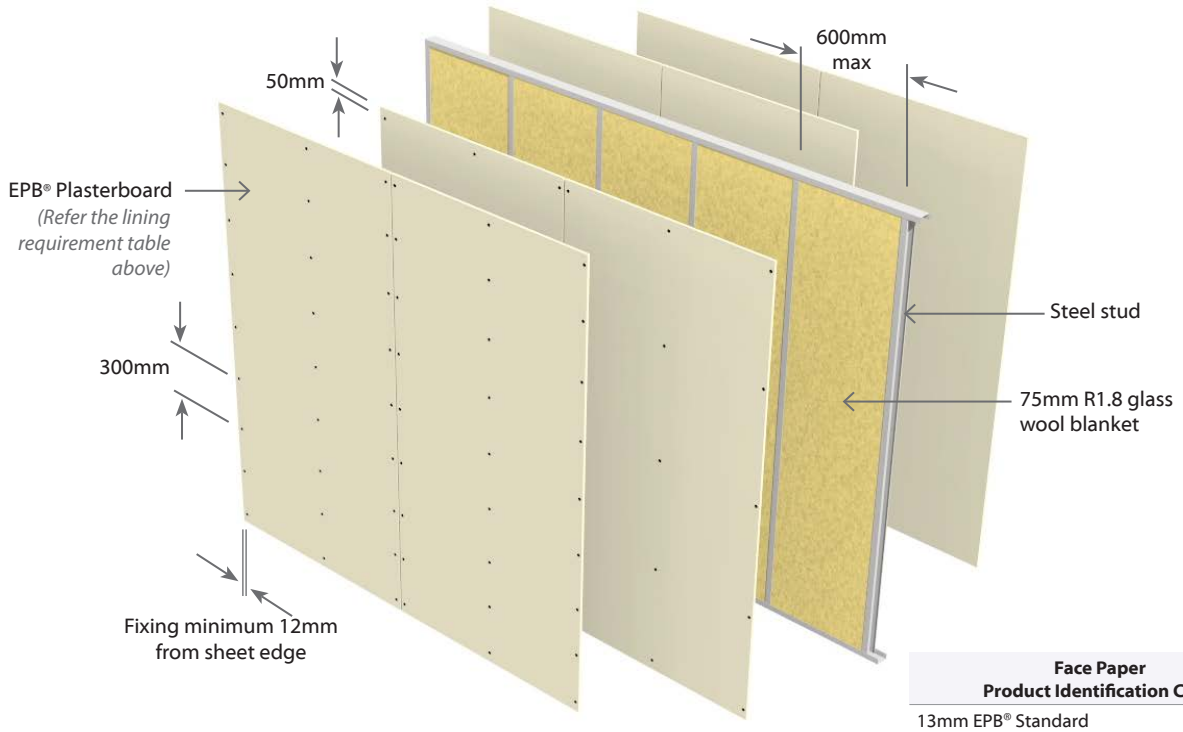

Face Paper Product Identification Code	
13mm EPB® Standard	**S13**
10mm EPB BraceSmart®/NoiseSmart®	**M10**

E4SLa60 | Single Steel Frame | Load Bearing | Two Way FRR

4 Layers: 2 Layers of Plasterboard to each side of frame | Sub Intertenancy acoustic

System Number	Lining Suffix	FRR	Load Bearing Ability	Noise Control		Lining Requirement
				STC	Rw	
E4SLa60	**-M52**	60/60/60	LB	52	51	2 x 13mm EPB BraceSmart®/NoiseSmart® each side

Framing
Any steel frame designed to meet structural criteria for strength and serviceability under dead and live loads.
Stud width shall be 35mm minimum.
Stud spacing's at 600 centres maximum.
Frame heights as determined by specific design.

Wall Sound Absorber
Install Sound Absorber between studs of the frame.
Use 75mm thick R1.8 glass wool blanket.

Plasterboard Lining
NB: The installer must look for the Product Identification Code on the face paper to ensure the correct board type is installed. Refer to the Face Paper Product Identification Code table on this page.

Two layers of 13mm EPB BraceSmart®/NoiseSmart® linings fixed to each side of the steel framing.

Vertical fixing only permitted. Use full height sheets where possible. Inner layer joints on opposite side of frame should be offset. All sheet joints must be fixed over steel framing. Vertical joints of the outer layer should be offset by 600mm to those of the inner layer. Sheet end butt joints must be formed over nogs and offset the outer layer joints from the inner layer. The inner layers are fixed hard to the floor. Sheets shall be touch fitted.

Fixing of Linings (Non Fire Rated)
Fix the linings as per the EPB® Plasterboard Installation Guide. If an FRR is required then follow the Fixing of Linings instruction in the following paragraph.

Fixing of Linings (to achieve Fire Rating)
Fasteners

System Number	Side One		Side Two	
	1st Layer	2nd Layer	1st Layer	2nd Layer
	Self-Tapping Drywall Screws			
E4SLa60-M52	13mm	13mm	13mm	13mm
	25 x 6g	41 x 6g	25 x 6g	41 x 6g

Fastener Centres
Inner Layer: Fix at 600mm centres up each stud with no fixing to top or bottom channel sections.
Outer Layer: Fix at 300mm centres up each stud with no fixing to top and bottom channel sections.
Place fasteners no closer than 12mm to the sheet edge and 50mm from sheet ends.
Place fasteners at 200mm centres where sheet end butt joints occur.
Avoid outer layer screws from hitting inner layer screws.

Acoustic Sealant
A bead of acoustic sealant is required around the perimeter of the framing and the single layer is bedded into the bead. The perimeter junctions of the wall must be airtight.

Jointing
Inner Layer: Unstopped
Outer Layer: All fastener heads stopped and all sheet joints reinforced with paper jointing tape and stopped. Wall to ceiling junctions are to be reinforced with paper tape and square stopped or finished with Cornice. All in accordance with EPB® Plasterboard Installation Guide.

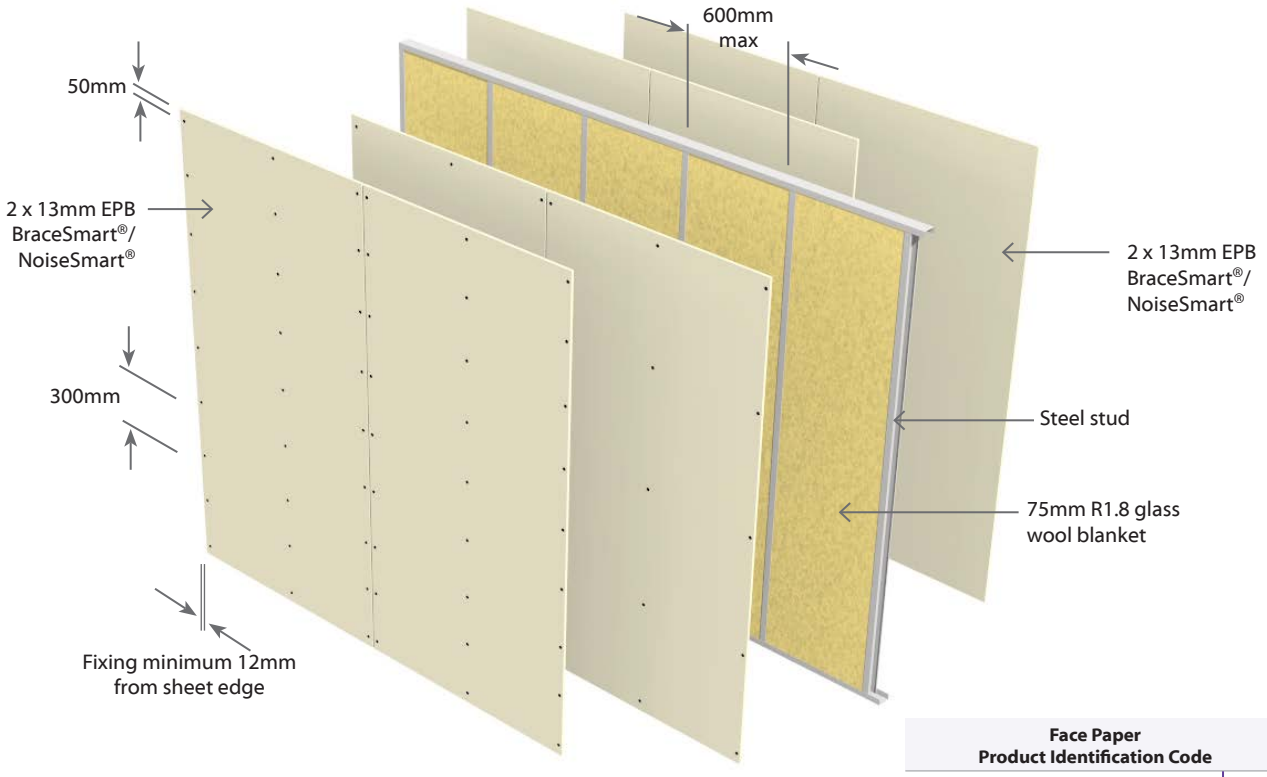

Face Paper Product Identification Code	
13mm EPB BraceSmart®/NoiseSmart®	**M13**

E4SLa90 | Single **S**teel Frame | **L**oad Bearing | Two Way FRR

4 Layers: 2 Layers of Plasterboard to each side of frame | Sub Intertenancy **a**coustic

System Number	Lining Suffix	FRR	Load Bearing Ability	Noise Control		Lining Requirement
				STC	Rw	
E4SLa90	**-F64**	90/90/90	LB	53	52	2 x 16mm EPB FireSmart® each side

Framing

Any steel frame designed to meet structural criteria for strength and serviceability under dead and live loads.
Stud width shall be 35mm minimum.
Stud spacing's at 600 centres maximum.
Frame heights as determined by specific design.

Wall Sound Absorber

Install Sound Absorber between studs of the frame.
Use 75mm thick R1.8 glass wool blanket.

Plasterboard Lining

NB: The installer must look for the Product Identification Code on the face paper to ensure the correct board type is installed. Refer to the Face Paper Product Identification Code table on this page.

Two layers of 16mm EPB FireSmart® linings fixed to each side of the steel framing.

Vertical fixing only permitted. Use full height sheets where possible. Inner layer joints on opposite side of frame should be offset. All sheet joints must be fixed over steel framing. Vertical joints of the outer layer should be offset by 600mm to those of the inner layer. Sheet end butt joints must be formed over nogs and offset the outer layer joints from the inner layer. The inner layers are fixed hard to the floor. Sheets shall be touch fitted.

Fixing of Linings (Non Fire Rated)

Fix the linings as per the EPB® Plasterboard Installation Guide. If an FRR is required then follow the Fixing of Linings instruction in the following paragraph.

Fixing of Linings (to achieve Fire Rating)

Fasteners

System Number	Side One		Side Two	
	1st Layer	2nd Layer	1st Layer	2nd Layer
	Self-Tapping Drywall Screws			
E4SLa90-F64	16mm	16mm	16mm	16mm
	32 x 6g	51 x 7g	32 x 6g	51 x 7g

Fastener Centres

Inner Layer: Fix at 600mm centres up each stud with no fixing to top or bottom channel sections.

Outer Layer: Fix at 300mm centres up each stud with no fixing to top and bottom channel sections.

Place fasteners no closer than 12mm to the sheet edge and 50mm from sheet ends.

Place fasteners at 200mm centres where sheet end butt joints occur.

Avoid outer layer screws from hitting inner layer screws.

Acoustic Sealant

A bead of acoustic sealant is required around the perimeter of the framing and the single layer is bedded into the bead. The perimeter junctions of the wall must be airtight.

Jointing

Inner Layer: Unstopped

Outer Layer: All fastener heads stopped and all sheet joints reinforced with paper jointing tape and stopped. Wall to ceiling junctions are to be reinforced with paper tape and square stopped or finished with Cornice. All in accordance with EPB® Plasterboard Installation Guide.

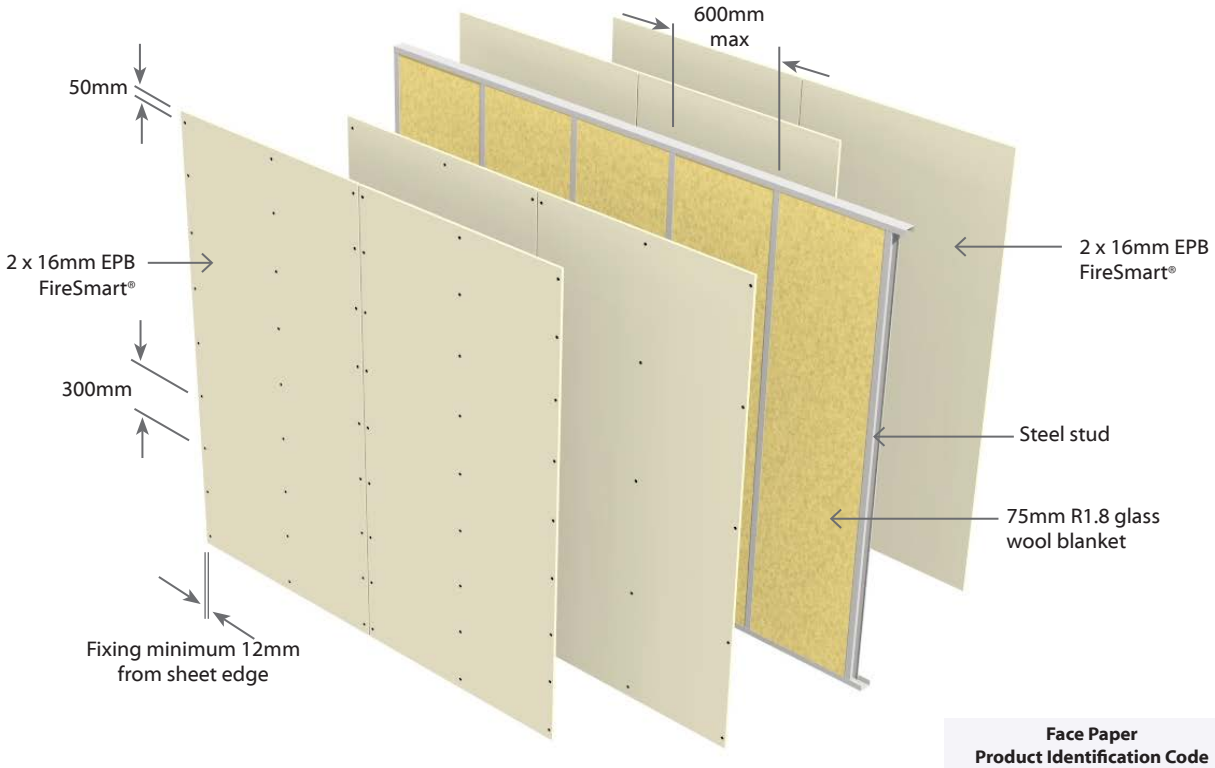

Face Paper Product Identification Code	
16mm EPB FireSmart®	**F16**

E2SDa30 — Double Steel Frame — Non Load Bearing — Two Way FRR

2 Layers: 1 Layer of Plasterboard to each side of frame — Sub Intertenancy **a**coustic

System Number	Lining Suffix	FRR	Load Bearing Ability	Noise Control		Lining Requirement
				STC	Rw	
E2SDa30	**-S26**	-/30/30	NLB	52	51	1 x 13mm EPB® Standard each side
	-M20	-/30/30	NLB	52	51	1 x 10mm EPB BraceSmart®/NoiseSmart® each side

Framing

Double Frame - Steel studs to be of minimum dimension 64mm x 34mm x 0.55 BMT with a 6mm return.
Tracks to be minimum dimension 64mm x 30mm x 0.55 BMT.
Top & bottom tracks are fixed to the floor and ceiling in true alignment.
Studs are placed at 600mm centres maximum. Studs aligned.
Place studs to allow the nominated expansion gap (minimum 15mm) at the top of frame. The studs are not directly fixed to the tracks. The studs are held in place by the grip of the track runners.

Wall Heights

Recommended maximum height is 2.7m. Higher walls may be subject to specific engineering design or consult the framing manufacturer.

Minimum Partition Width

Space between Frames shall be a minimum of 25mm in order to achieve the STC ratings in the table above the partition width (excluding the board) shall be a minimum of 153mm. Increasing the partition width would increase STC performance as per the table below.

Stud Size	Spaces Between Frames	Partition Width (Excludes Board)	STC Rating
64mm	25mm Min	153mm	+0
64mm	77mm Min	205mm	+2

Wall Sound Absorber

Install Sound Absorber between studs on one side of the double frame. Use 75mm thick R1.8 glass wool blanket.

Plasterboard Lining

NB: The installer must look for the Product Identification Code on the face paper to ensure the correct board type is installed. Refer to the Face Paper Product Identification Code table on this page.

One layer of EPB® Plasterboard lining as per specified system above on each side of the double steel framing.

Vertical fixing only permitted. Use full height or full length sheets where possible. Sheet edge and butt joints on opposite side of frame should be offset. All sheet joints must be fixed over steel framing. Sheet end butt joints must be formed over nogs. Sheets are fixed hard to the floor. Sheets shall be touch fitted.

Fixing of Linings (Non Fire Rated)

Fix the linings as per the EPB® Plasterboard Installation Guide. If an FRR is required then follow the Fixing of Linings instruction in the following paragraph.

Fixing of Linings (to achieve Fire Rating)

Fasteners (As per Specified System Above)

System Number	Side One	Side Two
	Single	
	Self-Tapping Drywall Screws	
E2SDa30-M20	10mm	10mm
	25 x 6g	25 x 6g
E2SDa30-S26	13mm	13mm
	25 x 6g	25 x 6g

Fastener Centres

Fix at 300mm centres up each stud with no fixing to top and bottom channel sections. Place fasteners no closer than 12mm to the sheet edge and 50mm from sheet ends. Place fasteners at 200mm centres where sheet end butt joints occur. Avoid outer layer screws from hitting inner layer screws.

Acoustic Sealant

A bead of acoustic sealant is required around the perimeter of the framing and the single layer is bedded into the bead. The perimeter junctions of the wall must be airtight.

Jointing

All fastener heads stopped and all sheet joints reinforced with paper jointing tape and stopped. Wall to ceiling junctions are to be reinforced with paper tape and square stopped or finished with Cornice. All in accordance with EPB® Plasterboard Installation Guide.

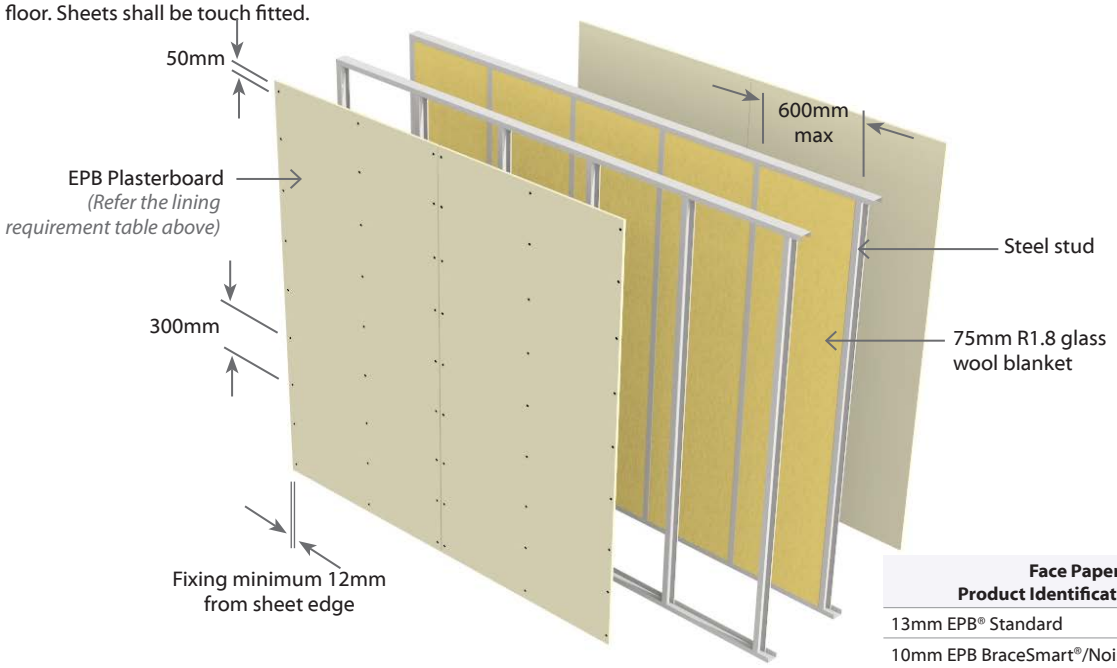

Face Paper Product Identification Code	
13mm EPB® Standard	**S13**
10mm EPB BraceSmart®/NoiseSmart®	**M10**

E3SRa30	**S**teel Frame with Resilient **R**ail	Non Load Bearing	Two Way FRR
3 Layers:	1 Layer of Plasterboard to Framing side& 2 Layers of Plasterboard to Rail side		Sub Intertenancy **a**coustic

System Number	Lining Suffix	FRR	Load Bearing Ability	Noise Control		Lining Requirement
				STC	Rw	
E3SRa30	**-S39**	-/30/30	NLB	51	50	Framing Side: 1 x 13mm EPB® Standard Rail Side: 2 x 13mm EPB® Standard
	-M30	-/30/30	NLB	51	50	Framing Side: 1 x 10mm EPB BraceSmart®/NoiseSmart® Rail Side: 2 x 10mm EPB BraceSmart®/NoiseSmart®

Framing

Steel studs with minimum dimensions 64mm x 34mm x 0.55 BMT with 6mm return. Tracks to be minimum size 64mm x 30mm x 0.55 BMT and are fixed to floor and ceiling in true alignment. Studs are placed at 600mm centres maximum. Studs are placed with a 15mm expansion gap at top of frame. The studs are not directly fixed to the tracks. The studs are held in place by the grip of the channel runners. No other fixing is to be used.

Wall Heights

Recommended maximum height is 2.7m. Higher walls may be subject to specific engineering design or consult the framing manufacturer.

Partition Width

In order to achieve the STC ratings in the table above the partition width (excluding the board) shall be a minimum of 77mm.

Stud Depth	Rail	Lining Suffix	Plasterboard	Total Partition
64mm	13mm	M30	30mm	107mm
		S39	39mm	116mm

Wall Sound Absorber

Install Sound Absorber between studs of the frame.
Use 75mm thick R1.8 glass wool blanket.

Acoustic Resilient Rail

The resilient rail shall be fixed to the studs at 600mm centres using 32mm x 8g wafer head self tapping screws through the base flange and into each stud. The base flange to face downwards and resilient edge upwards. Channel may be joined by nesting together with no more than 20mm overlap. Fasten through both channels into stud. Highest resilient channel shall be fixed no more than 75mm from the ceiling line and the lowest channel, 50mm from the floor line.

Plasterboard Lining

NB: The installer must look for the Product Identification Code on the face paper to ensure the correct board type is installed. Refer to the Face Paper Product Identification Code table on this page.

Framing Side: One layer of EPB® Plasterboard lining fixed vertically. All sheet joints must be fixed over steel framing.

Resilient Rail Side: Two layers fixed vertically on the furring channel. Vertical joints of outer layer should be offset by 600mm from those of the inner layer. Use full height sheets where possible. The inner layers are fixed hard to the floor. Sheet end butt joints must be formed over nogs or rails and offset the outer layer joints from the inner layer. Sheets shall be touch fitted.

Fixing of Linings (Non Fire Rated)

Fix the linings as per the EPB® Plasterboard Installation Guide. If an FRR is required then follow the Fixing of Linings instruction in the following paragraph.

Fixing of Linings (to achieve Fire Rating)

Fasteners (As per Specified System Above)

System Number	Resilient Rail Side		Framing Side
	1st Layer	2nd Layer	Single Layer
	Self-Tapping Drywall Screws		
E3SRa30-M30	10mm	10mm	10mm
	25 x 6g	32 x 6g	25 x 6g
E3SRa30-S39	13mm	13mm	13mm
	25 x 6g	32 x 6g	25 x 6g

Fastener Centres

Framing Side: Fix at 300mm centres up each stud with no fixing to top or bottom channel sections.

Place fasteners no closer than 12mm to the sheet edge and 50mm from sheet ends.

Resilient Rail Side: Fix 300mm centres on all furring channels on other side.

Place fasteners minimum 12mm from sheet edges and sheet ends. Place fasteners at 200mm centres where sheet end butt joints occur. Avoid outer layer screws from hitting inner layer screws.

Acoustic Sealant

A bead of acoustic sealant must be placed on the perimeter of the framing or the inner layer. The single or outer layer is then bedded onto the bead. The perimeter junctions of the wall must be airtight.

Jointing

Inner Layer: Unstopped

Outer or Single Layer: All fastener heads stopped and all sheet joints reinforced with paper jointing tape and stopped. Wall to ceiling junctions are to be reinforced with paper tape and square stopped or finished with Cornice. All in accordance with EPB® Plasterboard Installation Guide.

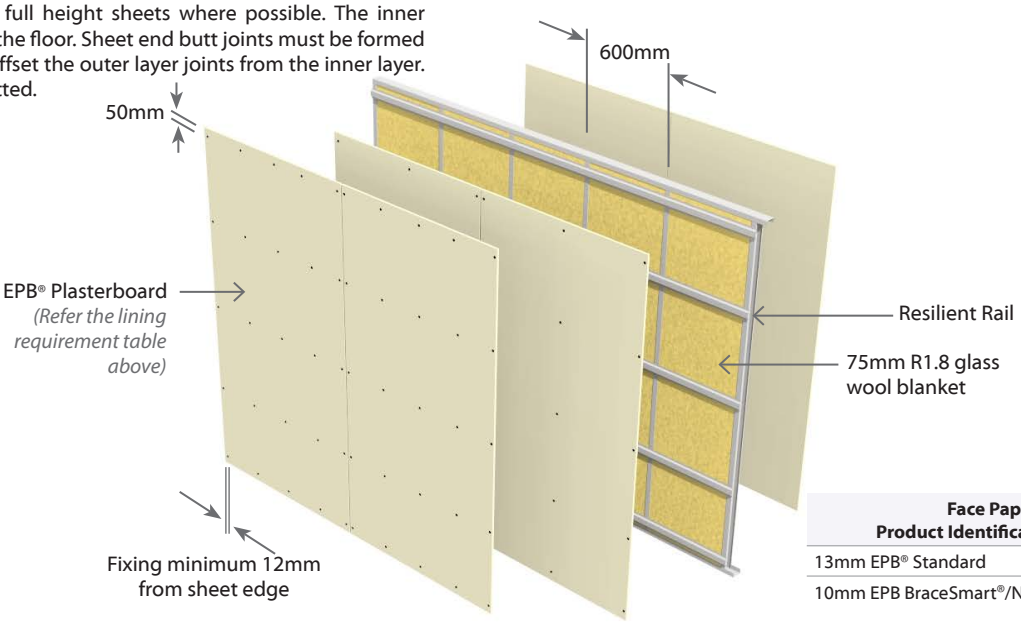

Face Paper Product Identification Code	
13mm EPB® Standard	**S13**
10mm EPB BraceSmart®/NoiseSmart®	**M10**

E3SRa60	**S**teel Frame with Resilient **R**ail	Non Load Bearing	Two Way FRR
3 Layers:	1 Layer of Plasterboard to Framing side & 2 Layers of Plasterboard to Rail side		Sub Intertenancy **a**coustic

System Number	Lining Suffix	FRR	Load Bearing Ability	Noise Control		Lining Requirement
				STC	Rw	
E3SRa60	**-MS39**	-/60/60	NLB	52	51	Framing Side: 1 x 13mm EPB BraceSmart®/NoiseSmart® Rail Side: 2 x 13mm EPB® Standard
	-M39	-/60/60	NLB	53	52	Framing Side: 1 x 13mm EPB BraceSmart®/NoiseSmart® Rail Side: 2 x 13mm EPB BraceSmart®/NoiseSmart®

Framing

Steel studs with minimum dimensions 64mm x 34mm x 0.55 BMT with 6mm return. Tracks to be minimum size 64mm x 30mm x 0.55 BMT and are fixed to floor and ceiling in true alignment. Studs are placed at 600mm centres maximum. Studs are placed with a 15mm expansion gap at top of frame. The studs are not directly fixed to the tracks. The studs are held in place by the grip of the channel runners. No other fixing is to be used.

Wall Heights

Recommended maximum height is 2.7m. Higher walls may be subject to specific engineering design or consult the framing manufacturer.

Partition Width

In order to achieve the STC ratings in the table above the partition width (excluding the board) shall be a minimum of 77mm.

Stud Depth	Rail	Lining Suffix	Plasterboard	Total Partition
64mm	13mm	MS30	39mm	116mm
		M39		

Wall Sound Absorber

Install Sound Absorber between studs of the frame.

Use 75mm thick R1.8 glass wool blanket.

Acoustic Resilient Rail

The resilient Rail shall be fixed to the studs at 600mm centres using 32mm x 8g wafer head self tapping screws through the base flange and into each stud. The base flange to face downwards and resilient edge upwards. Channel may be joined by nesting together with no more than 20mm overlap. Fasten through both channels into stud. Highest resilient channel shall be fixed no more than 75mm from the ceiling line and the lowest channel, 50mm from the floor line.

Plasterboard Lining

NB: The installer must look for the Product Identification Code on the face paper to ensure the correct board type is installed. Refer to the Face Paper Product Identification Code table on this page.

Framing Side: One layer of EPB® Plasterboard lining fixed vertically. All sheet joints must be fixed over steel framing.

Resilient Rail Side: Two layers fixed vertically on the furring channel. Vertical joints of outer layer should be offset by 600mm from those of the inner layer. Use full height sheets where possible. The inner layers are fixed hard to the floor.

Sheet end butt joints must be formed over nogs or rails and offset the outer layer joints from the inner layer. Sheets shall be touch fitted.

Fixing of Linings (Non Fire Rated)

Fix the linings as per the EPB® Plasterboard Installation Guide. If an FRR is required then follow the Fixing of Linings instruction in the following paragraph.

Fixing of Linings (to achieve Fire Rating)

Fasteners

System Number	Resilient Rail Side		Framing Side
	1st Layer	2nd Layer	Single Layer
	Self-Tapping Drywall Screws		
E3SRa60-MS39 **E3SRa60-M39**	13mm 25 x 6g	13mm 41 x 6g	13mm 25 x 6g

Fastener Centres

Framing Side: Fix at 300mm centres up each stud with no fixing to top or bottom channel sections. Place fasteners no closer than 12mm to the sheet edge and 50mm from sheet ends.

Resilient Rail Side: Fix 300mm centres on all furring channels on other side.

Place fasteners minimum 12mm from sheet edges and sheet ends.

Place fasteners at 200mm centres where sheet end butt joints occur.

Avoid outer layer screws from hitting inner layer screws.

Acoustic Sealant

A bead of acoustic sealant must be placed on the perimeter of the framing or the inner layer. The single or outer layer is then bedded onto the bead. The perimeter junctions of the wall must be airtight.

Jointing

Inner Layer: Unstopped

Outer or Single Layer: All fastener heads stopped and all sheet joints reinforced with paper jointing tape and stopped. Wall to ceiling junctions are to be reinforced with paper tape and square stopped or finished with Cornice. All in accordance with EPB® Plasterboard Installation Guide.

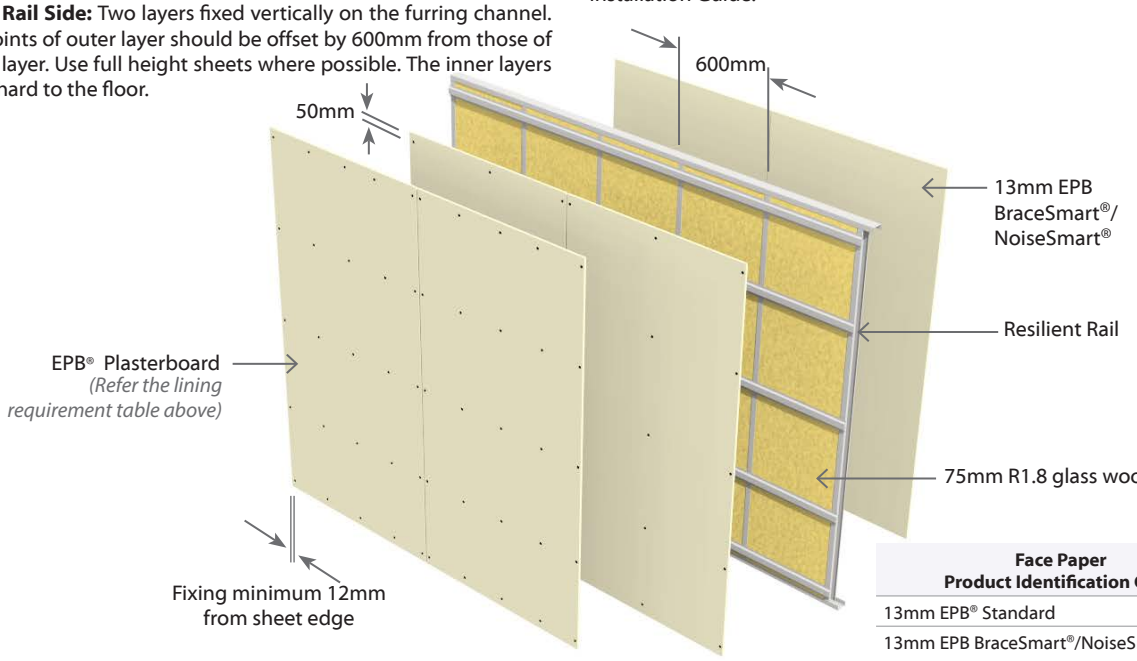

Face Paper Product Identification Code	
13mm EPB® Standard	**S13**
13mm EPB BraceSmart®/NoiseSmart®	**M13**

E2SQa30	**Q**uiet **S**teel Frame	Non Load Bearing	Two Way FRR

2 Layers: 1 Layer of Plasterboard to each side of frame | Sub Intertenancy **a**coustic

System Number	Lining Suffix	FRR	Load Bearing Ability	Noise Control		Lining Requirement
				STC	Rw	
E2SQa30	**-S26**	-/30/30	NLB	47	46	1 x 13mm EPB® Standard each side
	-M20	-/30/30	NLB	48	47	1 x 10mm EPB BraceSmart®/NoiseSmart® each side

Framing

Quiet Steel Frame – Channels to be 92mm x 30mm x 0.55 BMT and are fixed to floor and ceiling. Quiet Steel studs 92mm x 45mm x 0.55 BMT are friction fitted and placed at 600mm centres with a 15mm expansion gap at top of frame.

No fixings to the top channel allowed.

Wall Heights

Recommended maximum height is 3.6m. Higher walls may be subject to specific engineering design or consult the framing manufacturer.

Partition Width

In order to achieve the STC ratings in the table above the partition width (excluding the board) shall be a minimum of 92mm.

Stud Size	Lining Suffix	Plasterboard	Total Partition
92mm	M20	20mm	112mm
	S26	26mm	118mm

Wall Sound Absorber

Install Sound Absorber between studs of the frame.

Use 90mm thick R2.2 glass wool blanket.

Plasterboard Lining

NB: The installer must look for the Product Identification Code on the face paper to ensure the correct board type is installed. Refer to the Face Paper Product Identification Code table on this page.

One layer of EPB® Plasterboard lining as per table above on each side of the Quiet steel framing.

Vertical fixing only permitted. Use full height or full length sheets where possible. Sheet edge and butt joints on opposite side of frame should be offset. All sheet joints must be fixed over steel framing. Sheet end butt joints must be formed over nogs. Sheets are fixed hard to the floor. Sheets shall be touch fitted.

Fixing of Linings (Non Fire Rated)

Fix the linings as per the EPB® Plasterboard Installation Guide. If an FRR is required then follow the Fixing of Linings instruction in the following paragraph.

Fixing of Linings (to achieve Fire Rating)

Fasteners (As per Specified System Above)

System Number	Side One	Side Two
	Single Layer	**Single Layer**
	Self-Tapping Drywall Screws	
E2SQa30-M20	10mm	10mm
	25 x 6g	25 x 6g
E2SQa30-S26	13mm	13mm
	25 x 6g	25 x 6g

Fastener Centres

Fix at 300mm centres up each stud with no fixing to top and bottom channel sections.

Place fasteners no closer than 12mm to the sheet edge and 50mm from sheet ends.

Place fasteners at 200mm centres where sheet end butt joints occur

Acoustic Sealant

A bead of acoustic sealant is required around the perimeter of the steel framing and the single layer is bedded into the bead. The perimeter junctions of the wall must be airtight.

Jointing

All fastener heads stopped and all sheet joints reinforced with paper jointing tape and stopped. Wall to ceiling junctions are to be reinforced with paper tape and square stopped or finished with Cornice. All in accordance with EPB® Plasterboard Installation Guide.

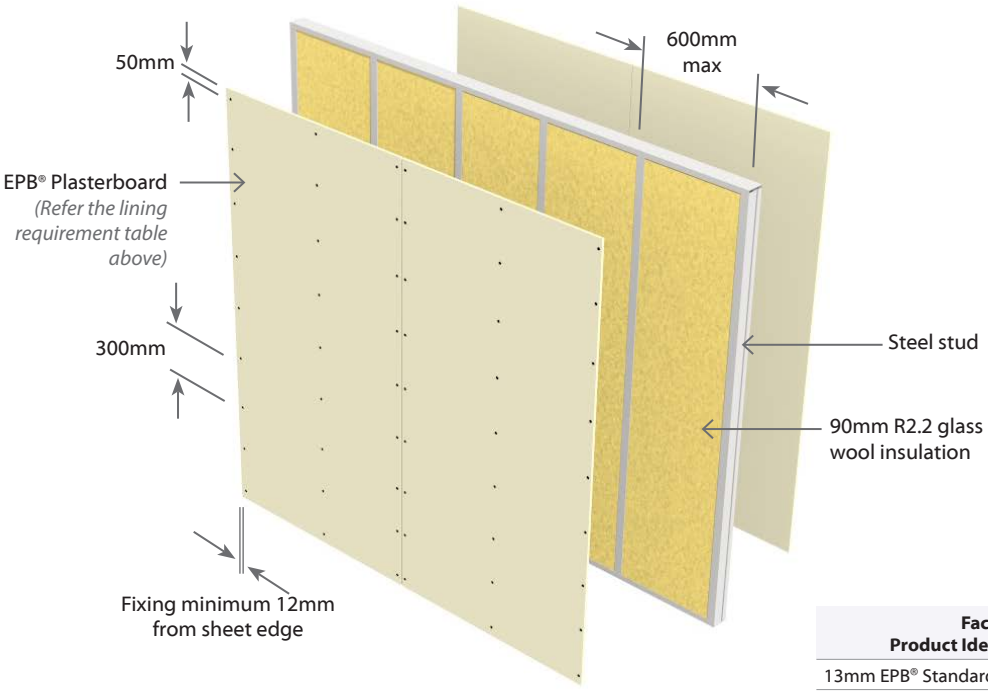

Face Paper Product Identification Code	
13mm EPB® Standard	**S13**
10mm EPB BraceSmart®/NoiseSmart®	**M10**

E3SQa30	**Q**uiet **S**teel Frame	Non Load Bearing	Two Way FRR
3 Layers:	1 Layer of Plasterboard to one side of the frame & 2 Layers of Plasterboard to other side of the frame		Sub Intertenancy **a**coustic

System Number	Lining Suffix	FRR	Load Bearing Ability	Noise Control		Lining Requirement
				STC	Rw	
E3SQa30	**-S39**	-/30/30	NLB	53	52	1 x 13mm EPB® Standard one side 2 x 13mm EPB® Standard other side
	-M30	-/30/30	NLB	53	52	1 x 10mm EPB BraceSmart®/NoiseSmart® one side 2 x 10mm EPB BraceSmart®/NoiseSmart® other side

Framing

Quiet Steel Frame – Channels to be 92mm x 30mm x 0.55 BMT and are fixed to floor and ceiling. Quiet Steel studs 92mm x 45mm x 0.55 BMT are friction fitted and placed at 600mm centres with a 15mm expansion gap at top of frame.

No fixings to the top channel allowed.

Wall Heights

Recommended maximum height is 3.6m. Higher walls may be subject to specific engineering design or consult the framing manufacturer.

Partition Width

In order to achieve the STC ratings in the table above the partition width (excluding the board) shall be a minimum of 92mm.

Stud Size	Lining Suffix	Plasterboard	Total Partition
92mm	M30	30mm	122mm
	S39	39mm	131mm

Wall Sound Absorber

Install Sound Absorber between studs of the frame.

Use 90mm thick R2.2 glass wool blanket.

Plasterboard Lining

NB: The installer must look for the Product Identification Code on the face paper to ensure the correct board type is installed. Refer to the Face Paper Product Identification Code table on this page.

One layer of EPB® Plasterboard lining on one side and Two layers on the other side as per specified system above.

Vertical fixing only permitted. Vertical joints of the outer layer should be offset by 600mm from those of the inner layer. Use full height sheets where possible. The inner layers are fixed hard to the floor. All sheet joints must be fixed over steel framing. Sheet end butt joints must be formed over nogs and offset the outer layer joints from the inner layer. Sheets shall be touch fitted.

Fixing of Linings (Non Fire Rated)

Fix the linings as per the EPB® Installation Guide. If an FRR is required then follow the Fixing of Linings instruction in the following paragraph.

Fixing of Linings (to achieve Fire Rating)

Fasteners (As per Specified System Above)

System Number	Side One		Side Two
	1st Layer	2nd Layer	Single Layer
	Self-Tapping Drywall Screws		
E3SQa30-M30	10mm	10mm	10mm
	25 x 6g	32 x 6g	25 x 6g
E3SQa30-S39	13mm	13mm	13mm
	25 x 6g	41 x 6g	25 x 6g

Fastener Centres

Inner layer: Fix at 600mm centres up all studs.

Single or Outer Layer: Fix at 300mm centres up all studs.

Place fasteners 12mm from the sheet edge and 50mm from sheet ends.

Place fasteners at 200mm centres where sheet end butt joints occur.

Avoid outer layer screws from hitting inner layer screws.

Acoustic Sealant

A bead of acoustic sealant is required around the perimeter of the steel framing and the single layer is bedded into the bead. The perimeter junctions of the wall must be airtight.

Jointing

Inner Layer: Unstopped

Outer or Single Layer: All fastener heads stopped and all sheet joints reinforced with paper jointing tape and stopped. Wall to ceiling junctions are to be reinforced with paper tape and square stopped or finished with Cornice. All in accordance with EPB® Plasterboard Installation Guide.

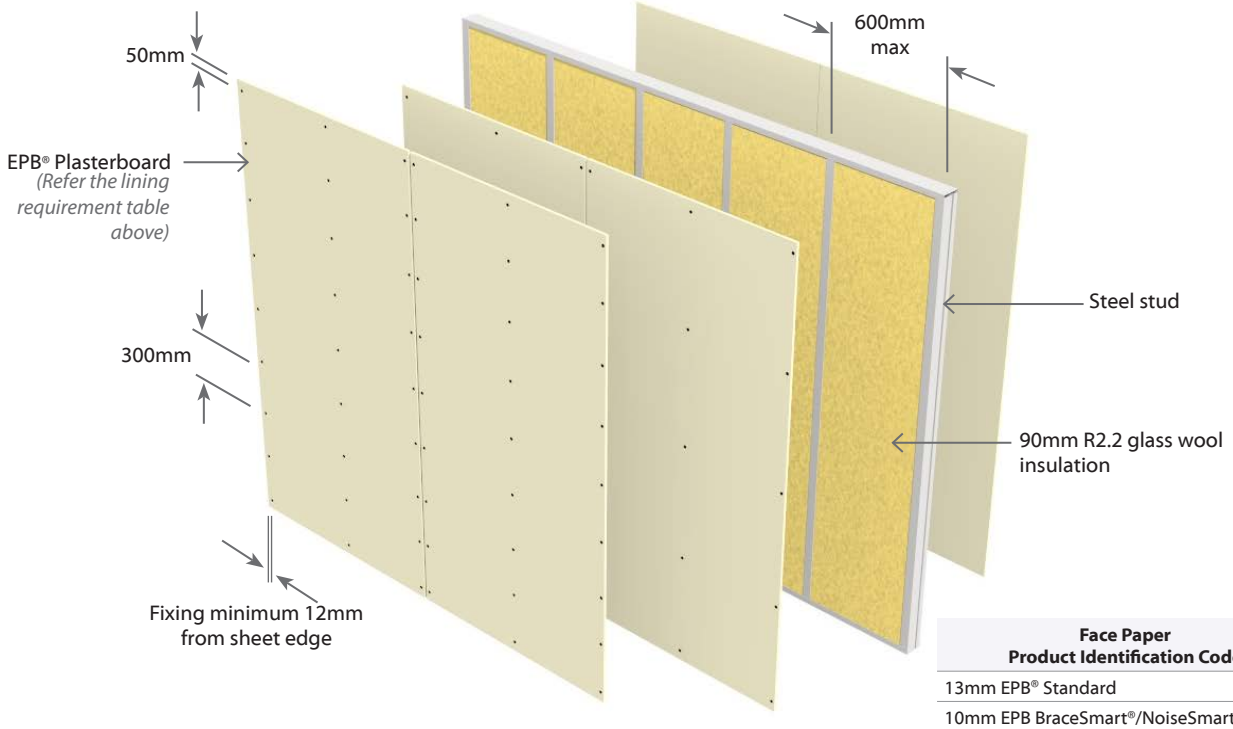

Face Paper Product Identification Code	
13mm EPB® Standard	**S13**
10mm EPB BraceSmart®/NoiseSmart®	**M10**

E3SQa45	**Q**uiet **S**teel Frame	Non Load Bearing	Two Way FRR
3 Layers:	1 Layer of Plasterboard to one side of the frame & 2 Layers of Plasterboard to other side of the frame		Sub Intertenancy **a**coustic

System Number	Lining Suffix	FRR	Load Bearing Ability	Noise Control		Lining Requirement
				STC	Rw	
E3SQa45	**-MS33**	-/45/45	NLB	52	51	1 x 13mm EPB BraceSmart®/NoiseSmart® one side 2 x 10mm EPB® Standard other side

Framing

Quiet Steel Frame – Channels to be 92mm x 30mm x 0.55 BMT and are fixed to floor and ceiling. Quiet Steel studs 92mm x 45mm x 0.55 BMT are friction fitted and placed at 600mm centres with a 15mm expansion gap at top of frame.

No fixings to the top channel allowed.

Wall Heights

Recommended maximum height is 3.6m. Higher walls may be subject to specific engineering design or consult the framing manufacturer.

Partition Width

In order to achieve the STC ratings in the table above the partition width (excluding the board) shall be a minimum of 92mm.

Stud Size	Lining Suffix	Plasterboard	Total Partition
92mm	MS33	33mm	125mm

Wall Sound Absorber

Install Sound Absorber between studs of the frame.

Use 90mm thick R2.2 glass wool blanket.

Plasterboard Lining

NB: The installer must look for the Product Identification Code on the face paper to ensure the correct board type is installed. Refer to the Face Paper Product Identification Code table on this page.

One layer of 13mm EPB BraceSmart®/NoiseSmart® lining fixed on one side and Two layers of 10mm EPB® Standard linings fixed on the other side of the quiet steel framing.

Vertical fixing only permitted. Vertical joints of the outer layer should be offset by 600mm from those of the inner layer. Use full height sheets where possible. The inner layers are fixed hard to the floor. All sheet joints must be fixed over steel framing. Sheet end butt joints must be formed over nogs and offset the outer layer joints from the inner layer. Sheets shall be touch fitted.

Fixing of Linings (Non Fire Rated)

Fix the linings as per the EPB® Plasterboard Installation Guide. If an FRR is required then follow the Fixing of Linings instruction in the following paragraph.

Fixing of Linings (to achieve Fire Rating)

Fasteners

System Number	Side One		Side Two
	1st Layer	2nd Layer	Single Layer
	Self-Tapping Drywall Screws		
E3SQa45-MS330	10mm	10mm	13mm
	25 x 6g	32 x 6g	25 x 6g

Fastener Centres

Inner layer: Fix at 600mm centres up all studs.

Single or Outer Layer: Fix at 300mm centres up all studs.

Place fasteners 12mm from the sheet edge and 50mm from sheet ends.

Place fasteners at 200mm centres where sheet end butt joints occur.

Avoid outer layer screws from hitting inner layer screws.

Acoustic Sealant

A bead of acoustic sealant is required around the perimeter of the steel framing and the single layer is bedded into the bead. The perimeter junctions of the wall must be airtight.

Jointing

Inner Layer: Unstopped

Outer or Single Layer: All fastener heads stopped and all sheet joints reinforced with paper jointing tape and stopped. Wall to ceiling junctions are to be reinforced with paper tape and square stopped or finished with Cornice. All in accordance with EPB® Plasterboard Installation Guide.

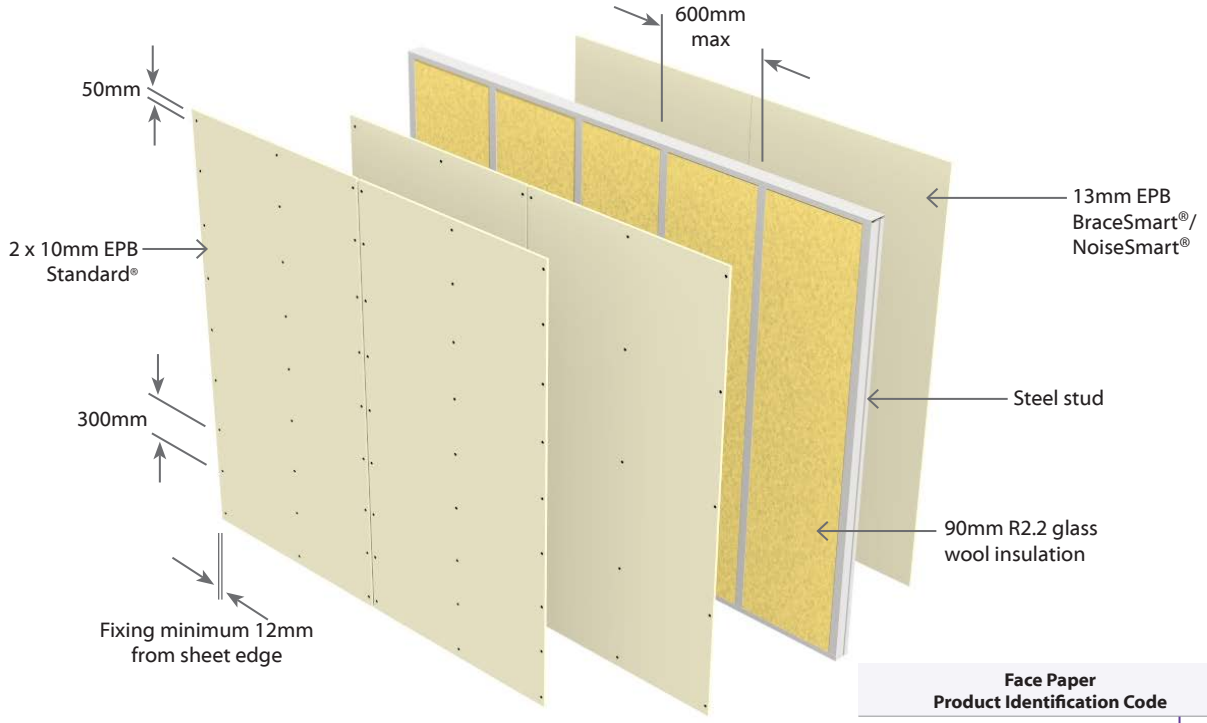

Face Paper Product Identification Code	
10mm EPB® Standard	**S10**
13mm EPB BraceSmart®/NoiseSmart®	**M13**

E2SQa60 | **Q**uiet **S**teel Frame | Non Load Bearing | Two Way FRR

2 Layers: 1 Layer of Plasterboard to each side of frame | Sub Intertenancy **a**coustic

System Number	Lining Suffix	FRR	Load Bearing Ability	Noise Control		Lining Requirement
				STC	Rw	
E2SQa60	**-M26**	-/60/60	NLB	50	49	1 x 13mm EPB BraceSmart®/NoiseSmart® each side

Framing

Quiet Steel Frame – Channels to be 92mm x 30mm x 0.55 BMT and are fixed to floor and ceiling. Quiet Steel studs 92mm x 45mm x 0.55 BMT are friction fitted and placed at 600mm centres with a 15mm expansion gap at top of frame.

No fixings to the top channel allowed.

Wall Heights

Recommended maximum height is 3.6m. Higher walls may be subject to specific engineering design or consult the framing manufacturer.

Partition Width

In order to achieve the STC ratings in the table above the partition width (excluding the board) shall be a minimum of 92mm.

Stud Size	Lining Suffix	Plasterboard	Total Partition
92mm	M26	26mm	118mm

Wall Sound Absorber

Install Sound Absorber between studs of the frame.

Use 90mm thick R2.2 glass wool blanket.

Plasterboard Lining

NB: The installer must look for the Product Identification Code on the face paper to ensure the correct board type is installed. Refer to the Face Paper Product Identification Code table on this page.

One layer of 13mm EPB BraceSmart®/NoiseSmart® lining fixed on each side of the Quiet steel framing.

Vertical fixing only permitted. Use full height sheets where possible. Sheets are fixed hard to the floor. All sheet joints must be fixed over steel framing. Sheet end butt joints must be formed over nogs. Sheets shall be touch fitted.

Fixing of Linings (Non Fire Rated)

Fix the linings as per the EPB® Plasterboard Installation Guide. If an FRR is required then follow the Fixing of Linings instruction in the following paragraph.

Fixing of Linings (to achieve Fire Rating)

Fasteners

System Number	Side One	Side Two
	Single Layer	**Single Layer**
	Self-Tapping Drywall Screws	
E2SQa60-M26	13mm	13mm
	25 x 6g	25x 6g

Fastener Centres

Fix at 300mm centres up each stud with no fixing to top and bottom channel sections.

Place fasteners no closer than 12mm to the sheet edge and 50mm from sheet ends.

Place fasteners at 200mm centres where sheet end butt joints occur.

Acoustic Sealant

A bead of acoustic sealant is required around the perimeter of the steel framing and the single layer is bedded into the bead. The perimeter junctions of the wall must be airtight.

Jointing

All fastener heads stopped and all sheet joints reinforced with paper jointing tape and stopped. Wall to ceiling junctions are to be reinforced with paper tape and square stopped or finished with Cornice. All in accordance with EPB® Plasterboard Installation Guide.

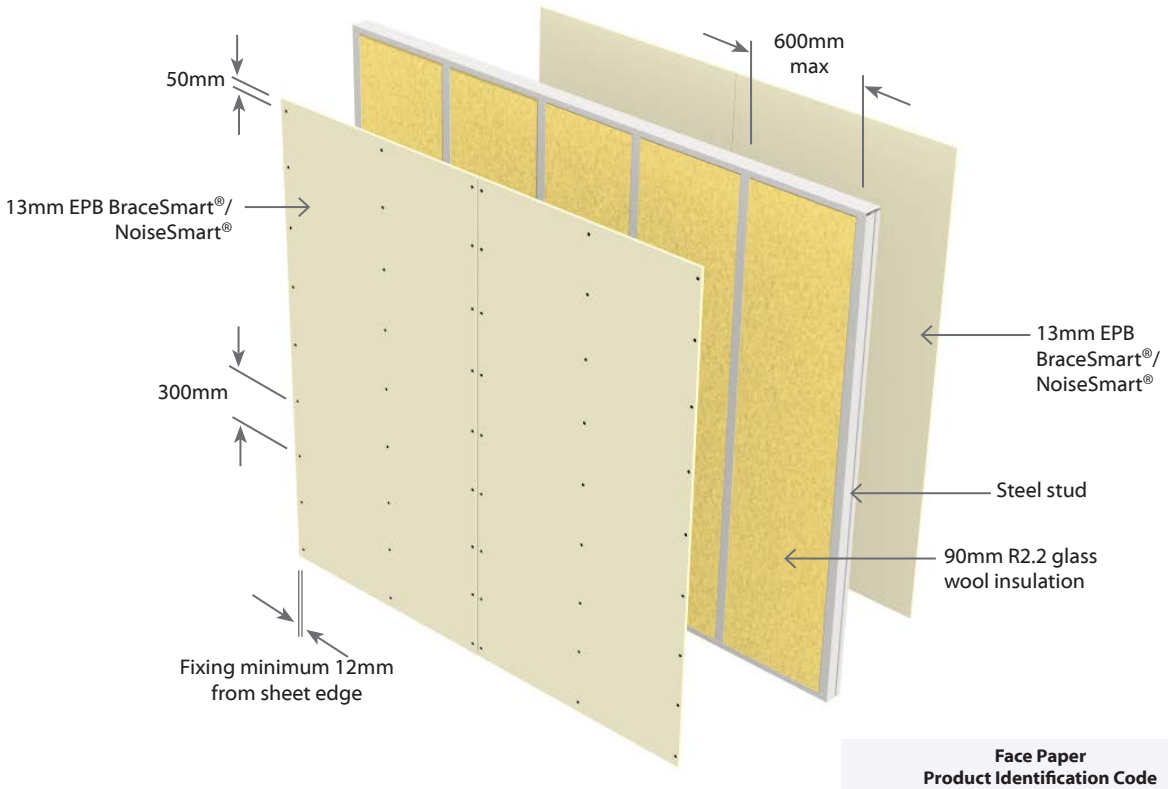

Face Paper Product Identification Code	
13mm EPB BraceSmart®/NoiseSmart®	**M13**

E2SSa30 — Staggered Steel Frame — Non Load Bearing — Two Way FRR

2 Layers: 1 Layer of Plasterboard to each side of frame — Sub Intertenancy **a**coustic

System Number	Lining Suffix	FRR	Load Bearing Ability	Noise Control		Lining Requirement
				STC	Rw	
E2SSa30	**-S26**	-/30/30	NLB	50	49	1 x 13mm EPB® Standard each side
	-M20	-/30/30	NLB	49	48	1 x 10mm EPB BraceSmart®/NoiseSmart® each side

Framing

Staggered Steel Frame – Tracks to be a minimum size of 92mm x 30mm x 0.55 BMT and are fixed to floor and ceiling. Steel studs with minimum dimensions 64 x 34mm x 0.55 BMT with 6mm return. Stud to be fixed to the tracks using Staggered Stud Clip and placed at 600mm centres with a 15mm expansion gap at top of frame. No other fixings to track are allowed. Studs to be offset 300mm centres.

Wall Heights

Recommended maximum height is 2.4m. Higher walls may be subject to specific engineering design or consult the framing manufacturer.

Partition Width

In order to achieve the STC ratings in the table above the partition width (excluding the board) shall be a minimum of 92mm.

Track Depth	Lining Suffix	Plasterboard	Total Partition
92mm	M20	20mm	112mm
	S26	26mm	118mm

Wall Sound Absorber

Install Sound Absorber between studs of the frame. Use 75mm thick R1.8 glass wool blanket. Split 600mm wide blankets into 300mm.

Plasterboard Lining

NB: The installer must look for the Product Identification Code on the face paper to ensure the correct board type is installed. Refer to the Face Paper Product Identification Code table on this page.

One layer of EPB® Plasterboard lining to each side of Staggered Steel frame as per specified system above.

Vertical fixing only permitted. Use full height sheets where possible. All sheet joints must be fixed over steel framing.

Sheet end butt joints must be formed over nogs. Sheets are fixed hard to the floor. Sheets shall be touch fitted.

Fixing of Linings (Non Fire Rated)

Fix the linings as per the EPB® Plasterboard Installation Guide. If an FRR is required then follow the Fixing of Linings instruction in the following paragraph.

Fixing of Linings (to achieve Fire Rating)

Fasteners (As per Specified System Above)

System Number	Side One	Side Two
	Single Layer	**Single Layer**
	Self-Tapping Drywall Screws	
E2SSa30-M20	10mm	10mm
	25 x 6g	25 x 6g
E2SSa30-S26	13mm	13mm
	25 x 6g	25 x 6g

Fastener Centres

Fix at 300mm centres up each stud with no fixing to top and bottom tracks.

Place fasteners no closer than 12mm to the sheet edge and 50mm from sheet ends.

Place fasteners at 200mm centres where sheet end butt joints occur.

Acoustic Sealant

A bead of acoustic sealant must be placed on the perimeter of the framing. The single or outer layer is then bedded onto the bead. The perimeter junctions of the wall must be airtight.

Jointing

All fastener heads stopped and all sheet joints reinforced with paper jointing tape and stopped. Wall to ceiling junctions are to be reinforced with paper tape and square stopped or finished with Cornice. All in accordance with EPB® Plasterboard Installation Guide.

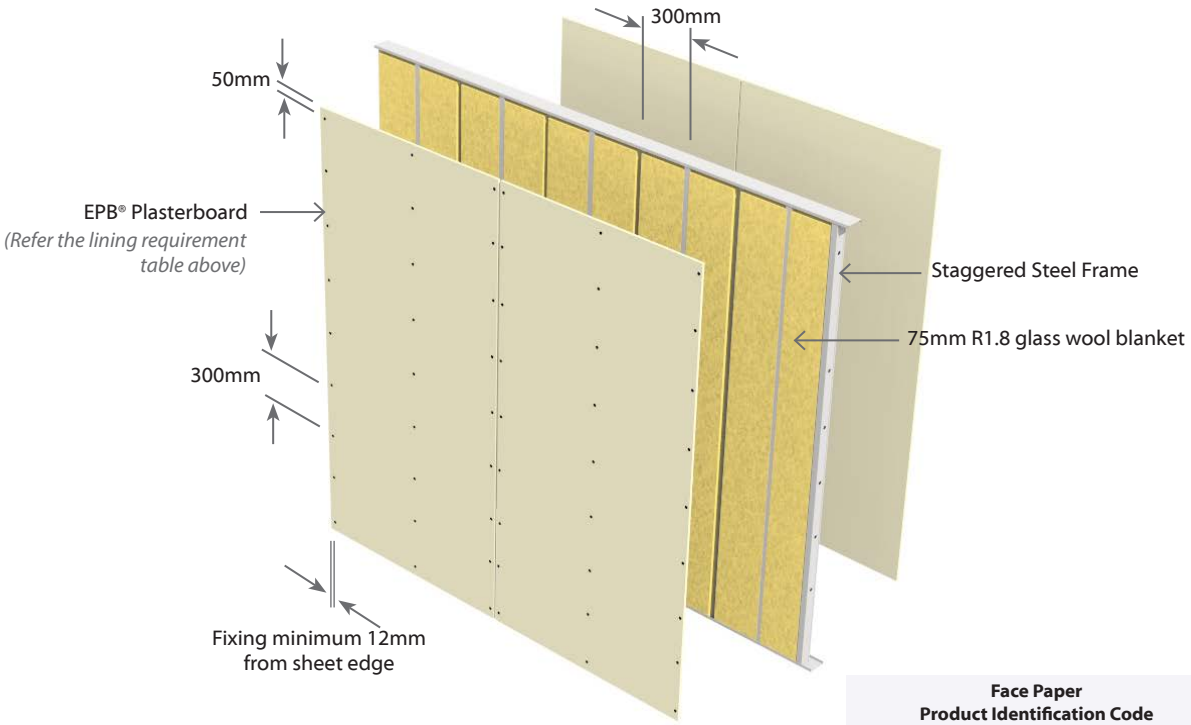

Face Paper Product Identification Code	
13mm EPB® Standard	**S13**
10mm EPB BraceSmart®/NoiseSmart®	**M10**

E2SSa60 — Staggered Steel Frame — Non Load Bearing — Two Way FRR

2 Layers: 1 Layer of Plasterboard to each side of frame — Sub Intertenancy **a**coustic

System Number	Lining Suffix	FRR	Load Bearing Ability	Noise Control		Lining Requirement
				STC	Rw	
E2SSa60	**-M26**	-/60/60	NLB	52	51	1 x 13mm EPB BraceSmart®/NoiseSmart® each side
	-F32	-/60/60	NLB	54	53	1 x 16mm EPB FireSmart® each side

Framing

Staggered Steel Frame – Tracks to be a minimum size of 92mm x 30mm x 0.55 BMT and are fixed to floor and ceiling. Steel studs with minimum dimensions 64 x 34mm x 0.55 BMT with 6mm return. Stud to be fixed to the tracks using Staggered Stud Clip and placed at 600mm centres with a 15mm expansion gap at top of frame. No other fixings to track are allowed. Studs to be offset 300mm centres.

Wall Heights

Recommended maximum height is 2.4m. Higher walls may be subject to specific engineering design or consult the framing manufacturer.

Partition Width

In order to achieve the STC ratings in the table above the partition width (excluding the board) shall be a minimum of 92mm.

Track Depth	Lining Suffix	Plasterboard	Total Partition
92mm	M26	26mm	118mm
92mm	F32	32mm	124mm

Wall Sound Absorber

Install Sound Absorber between studs of the frame. Use 75mm thick R1.8 glass wool blanket. Split 600mm wide blankets into 300mm.

Plasterboard Lining

NB: The installer must look for the Product Identification Code on the face paper to ensure the correct board type is installed. Refer to the Face Paper Product Identification Code table on this page.

One layer of EPB® Plasterboard lining to each side of Staggered Steel frame as per specified system above.

Vertical fixing only permitted. Use full height sheets where possible. All sheet joints must be fixed over steel framing.

Sheet end butt joints must be formed over nogs. Sheets are fixed hard to the floor. Sheets shall be touch fitted.

Fixing of Linings (Non Fire Rated)

Fix the linings as per the EPB® Plasterboard Installation Guide. If an FRR is required then follow the Fixing of Linings instruction in the following paragraph.

Fixing of Linings (to achieve Fire Rating)

Fasteners (As per Specified System Above)

System Number	Side One	Side Two
	Single Layer	**Single Layer**
	Self-Tapping Drywall Screws	
E2SSa60-M26	13mm	13mm
	25 x 6g	25 x 6g
E2SSa60-F32	16mm	16mm
	32 x 6g	32 x 6g

Fastener Centres

Fix at 300mm centres up each stud with no fixing to top and bottom tracks.

Place fasteners no closer than 12mm to the sheet edge and 50mm from sheet ends.

Place fasteners at 200mm centres where sheet end butt joints occur.

Acoustic Sealant

A bead of acoustic sealant must be placed on the perimeter of the framing. The single or outer layer is then bedded onto the bead. The perimeter junctions of the wall must be airtight.

Jointing

All fastener heads stopped and all sheet joints reinforced with paper jointing tape and stopped. Wall to ceiling junctions are to be reinforced with paper tape and square stopped or finished with Cornice. All in accordance with EPB® Plasterboard Installation Guide.

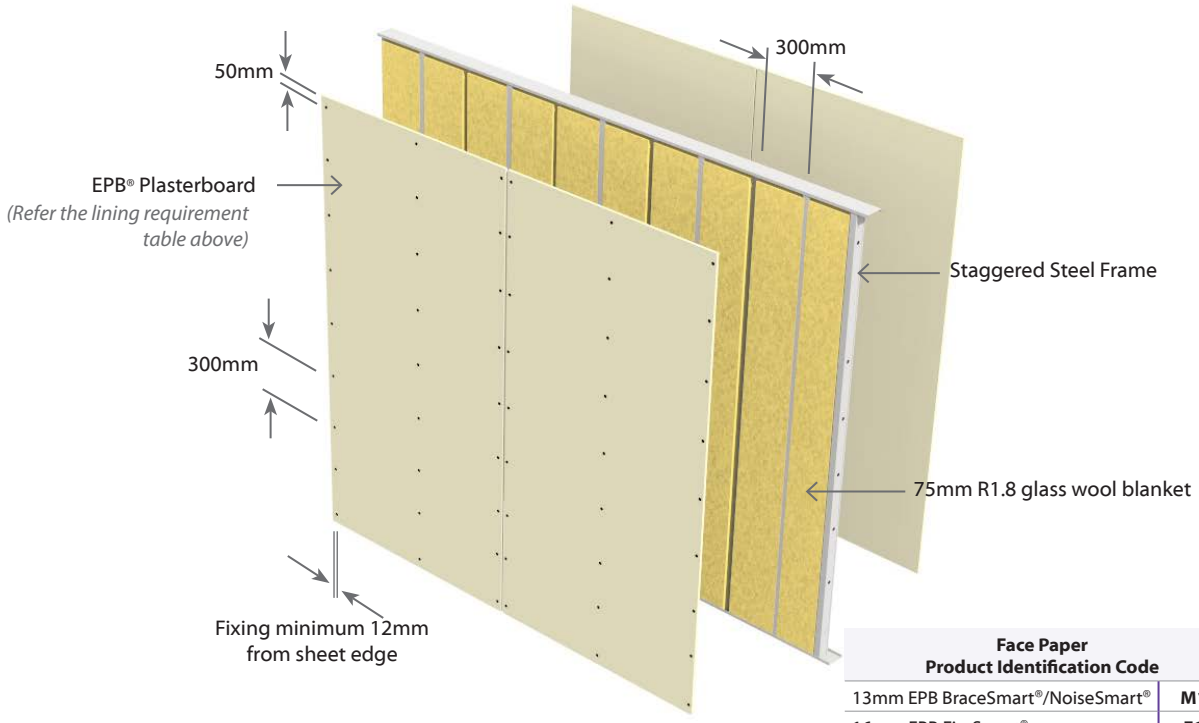

Face Paper Product Identification Code	
13mm EPB BraceSmart®/NoiseSmart®	**M13**
16mm EPB FireSmart®	**F16**

Sub Intertenancy Floor/Ceiling Systems

E1DFa15 — Direct Fix Clip - Floor/Ceiling — Load Bearing

1 Layer: 1 Layer of Plasterboard to underside of framing — Sub Intertenancy **a**coustic

System Number	Lining Suffix	FRR	Load Bearing Ability	Noise Control			Lining Requirement
				STC	Rw	IIC*	
E1DFa15	**-S13**	15/15/15	LB	48	47	43-69	1 x 13mm EPB® Standard (back blocked)

Framing
Timber floor joists shall comply with NZS3604 with a minimum depth of 190 x 45mm and spaced at no more than 600mm centres. Alternatively, a proprietary I-joist system may be used subject to specific structural design and approved by the normal building consent process.

Consult the joist manufacturer regarding construction of the solid blocking contained in the floor/ceiling to wall junctions.

Flooring
Flooring shall be 20mm thick particle board of 17mm thick structural ply, fixed to the joists as per manufacturer's instructions. Flooring sheet joints must have a polypropylene tongue and groove jointer or be formed over framing.

Acoustic Clip and Battens
The Acoustic Clip shall be fastened to the joists at 1200mm centres maximum (and no less than 900mm centres) to support the metal ceiling battens. They are spaced at 600mm centres maximum. Use 3 x 32mm x 8g Wafer Head screws. Insert first screw into the middle rubber grommet. Adjust clip to correct height. Then insert remaining two screws. Do not over tighten.

A minimum 10mm gap is recommended between the flange of the ceiling batten and the underside of the joist.

Ceiling Sound Absorber
Install Sound Absorber between joists above the metal ceiling battens. Use minimum 90mm thick R2.2 glass wool Acoustic insulation.

Plasterboard Lining
NB: The installer must look for the Product Identification Code on the face paper to ensure the correct board type is installed. Refer to the Face Paper Product Identification Code table on this page.

One layer of 13mm EPB® Standard fixed at right angles to the metal ceiling battens. All sheet end butt joints shall occur on the battens. For fire rated systems, joints formed by sheet edges shall be back blocked between furring channels with strips of plasterboard equivalent to the lining thickness used and with a minimum width 300mm. They shall be adhered with a cove or cornice bond adhesive. Sheets shall be touched fitted.

Fixing of Linings (Non Fire Rated)
Fix the linings as per the EPB® Plasterboard Installation Guide. If an FRR is required then follow the Fixing of Linings instruction in the following paragraph.

Fixing the Lining (to achieve Fire Rating)
Fasteners

System Number	Single Layer
	Self-Tapping Drywall Screws
E1DFa15-S13	13mm
	25 x 6g

Fastening Centres
Ceiling sheets shall be fixed at 200mm centres along each metal ceiling batten.

Fix butt ends at 100mm centres. Fasteners to be placed no closer than 12mm from sheet edge.

Acoustic Sealant
A bead of fire retardant acoustic sealant is required around the ceiling perimeter.

Wall/Ceiling Junction
The internal angle between the ceilings and walls must be protected by Cornice or square stopped corners taped and filled in accordance with EPB®Plasterboard Installation Guide.

Jointing
All fastener heads stopped and all sheet joints reinforced with paper jointing tape and stopped in accordance with the publication entitled EPB® Plasterboard Installation Guide.

***Impact Insulation Class (IIC)**
IIC of 43 is achieved with a bare floor.

IIC of 44 is achieved with loose laid Vinyl.

IIC of 68 is achieved with 40oz loop pile carpet on 8mm foam chip underlay.

IIC of 69 is achieved with 40oz loop pile carpet on waffle underlay.

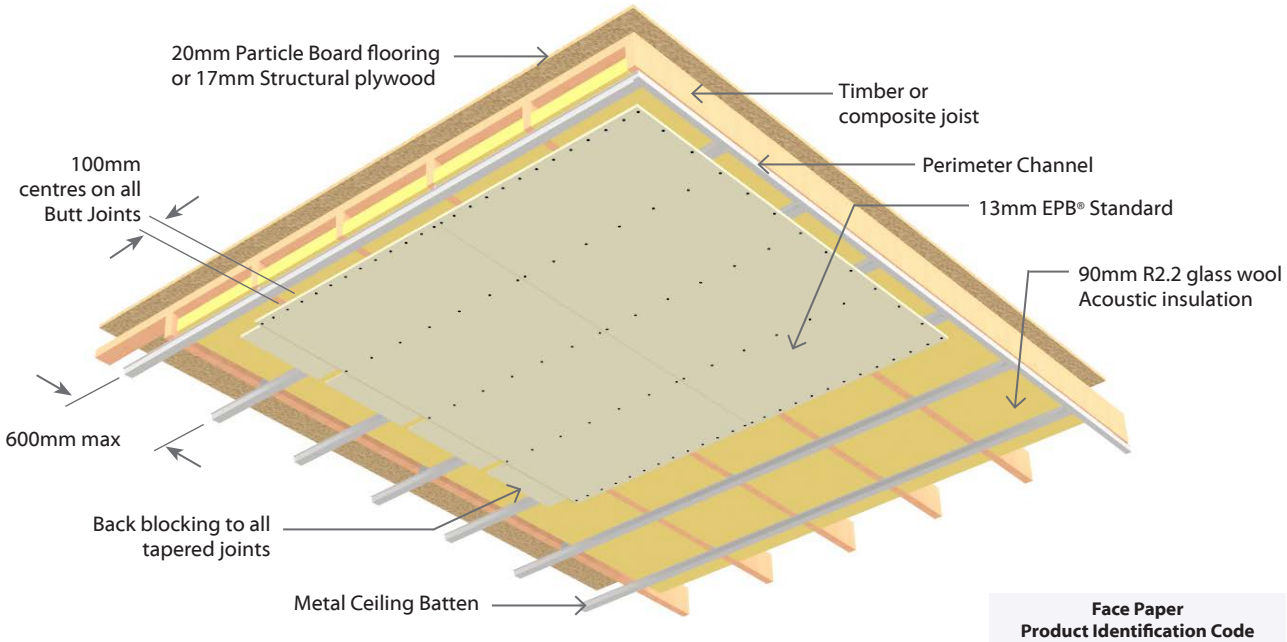

Face Paper Product Identification Code	
13mm EPB® Standard	**S13**

E2DFa30 Direct Fix Clip - Floor/Ceiling Load Bearing

2 Layers: 2 Layers of Plasterboard to underside of framing | Sub Intertenancy **a**coustic

System Number	Lining Suffix	FRR	Load Bearing Ability	Noise Control			Lining Requirement
				STC	Rw	IIC*	
E2DFa30	**-S26**	30/30/30	LB	53	52	43-69	2 x 13mm EPB® Standard

Framing
Timber floor joists shall comply with NZS3604 with a minimum depth of 190 x 45mm and spaced at no more than 600mm centres. Alternatively, a proprietary I-joist system may be used subject to specific structural design and approved by the normal building consent process.

Consult the joist manufacturer regarding construction of the solid blocking contained in the floor/ceiling to wall junctions.

Flooring
Flooring shall be 20mm thick particle board of 17mm thick structural ply, fixed to the joists as per manufacturer's instructions. Flooring sheet joints must have a polypropylene tongue and groove jointer or be formed over framing.

Acoustic Clip and Battens
The Acoustic Clip shall be fastened to the joists at 1200mm centres maximum (and no less than 900mm centres) to support the metal ceiling battens. They are spaced at 600mm centres maximum. Use 3 x 32mm x 8g Wafer Head screws. Insert first screw into the middle rubber grommet. Adjust clip to correct height. Then insert remaining two screws. Do not over tighten.

A minimum 10mm gap is recommended between the flange of the ceiling batten and the underside of the joist.

Ceiling Sound Absorber
Install Sound Absorber between joists above the metal ceiling battens. Use minimum 90mm thick R2.2 glass wool Acoustic insulation.

Plasterboard Lining
NB: The installer must look for the Product Identification Code on the face paper to ensure the correct board type is installed. Refer to the Face Paper Product Identification Code table on this page.

Two layers of 13mm EPB® Standard fixed at right angles to the metal ceiling battens. All sheet end butt joints shall occur on the battens. Offset the outer layer by 600mm from that of the inner layer.

Sheet joints should be touched fitted.

Fixing of Linings (Non Fire Rated)
Fix the linings as per the EPB® Installation Guide. If an FRR is required then follow the Fixing of Linings instruction in the following paragraph.

Fixing the Lining (to achieve Fire Rating)
Fasteners

System Number	1st Layer	2nd Layer
	Self-Tapping Drywall Screws	
E2DFa30-S26	13mm	13mm
	25 x 6g	41 x 6g

Fastening Centres

Ceiling sheets shall be fixed at 200mm centres along each metal ceiling batten.

Fix butt ends at 100mm centres.

Fasteners to be placed no closer than 12mm from sheet edge.

Acoustic Sealant
A bead of fire retardant Acoustic Sealant must be applied around the perimeter of the first layer and the second layer bedded on the bead

Wall/Ceiling Junction
The internal angle between the ceilings and walls must be protected by Cornice or square stopped corners taped and filled in accordance with EPB Plasterboard Installation Guide

Jointing
Inner layer: Unstopped.

Outer Layer: All fastener heads stopped and all sheet joints reinforced with paper jointing tape and stopped in accordance with the publication entitled EPB® Plasterboard Installation Guide.

***Impact Insulation Class (IIC)**

IIC of 43 is achieved with a bare floor.

IIC of 44 is achieved with loose laid Vinyl.

IIC of 68 is achieved with 40oz loop pile carpet on 8mm foam chip underlay.

IIC of 69 is achieved with 40oz loop pile carpet on waffle underlay.

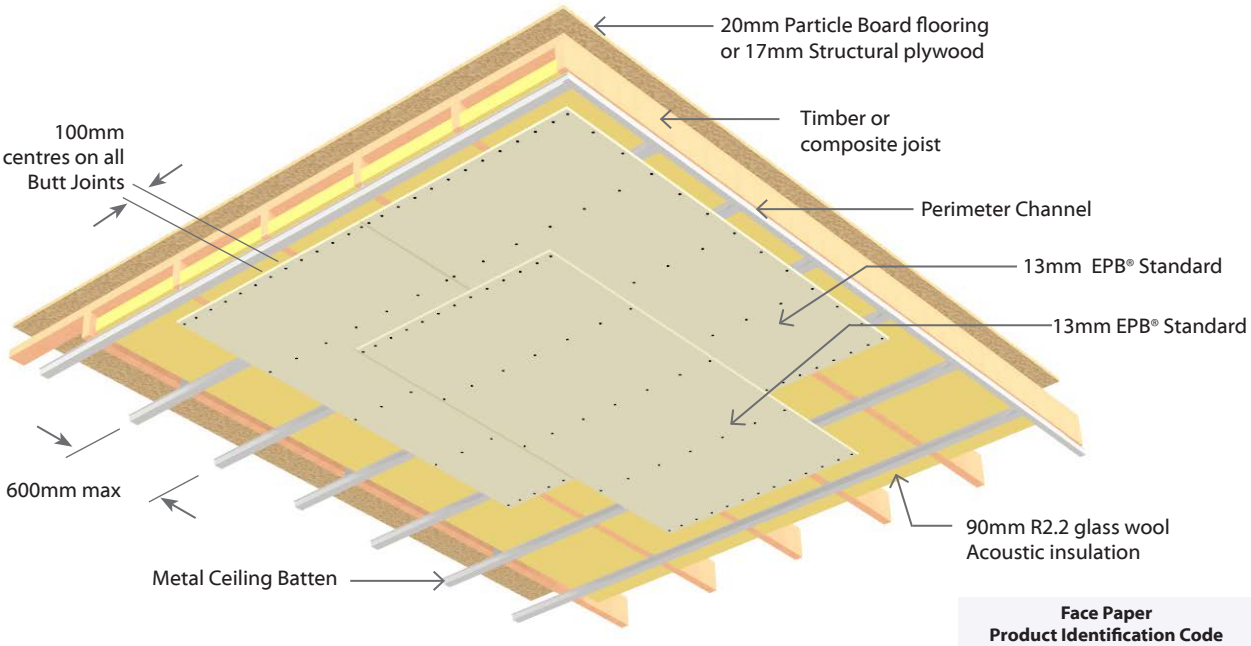

Face Paper Product Identification Code	
13mm EPB® Standard	**S13**

E1DFa45 | Direct Fix Clip - Floor/Ceiling | Load Bearing

1 Layer: 1 Layer of Plasterboard to underside of framing | Sub Intertenancy acoustic

System Number	Lining Suffix	FRR	Load Bearing Ability	Noise Control			Lining Requirement
				STC	Rw	IIC*	
E1DFa45	**-M13**	45/45/45	LB	52	51	43-69	1 x 13mm EPB BraceSmart®/NoiseSmart® (back blocked)

Framing
Timber floor joists shall comply with NZS3604 with a minimum depth of 190 x 45mm and spaced at no more than 600mm centres. Alternatively, a proprietary I-joist system may be used subject to specific structural design and approved by the normal building consent process.

Consult the joist manufacturer regarding construction of the solid blocking contained in the floor/ceiling to wall junctions.

Flooring
Flooring shall be 20mm thick particle board of 17mm thick structural ply, fixed to the joists as per manufacturer's instructions. Flooring sheet joints must have a polypropylene tongue and groove jointer or be formed over framing.

Acoustic Clip and Battens
The Acoustic Clip shall be fastened to the joists at 1200mm centres maximum (and no less than 900mm centres) to support the metal ceiling battens. They are spaced at 600mm centres maximum. Use 3 x 32mm x 8g Wafer Head screws. Insert first screw into the middle rubber grommet. Adjust clip to correct height. Then insert remaining two screws. Do not over tighten.

A minimum 10mm gap is recommended between the flange of the ceiling batten and the underside of the joist.

Ceiling Sound Absorber
Install Sound Absorber between joists above the metal ceiling battens. Use minimum 90mm thick R2.2 glass wool Acoustic insulation.

Plasterboard Lining
NB: The installer must look for the Product Identification Code on the face paper to ensure the correct board type is installed. Refer to the Face Paper Product Identification Code table on this page.

One layer of 13mm EPB BraceSmart®/NoiseSmart® fixed at right angles to the metal ceiling battens. All sheet end butt joints shall occur on the battens. For fire rated systems, joints formed by sheet edges shall be back blocked between furring channels with strips of plasterboard equivalent to the lining thickness used and with a minimum width 300mm. They shall be adhered with a cove or cornice bond adhesive. Sheets shall be touched fitted.

Fixing of Linings (Non Fire Rated)
Fix the linings as per the EPB® Plasterboard Installation Guide. If an FRR is required then follow the Fixing of Linings instruction in the following paragraph.

Fixing the Lining (to achieve Fire Rating)
Fasteners

System Number	Single Layer
	Self-Tapping Drywall Screws
E1DFa45-M13	13mm
	25 x 6g

Fastening Centres

Ceiling sheets shall be fixed at 200mm centres along each metal ceiling batten and around ceiling perimeter.

Fix butt ends at 100mm centres.

Fasteners to be placed no closer than 12mm from sheet edge.

Acoustic Sealant

A bead of fire retardant acoustic sealant is required around the ceiling perimeter.

Wall/Ceiling Junction
The internal angle between the ceilings and walls must be protected by Cornice or square stopped corners taped and filled in accordance with EPB Plasterboard Installation Guide.

Jointing
All fastener heads stopped and all sheet joints reinforced with paper jointing tape and stopped in accordance with the publication entitled EPB® Plasterboard Installation Guide.

***Impact Insulation Class (IIC)**

IIC of 43 is achieved with a bare floor.

IIC of 44 is achieved with loose laid Vinyl.

IIC of 68 is achieved with 40oz loop pile carpet on 8mm foam chip underlay.

IIC of 69 is achieved with 40oz loop pile carpet on waffle underlay.

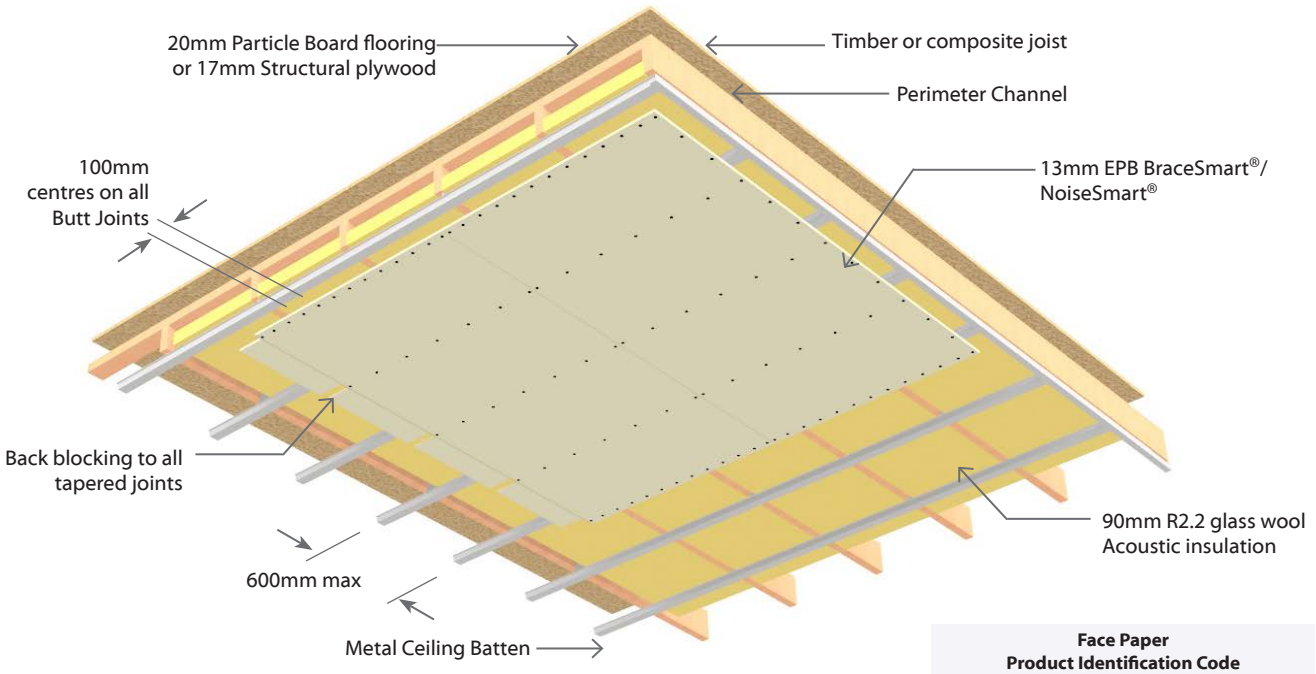

Face Paper Product Identification Code	
13mm EPB BraceSmart®/NoiseSmart®	**M13**

E1DFa60 | Direct Fix Clip - Floor/Ceiling | Load Bearing

1 Layer: 1 Layer of Plasterboard to underside of framing | Sub Intertenancy acoustic

System Number	Lining Suffix	FRR	Load Bearing Ability	Noise Control			Lining Requirement
				STC	Rw	IIC*	
E1DFa60	**-F16**	60/60/60	LB	52	51	43-69	1 x 16mm EPB FireSmart® (back blocked)

Framing
Timber floor joists shall comply with NZS3604 with a minimum depth of 190 x 45mm and spaced at no more than 600mm centres. Alternatively, a proprietary I-joist system may be used subject to specific structural design and approved by the normal building consent process.

Consult the joist manufacturer regarding construction of the solid blocking contained in the floor/ceiling to wall junctions.

Flooring
Flooring shall be 20mm thick particle board of 17mm thick structural ply, fixed to the joists as per manufacturer's instructions. Flooring sheet joints must have a polypropylene tongue and groove jointer or be formed over framing.

Acoustic Clip and Battens
The Acoustic Clip shall be fastened to the joists at 1200mm centres maximum (and no less than 900mm centres) to support the metal ceiling battens. They are spaced at 600mm centres maximum. Use 3 x 32mm x 8g Wafer Head screws. Insert first screw into the middle rubber grommet. Adjust clip to correct height. Then insert remaining two screws. Do not over tighten.

A minimum 10mm gap is recommended between the flange of the ceiling batten and the underside of the joist.

Ceiling Sound Absorber
Install Sound Absorber between joists above the metal ceiling battens. Use minimum 90mm thick R2.2 glass wool Acoustic insulation.

Plasterboard Lining
NB: The installer must look for the Product Identification Code on the face paper to ensure the correct board type is installed. Refer to the Face Paper Product Identification Code table on this page.

One layer of 16mm EPB FireSmart® fixed at right angles to the metal ceiling battens. All sheet end butt joints shall occur on the battens. For fire rated systems, joints formed by sheet edges shall be back blocked between furring channels with strips of plasterboard equivalent to the lining thickness used and with a minimum width 300mm. They shall be adhered with a cove or cornice bond adhesive. Sheets shall be touched fitted.

Fixing of Linings (Non Fire Rated)
Fix the linings as per the EPB® Plasterboard Installation Guide. If an FRR is required then follow the Fixing of Linings instruction in the following paragraph.

Fixing the Lining (to achieve Fire Rating)
Fasteners

System Number	Single Layer
	Self-Tapping Drywall Screws
E1DFa60-F16	16mm
	32 x 6g

Fastening Centres

Ceiling sheets shall be fixed at 200mm centres along each metal ceiling batten and around ceiling perimeter.

Fix butt ends at 100mm centres.

Fasteners to be placed no closer than 12mm from sheet edge.

Acoustic Sealant

A bead of fire retardant acoustic sealant is required around the ceiling perimeter.

Wall/Ceiling Junction
The internal angle between the ceilings and walls must be protected by Cornice or square stopped corners taped and filled in accordance with EPB® Plasterboard Installation Guide.

Jointing
All fastener heads stopped and all sheet joints reinforced with paper jointing tape and stopped in accordance with the publication entitled EPB® Plasterboard Installation Guide.

***Impact Insulation Class (IIC)**

IIC of 43 is achieved with a bare floor.

IIC of 44 is achieved with loose laid Vinyl.

IIC of 68 is achieved with 40oz loop pile carpet on 8mm foam chip underlay.

IIC of 69 is achieved with 40oz loop pile carpet on waffle underlay.

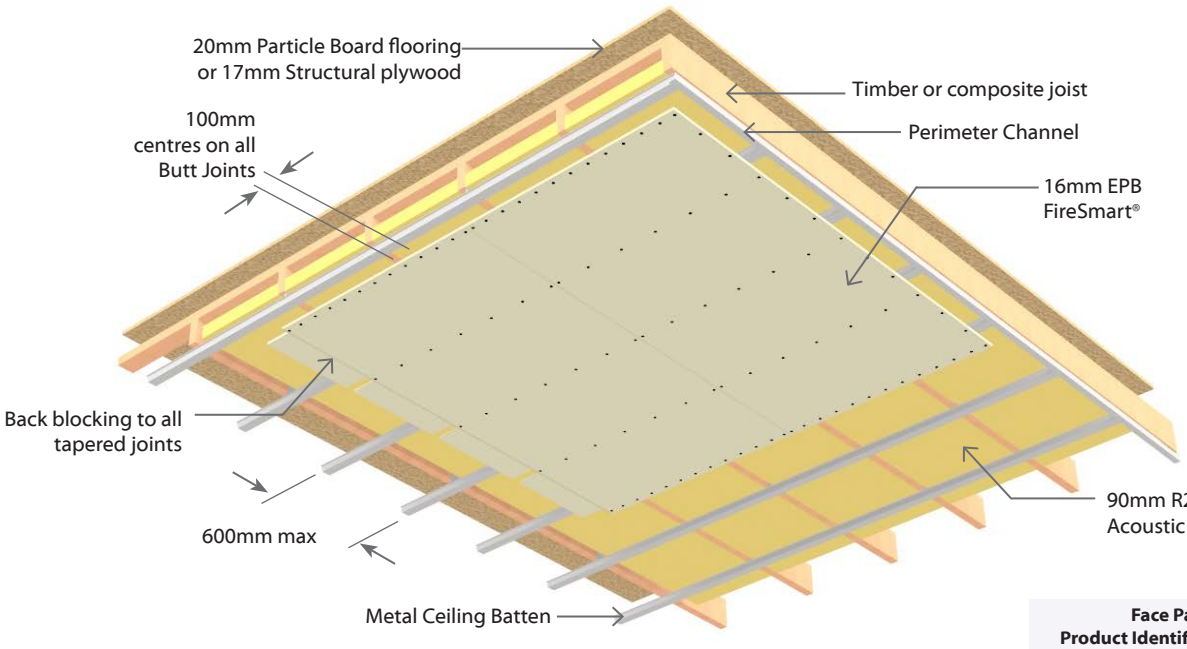

Face Paper Product Identification Code	
16mm EPB FireSmart®	**F16**

E1SCa15 | Suspended Grid - Floor/Ceiling | Load Bearing

1 Layer: 1 Layer of Plasterboard to underside of framing | Sub Intertenancy **a**coustic

System Number	Lining Suffix	FRR	Load Bearing Ability	Noise Control			Lining Requirement
				STC	Rw	IIC*	
E1SCa15	**-S13**	15/15/15	LB	48	47	39-62	1 x 13mm EPB® Standard (back blocked)

Framing
Timber floor joists shall comply with NZS3604 with a minimum depth of 190 x 45mm and spaced at no more than 600mm centres. Alternatively, a proprietary I-joist system may be used subject to specific structural design and approved by the normal building consent process.

Flooring
Flooring shall be 20mm thick particle board of 17mm thick structural ply, fixed to the joists as per manufacturer's instructions. Flooring sheet joints must have a polypropylene tongue and groove jointer or be formed over framing.

Minimum Cavity Depth
Acoustic Systems require a minimum of 275mm cavity depth

Suspension System
Rondo ScrewFix® steel frame suspension system comprising 2.5mm wire hangers at 1200mm centres supporting F38 strong back channels spaced at a maximum of 1200mm centres and F37 furring channels at 600mm centres.

Alternative suspension systems with equivalent performance characteristics and layout may be used.

Suspended Grid ceiling system to be installed as per manufacturer's specification.

Ceiling Sound Absorber
Install Sound Absorber over the suspension system. Use minimum 90mm thick R2.2 glass wool blanket.

Plasterboard Lining
NB: The installer must look for the Product Identification Code on the face paper to ensure the correct board type is installed. Refer to the Face Paper Product Identification Code table on this page.

One layer of 13mm EPB® Standard fixed at right angles to the metal furring channels. All sheet butt joints should occur on the furring channel. For fire rated systems, joints formed by sheet edges shall be back blocked between furring channels with strips plasterboard equivalent to the lining thickness used and with a minimum width 300mm. They shall be adhered with a cove or cornice bond adhesive. Sheet joints shall be touched fitted.

Fixing of Linings (Non Fire Rated)
Fix the linings as per the EPB® Plasterboard Installation Guide. If an FRR is required then follow the Fixing of Linings instruction in the following paragraph.

Fixing the Lining (to achieve Fire Rating)
Fasteners

System Number	Single Layer
	Self-Tapping Drywall Screws
E1SCa15-S13	13mm
	25 x 6g

Fastening Centres

Ceiling sheets shall be fixed at 200mm centres along each furring channel and around the ceiling perimeter.

Fix at 100mm centres where butt joints occur.

Fasteners to be placed no closer than 12mm from sheet edge.

Acoustic Sealant
A bead of fire retardant acoustic sealant is required around the ceiling perimeter.

Wall/Ceiling Junction
The internal angle between the ceilings and walls must be protected by Cornice or square stopped corners taped and filled in accordance with EPB® Plasterboard Installation Guide.

Jointing
All fastener heads stopped and all sheet joints reinforced with paper jointing tape and stopped in accordance with the publication entitled EPB® Plasterboard Installation Guide.

***Impact Insulation Class (IIC)**

IIC of 39 is achieved with a bare floor.

IIC of 40 is achieved with loose laid Vinyl.

IIC of 60 is achieved with 40oz loop pile carpet on 8mm foam chip underlay.

IIC of 62 is achieved with 40oz loop pile carpet on waffle underlay.

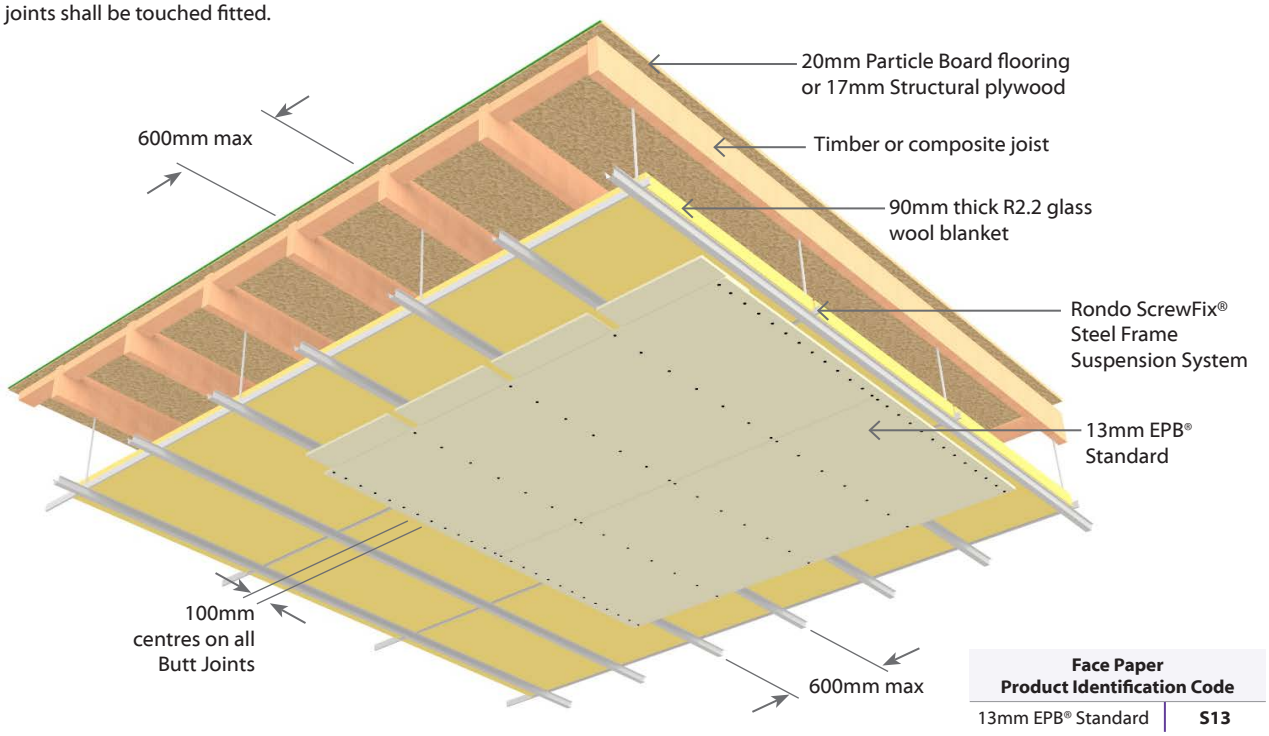

Face Paper Product Identification Code	
13mm EPB® Standard	**S13**

E2SCa30 | Suspended Grid - Floor/Ceiling | Load Bearing

2 Layers: 2 Layers of Plasterboard to underside of framing | Sub Intertenancy acoustic

System Number	Lining Suffix	FRR	Load Bearing Ability	Noise Control			Lining Requirement
				STC	Rw	IIC*	
E2SCa30	**-S26**	30/30/30	LB	53	52	42-67	2 x 13mm EPB® Standard (back blocked)

Framing
Timber floor joists shall comply with NZS3604 with a minimum depth of 190 x 45mm and spaced at no more than 600mm centres. Alternatively, a proprietary I-joist system may be used subject to specific structural design and approved by the normal building consent process.

Flooring
Flooring shall be 20mm thick particle board of 17mm thick structural ply, fixed to the joists as per manufacturer's instructions. Flooring sheet joints must have a polypropylene tongue and groove jointer or be formed over framing.

Minimum Cavity Depth
Acoustic Systems require a minimum of 275mm cavity depth

Suspension System
Rondo ScrewFix® steel frame suspension system comprising 2.5mm wire hangers at 1200mm centres supporting F38 strongback channels spaced at a maximum of 1200mm centres and F37 furring channels at 600mm centres.

Alternative suspension systems with equivalent performance characteristics and layout may be used.

Suspended Grid ceiling system to be installed as per manufacturer's specification.

Ceiling Sound Absorber
Install Sound Absorber over the suspension system. Use minimum 90mm thick R2.2 glass wool blanket.

Plasterboard Lining
NB: The installer must look for the Product Identification Code on the face paper to ensure the correct board type is installed. Refer to the Face Paper Product Identification Code table on this page.

Two layers of 13mm EPB® Standard fixed at right angles to metal furring channels. Offset the joints of the outer layer by 600mm from those of the inner layer. All sheet butt joints should occur on the furring channel. Sheet joints shall be touched fitted.

Fixing of Linings (Non Fire Rated)
Fix the linings as per the EPB® Plasterboard Installation Guide. If an FRR is required then follow the Fixing of Linings instruction in the following paragraph.

Fixing the Lining (to achieve Fire Rating)
Fasteners

System Number	1st Layer	2nd Layer
	Self-Tapping Drywall Screws	
E2SCa30-S26	13mm	13mm
	25 x 6g	41 x 6g

Fastening Centres
Ceiling sheets shall be fixed at 200mm centres along each furring channel and around the ceiling perimeter.

Fix at 100mm centres where butt joints occur. Fasteners to be placed no closer than 12mm from sheet edge.

Acoustic Sealant
A bead of Acoustic Sealant must be applied on the inner layer around the perimeter of the ceiling. The outer layer is then bedded into the bead.

Wall/Ceiling Junction
The internal angle between the ceilings and walls must be protected by Cornice or square stopped corners taped and filled in accordance with EPB® Plasterboard Installation Guide.

Jointing
Inner layer: Unstopped.

Outer Layer: All fastener heads stopped and all sheet joints reinforced with paper jointing tape and stopped in accordance with the publication entitled EPB® Plasterboard Installation Guide.

***Impact Insulation Class (IIC)**
IIC of 42 is achieved with a bare floor.

IIC of 43 is achieved with loose laid Vinyl.

IIC of 66 is achieved with 40oz loop pile carpet on 8mm foam chip underlay.

IIC of 67 is achieved with 40oz loop pile carpet on waffle underlay.

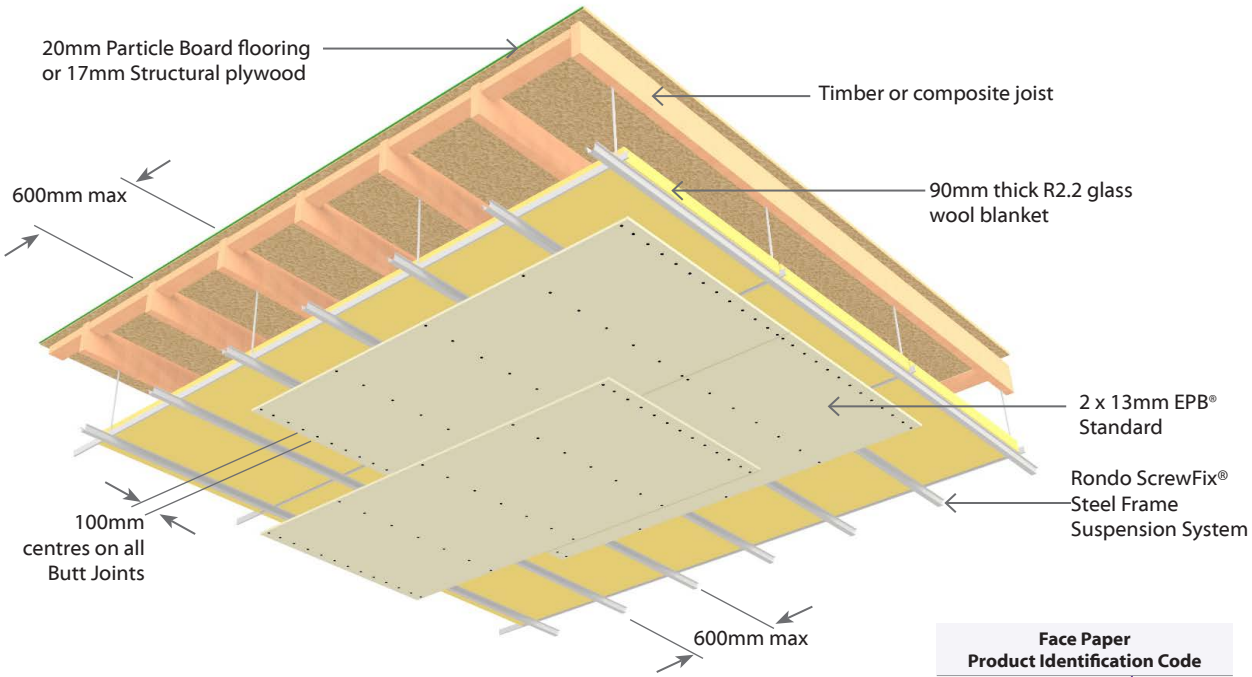

Face Paper Product Identification Code	
13mm EPB® Standard	**S13**

E1SCa45 Suspended Grid - Floor/Ceiling Load Bearing

1 Layer: 1 Layer of Plasterboard to underside of framing | Sub Intertenancy **a**coustic

System Number	Lining Suffix	FRR	Load Bearing Ability	Noise Control			Lining Requirement
				STC	Rw	IIC*	
E1SCa45	**-M13**	45/45/45	LB	51	50	43-69	1 x 13mm EPB BraceSmart®/NoiseSmart® (back blocked)

Framing
Timber floor joists shall comply with NZS3604 with a minimum depth of 190 x 45mm and spaced at no more than 600mm centres. Alternatively, a proprietary I-joist system may be used subject to specific structural design and approved by the normal building consent process.

Flooring
Flooring shall be 20mm thick particle board of 17mm thick structural ply, fixed to the joists as per manufacturer's instructions. Flooring sheet joints must have a polypropylene tongue and groove jointer or be formed over framing.

Minimum Cavity Depth
Acoustic Systems require a minimum of 275mm cavity depth

Suspension System
Rondo ScrewFix® steel frame suspension system comprising 2.5mm wire hangers at 1200mm centres supporting F38 strongback channels spaced at a maximum of 1200mm centres and F37 furring channels at 600mm centres.

Alternative suspension systems with equivalent performance characteristics and layout may be used.

Suspended Grid ceiling system to be installed as per manufacturer's specification.

Ceiling Sound Absorber
Install Sound Absorber over the suspension system. Use minimum 90mm thick R2.2 glass wool blanket.

Plasterboard Lining
One layer of 13mm EPB BraceSmart®/NoiseSmart® fixed at right angles to the metal furring channels. All sheet butt joints should occur on the furring channel. For fire rated systems, joints formed by sheet edges shall be back blocked between furring channels with strips plasterboard equivalent to the lining thickness used and with a minimum width 300mm. They shall be adhered with a cove or cornice bond adhesive. Sheet joints shall be touched fitted.

Fixing of Linings (Non Fire Rated)
Fix the linings as per the EPB® Plasterboard Installation Guide. If an FRR is required then follow the Fixing of Linings instruction in the following paragraph.

Fixing the Lining (to achieve Fire Rating)
Fasteners

System Number	Single Layer
	Self-Tapping Drywall Screws
E1SCa45-M13	13mm
	25 x 6g

Fastening Centres
Ceiling sheets shall be fixed at 200mm centres along each furring channel and around the ceiling perimeter.

Fix at 100mm centres where butt joints occur. Fasteners to be placed no closer than 12mm from sheet edge.

Acoustic Sealant
A bead of fire retardant acoustic sealant is required around the ceiling perimeter.

Wall/Ceiling Junction
The internal angle between the ceilings and walls must be protected by Cornice or square stopped corners taped and filled in accordance with EPB® Plasterboard Installation Guide.

Jointing
All fastener heads stopped and all sheet joints reinforced with paper jointing tape and stopped in accordance with the publication entitled EPB® Plasterboard Installation Guide.

***Impact Insulation Class (IIC)**
IIC of 43 is achieved with a bare floor.

IIC of 44 is achieved with loose laid Vinyl.

IIC of 68 is achieved with 40oz loop pile carpet on 8mm foam chip underlay.

IIC of 69 is achieved with 40oz loop pile carpet on waffle underlay.

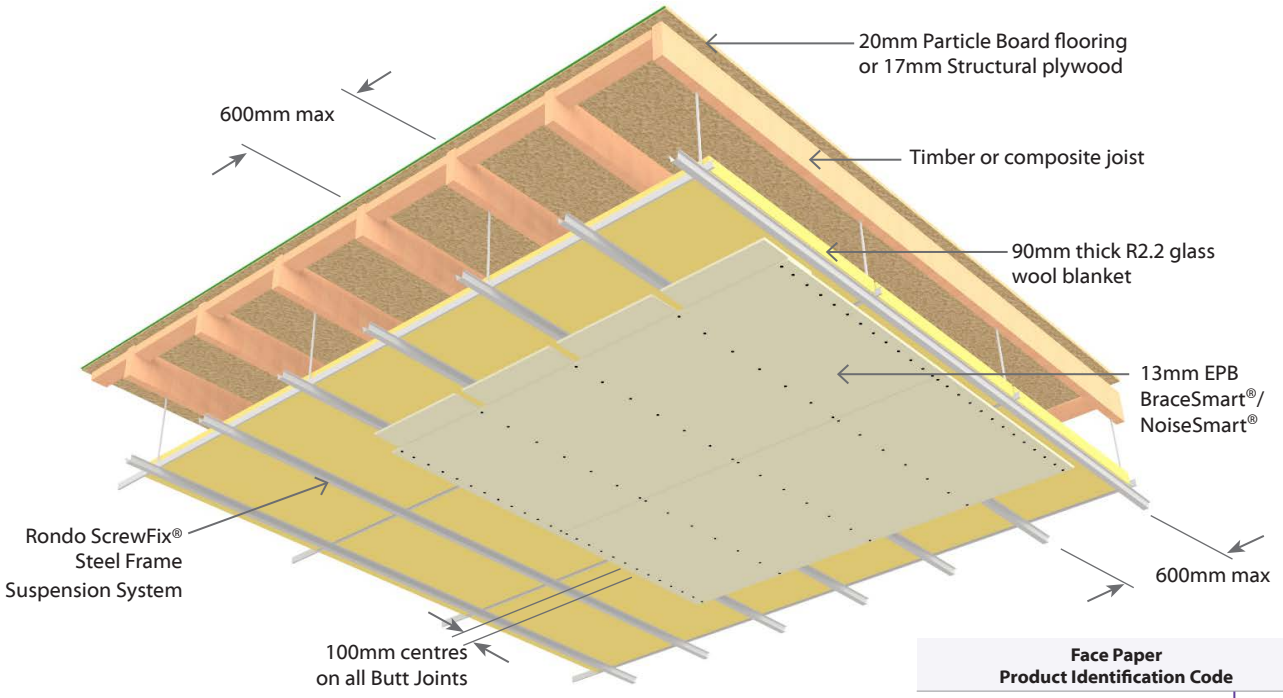

Face Paper Product Identification Code	
13mm EPB BraceSmart®/NoiseSmart®	**M13**

E1SCa60 | Suspended Grid - Floor/Ceiling | Load Bearing

1 Layer: 1 Layer of Plasterboard to underside of framing | Sub Intertenancy acoustic

System Number	Lining Suffix	FRR	Load Bearing Ability	Noise Control			Lining Requirement
				STC	Rw	IIC*	
E1SCa60	**-F16**	60/60/60	LB	52	51	43-69	1 x 16mm EPB FireSmart® (back blocked)

Framing
Timber floor joists shall comply with NZS3604 with a minimum depth of 190 x 45mm and spaced at no more than 600mm centres. Alternatively, a proprietary I-joist system may be used subject to specific structural design and approved by the normal building consent process.

Flooring
Flooring shall be 20mm thick particle board of 17mm thick structural ply, fixed to the joists as per manufacturer's instructions. Flooring sheet joints must have a polypropylene tongue and groove jointer or be formed over framing.

Minimum Cavity Depth
Acoustic Systems require a minimum of 275mm cavity depth

Suspension System
Rondo ScrewFix® steel frame suspension system comprising 2.5mm wire hangers at 1200mm centres supporting F38 strongback channels spaced at a maximum of 1200mm centres and F37 furring channels at 600mm centres.

Alternative suspension systems with equivalent performance characteristics and layout may be used.

Suspended Grid ceiling system to be installed as per manufacturer's specification.

Ceiling Sound Absorber
Install Sound Absorber over the suspension system. Use minimum 90mm thick R2.2 glass wool blanket.

Plasterboard Lining
One layer of 16mm EPB FireSmart® fixed at right angles to the metal furring channels. All sheet butt joints should occur on the furring channel. For fire rated systems, joints formed by sheet edges shall be back blocked between furring channels with strips plasterboard equivalent to the lining thickness used and with a minimum width 300mm. They shall be adhered with a cove or cornice bond adhesive. Sheet joints shall be touched fitted.

Fixing of Linings (Non Fire Rated)
Fix the linings as per the EPB® Plasterboard Installation Guide. If an FRR is required then follow the Fixing of Linings instruction in the following paragraph.

Fixing the Lining (to achieve Fire Rating)
Fasteners

System Number	Single Layer
	Self-Tapping Drywall Screws
E1SCa60-F16	16mm
	32 x 6g

Fastening Centres
Ceiling sheets shall be fixed at 200mm centres along each furring channel and around the ceiling perimeter.

Fix at 100mm centres where butt joints occur. Fasteners to be placed no closer than 12mm from sheet edge.

Acoustic Sealant
A bead of fire retardant acoustic sealant is required around the ceiling perimeter.

Wall/Ceiling Junction
The internal angle between the ceilings and walls must be protected by Cornice or square stopped corners taped and filled in accordance with EPB® Plasterboard Installation Guide.

Jointing
All fastener heads stopped and all sheet joints reinforced with paper jointing tape and stopped in accordance with the publication entitled EPB® Plasterboard Installation Guide.

***Impact Insulation Class (IIC)**
IIC of 43 is achieved with a bare floor.

IIC of 44 is achieved with loose laid Vinyl.

IIC of 68 is achieved with 40oz loop pile carpet on 8mm foam chip underlay.

IIC of 69 is achieved with 40oz loop pile carpet on waffle underlay.

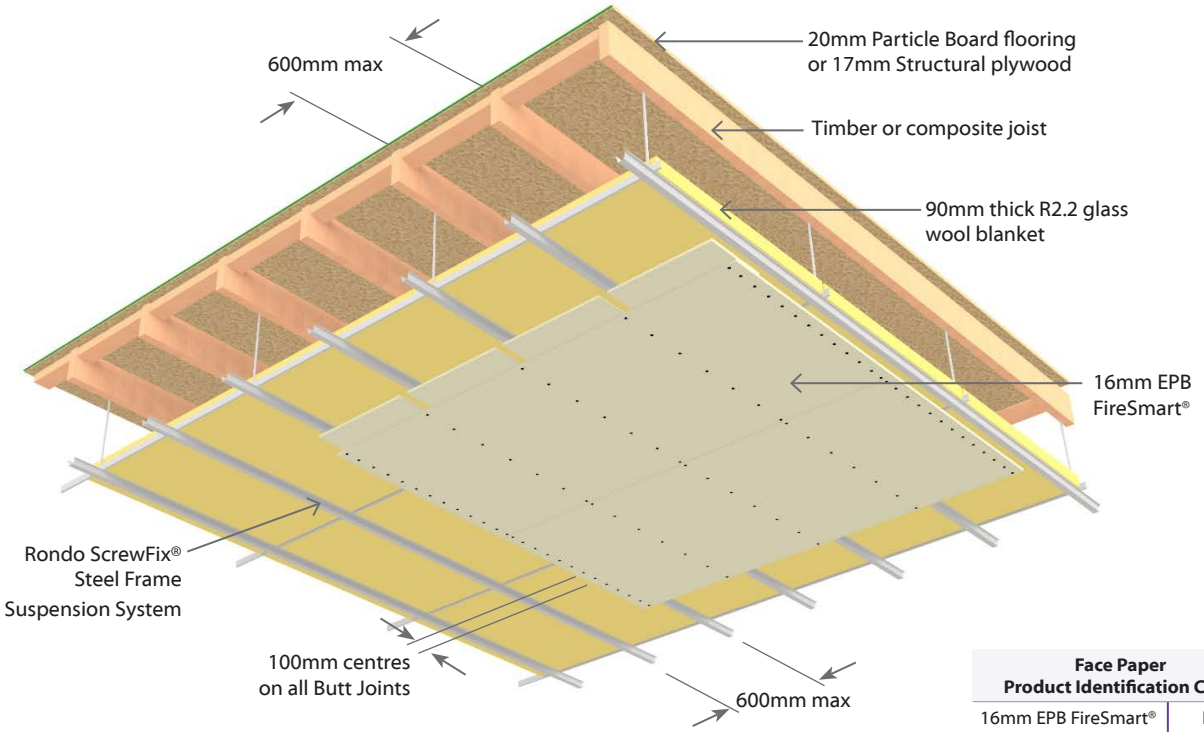

Face Paper Product Identification Code	
16mm EPB FireSmart®	**F16**

Construction Details

Penetration Detail

ENS-351 Cable Penetrations for Surface mounted electrical fixtures

Plan View

Single Cable

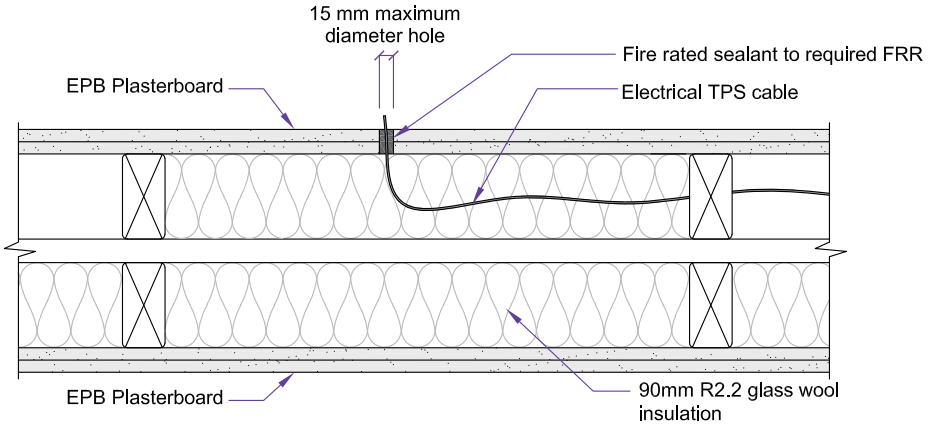

Looped Cable

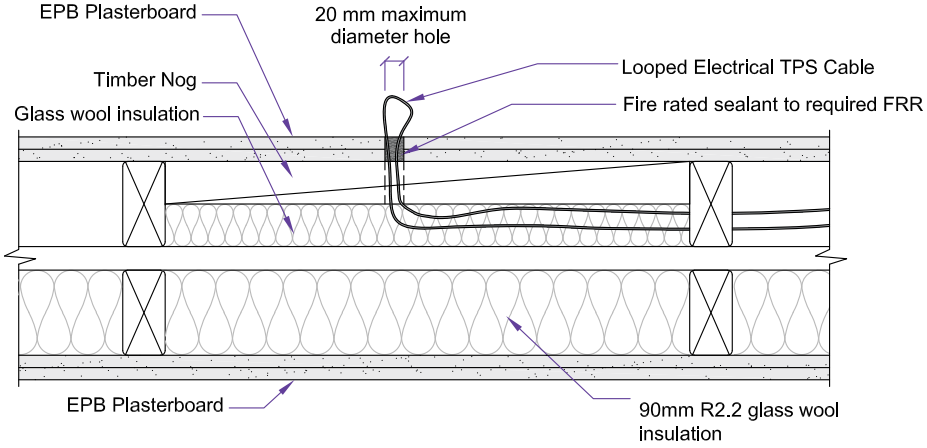

Note: Refer proprietary products & penetration seal manufacturer's specifications & limitations for larger holes

ENS-352 Flush Box Offset

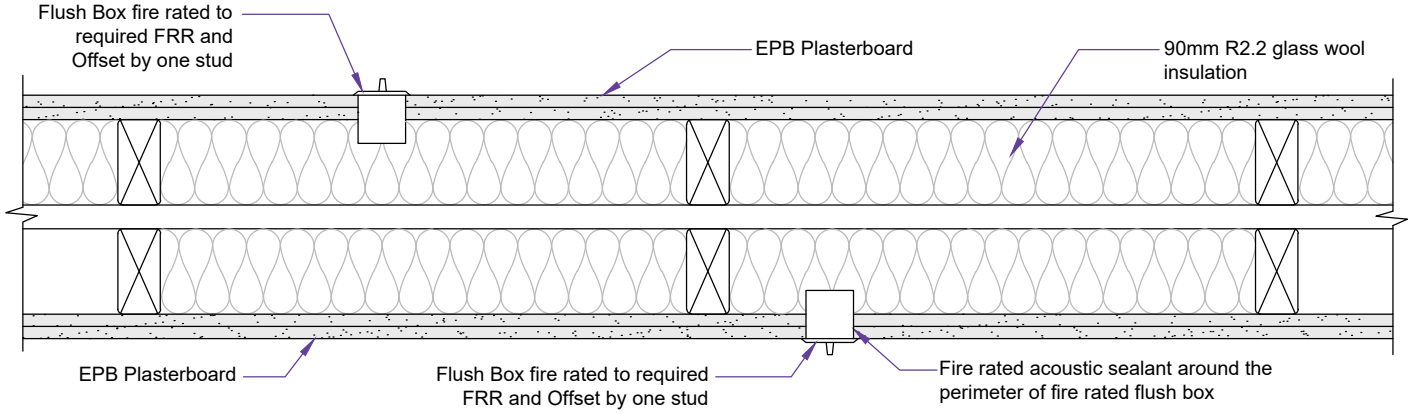

Note: Insulate both double timber stud bays where there are electrical cables and/or flush boxes

Penetration Detail

ENS-353

Flush Box Back to Back

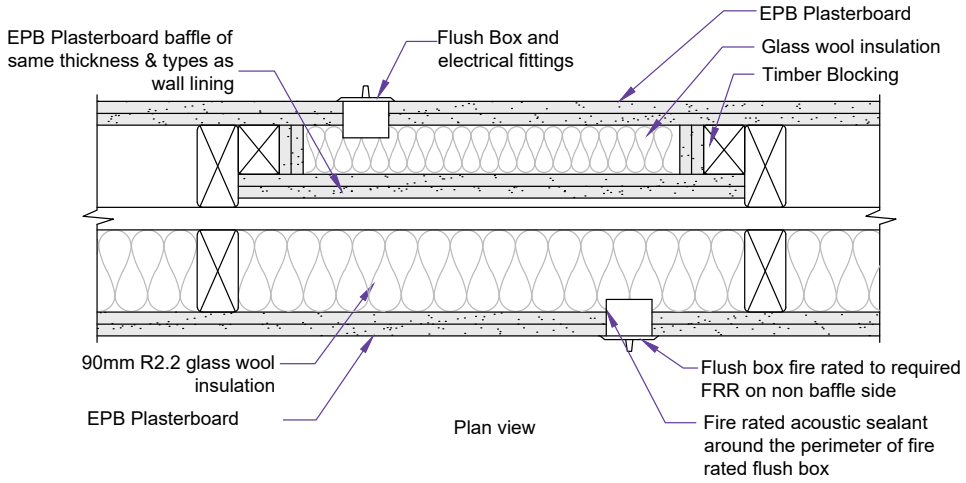

Plan view

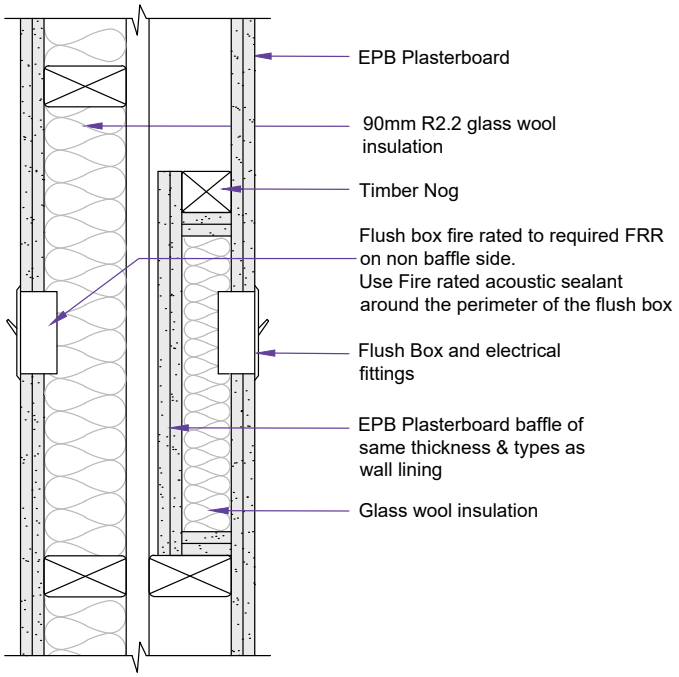

Side Elevation

Penetration Detail

ENS-354 Flush Box Offset with Quiet Stud

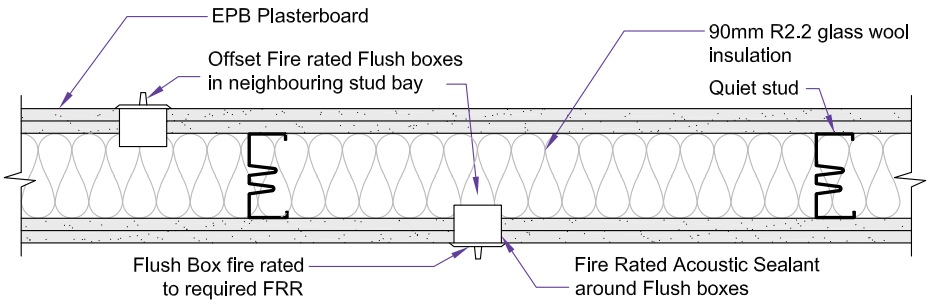

ENS-355 Metal Pipe on Double Timber Frame

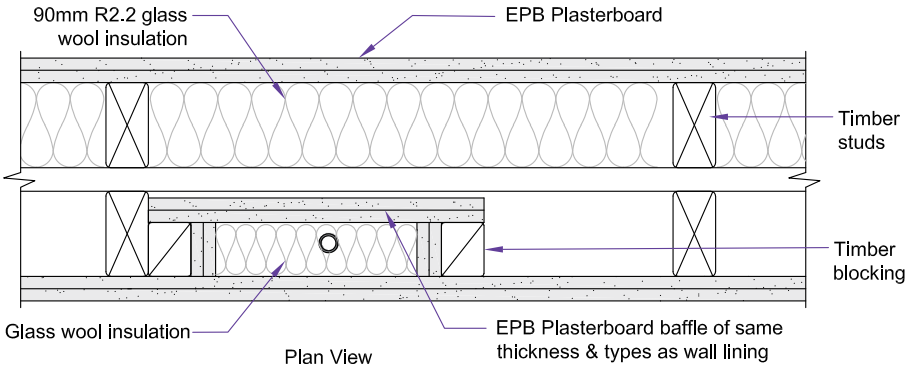

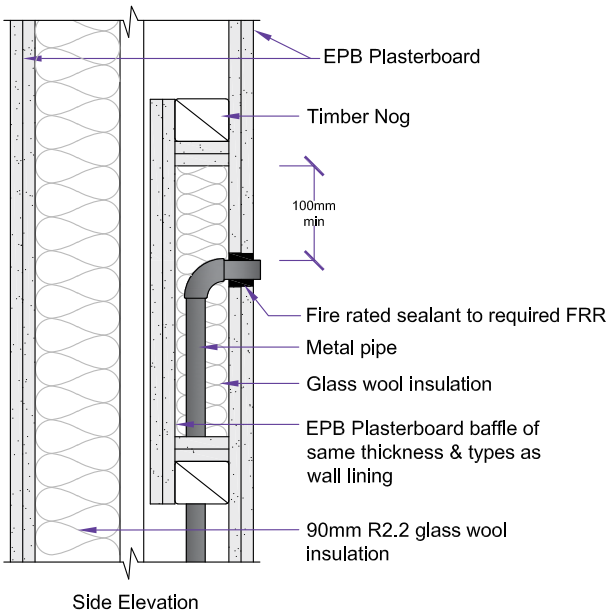

Note: Minimum 10mm gap between pipe and the baffle required

Double Timber Frame Wall Junction

ENS-005 Double Timber Frame Wall to External Wall

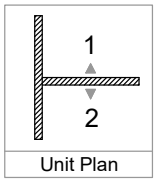

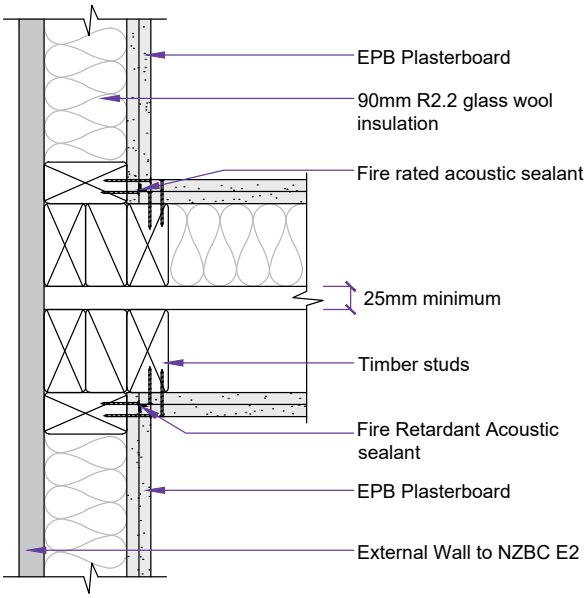

ENS-004 Double Timber Frame Wall Internal/External Corner

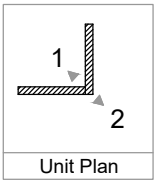

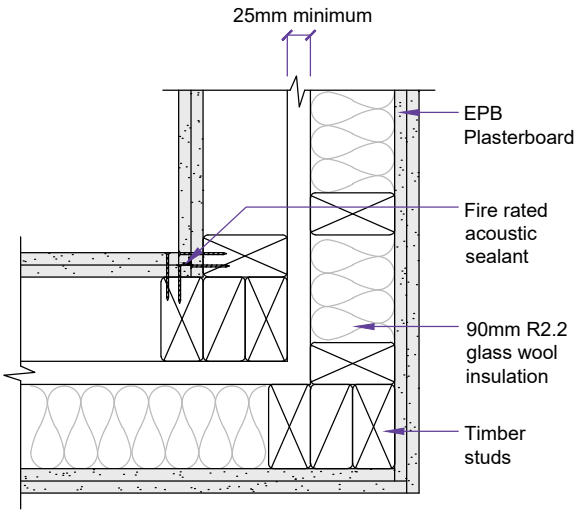

ENS-001 Double Timber Frame Wall to Double Timber Frame Wall

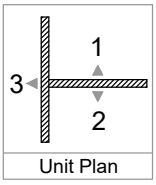

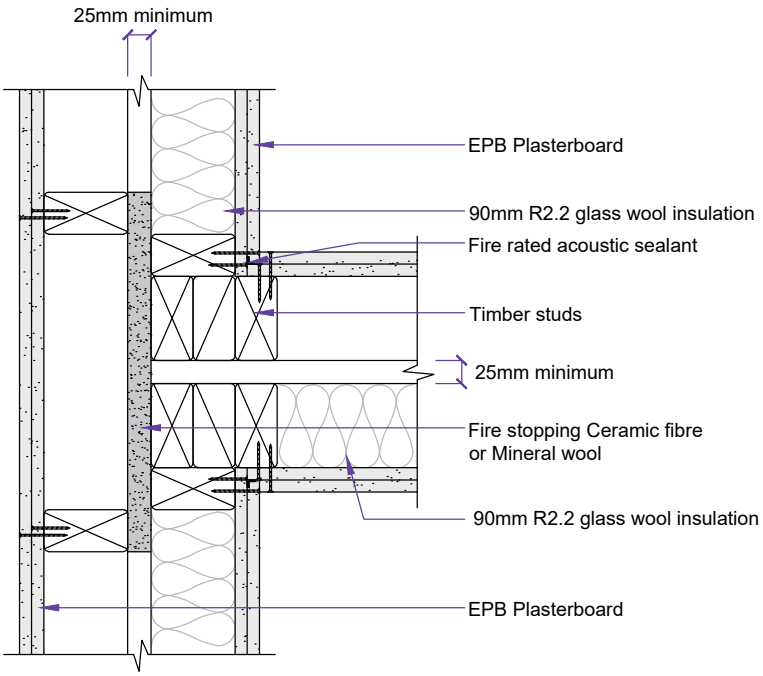

Single Timber Frame Wall to Double Timber Frame Wall Junction

ENS-002

Single Timber Frame Wall to Double Timber Frame Wall

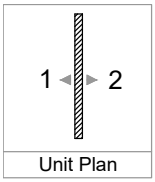

Unit Plan

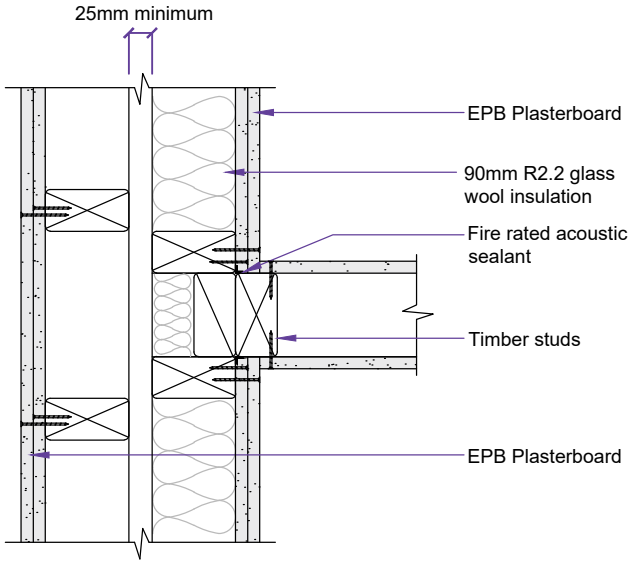

ENS-003

Single to Double Timber Frame-Double Junction

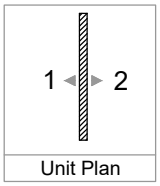

Unit Plan

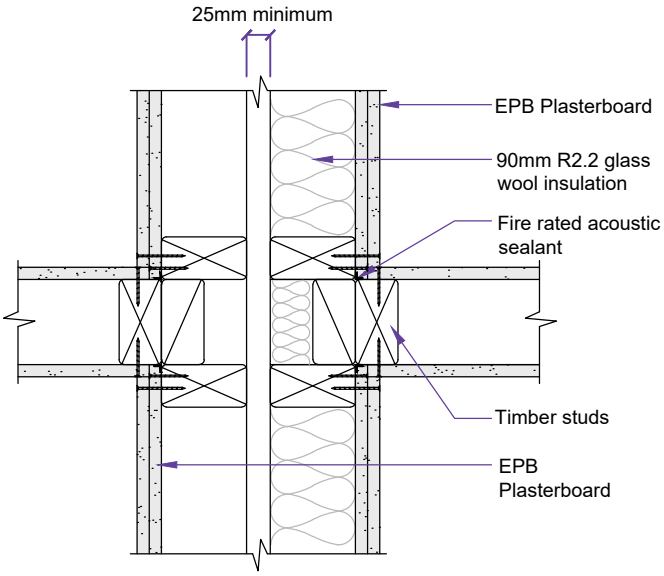

Timber Frame to External Wall Junction Detail

ENS-006

External Brick Veneer Wall Detail - Option 1

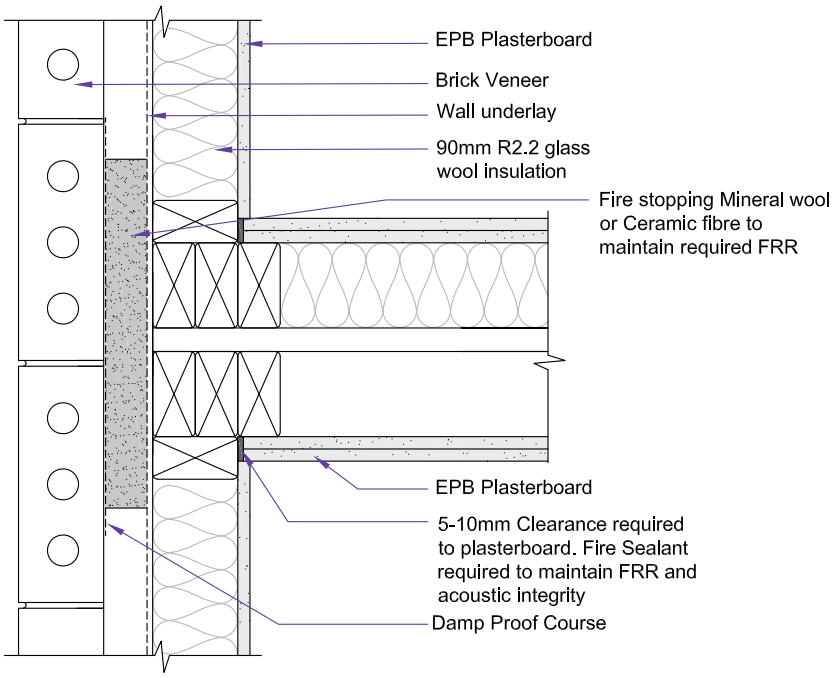

Double Timber Frame Floor/Ceiling Junction

ENS-301

Floor/Ceiling to Double Timber Frame Wall - Joists Perpendicular

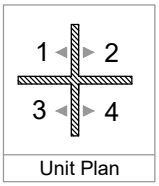

Unit Plan

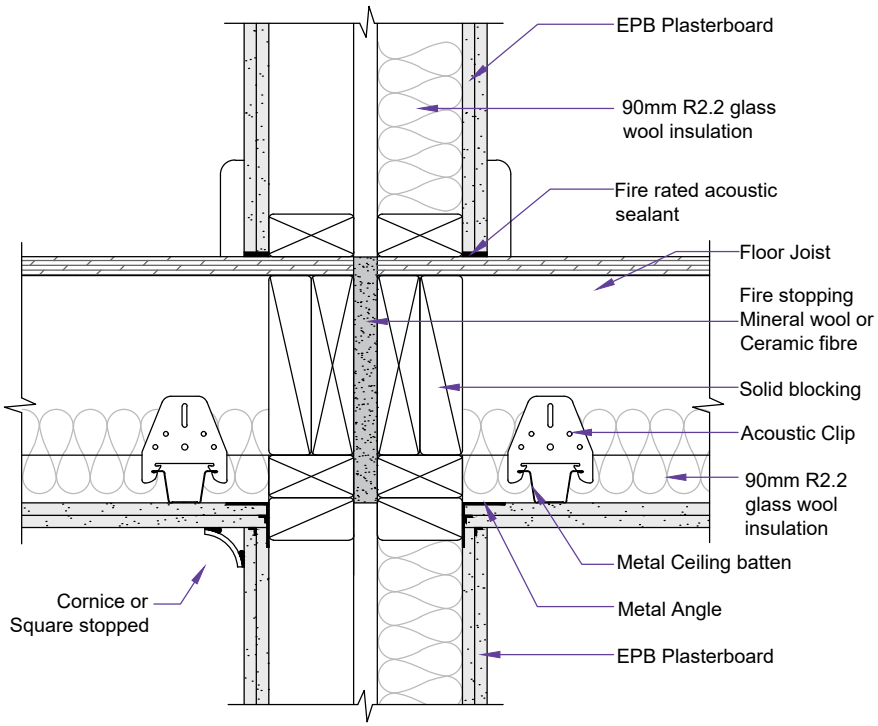

ENS-302

Floor/Ceiling to Double Timber Frame Wall - Joists Parallel to Wall over Double Frames

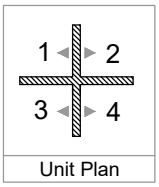

Unit Plan

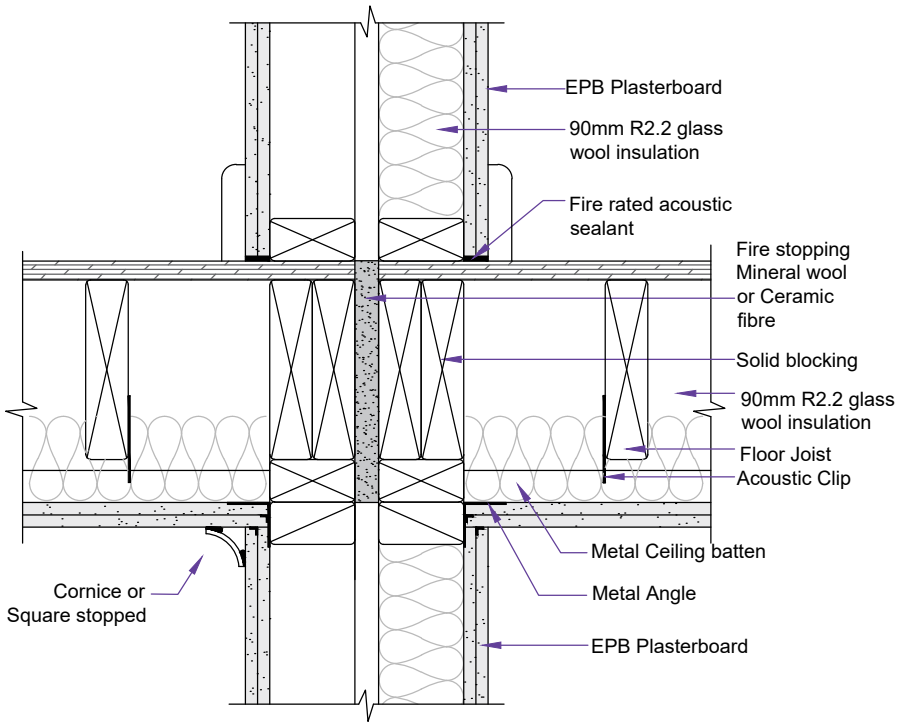

Double Timber Frame Floor/Ceiling Junction

ENS-303

Floor/Ceiling to Double Timber Frame Wall - Joists Perpendicular

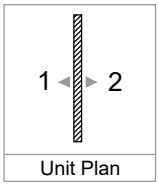

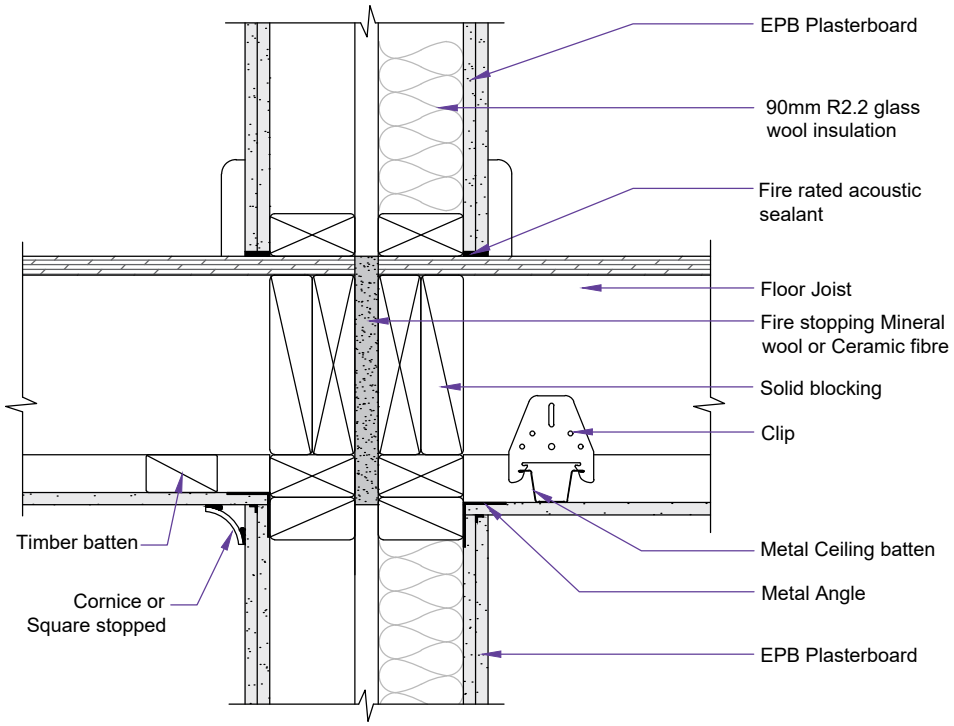

ENS-304

Floor/Ceiling to Double Timber Frame Wall - Joists Parallel

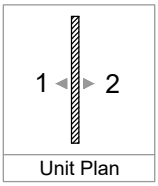

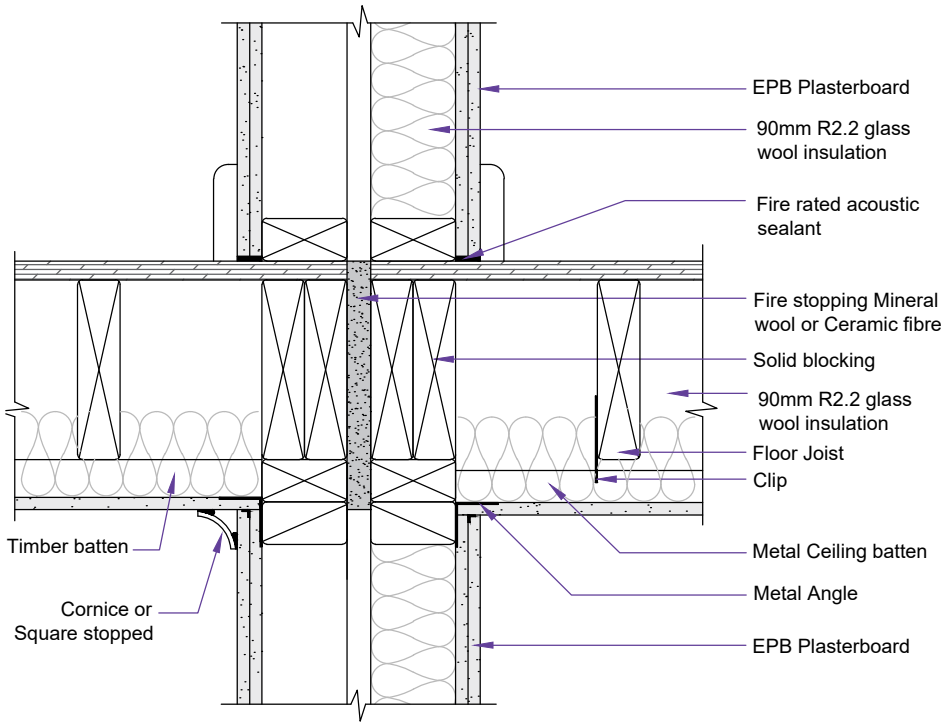

Double Timber Frame Floor/Ceiling Junction

ENS-305

Split Level Floor/Ceiling to Double Timber Frame Wall

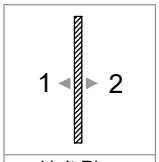

Unit Plan

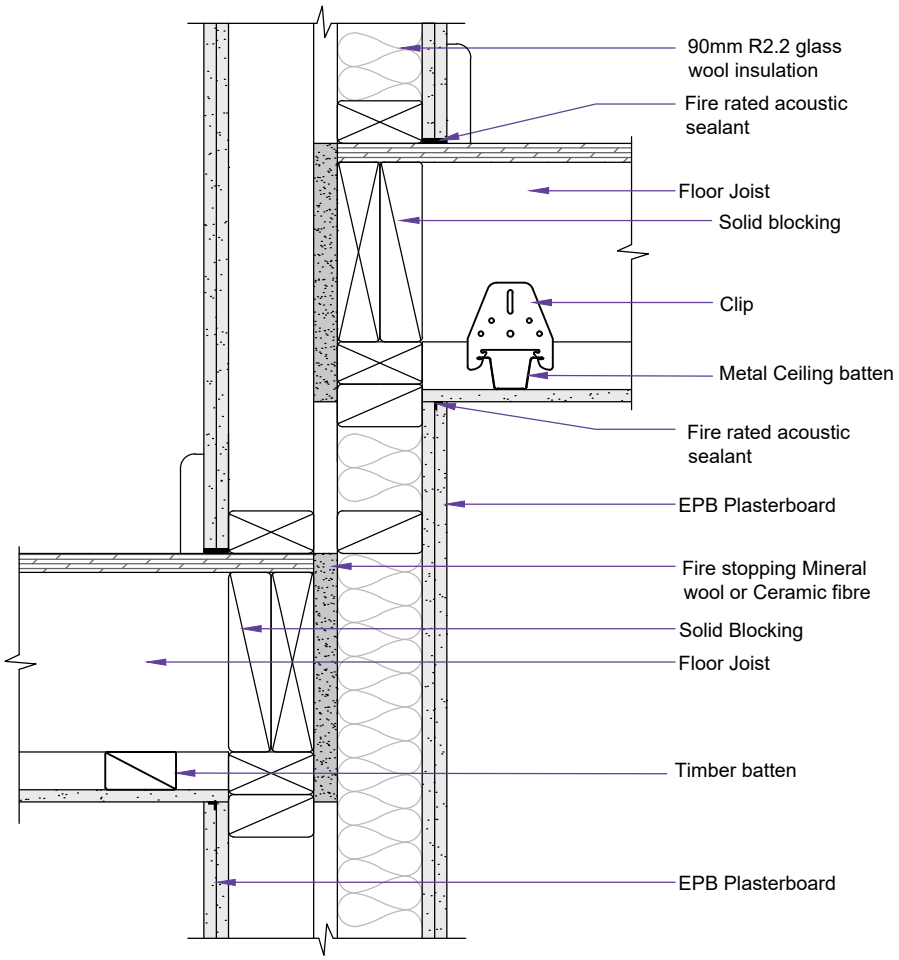

Timber Frame Floor/Ceiling Junction

ENS-306

Floor/Ceiling to External Wall-Joists parallel

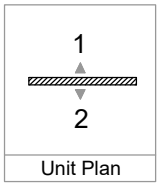

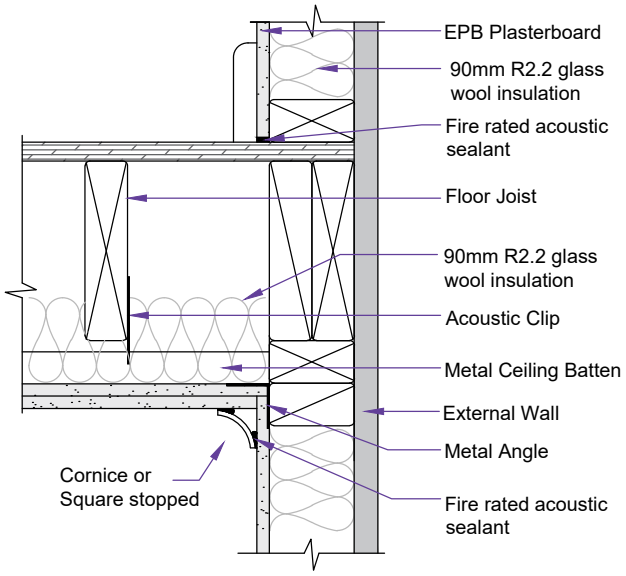

ENS-307

Floor/Ceiling to External Wall-Joists perpendicular

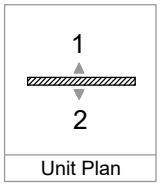

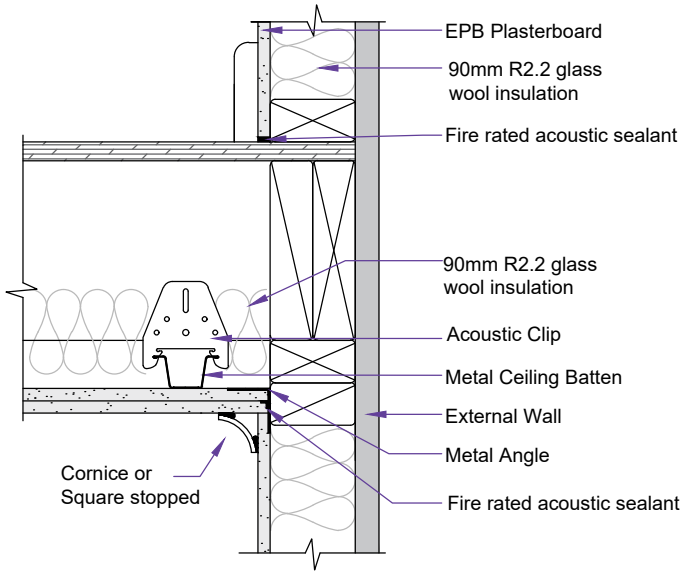

Timber Frame Floor/Ceiling Junction

ENS-308

Floor/Ceiling to Timber Frame Wall - Joists Parallel

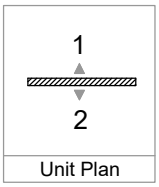

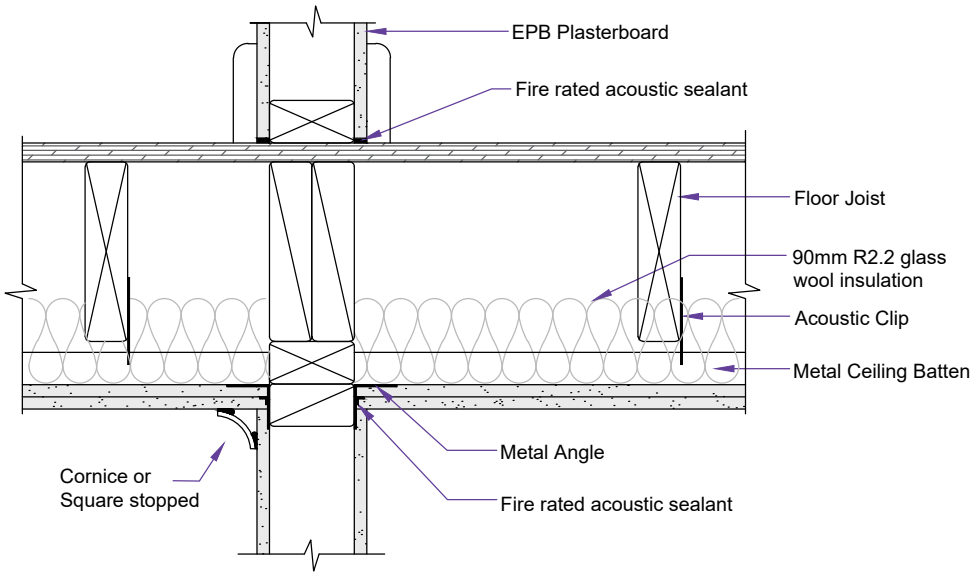

ENS-309

Floor/Ceiling to Timber Frame Wall - Joists Perpendicular

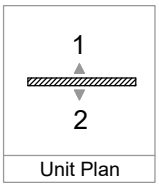

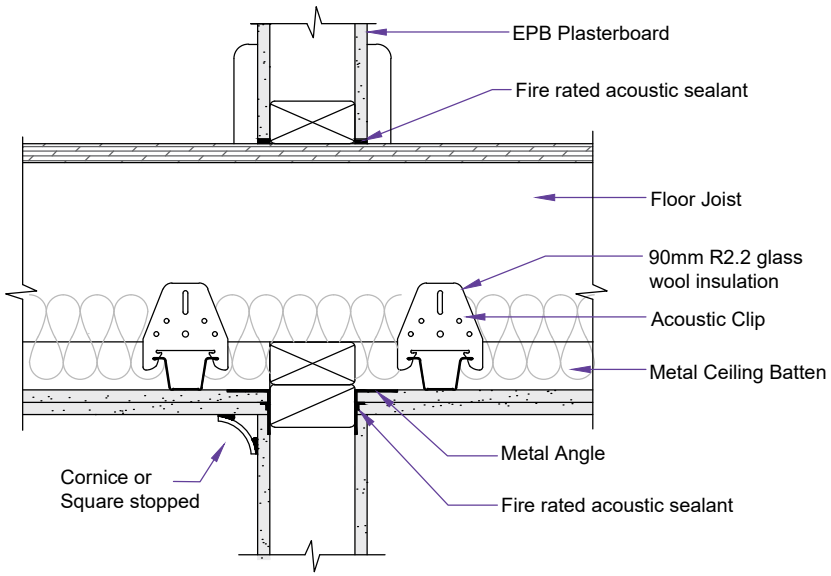

Note: Incase of simultaneous fire exposure on both sides, E2TL30S, E4TL60S or Universal wall one-way FRR systems to both sides can be used unless specific design is needed in order to maintain structural adequacy.

Timber Frame with Resilient Mount

ENS-151 Single Timber Resilient Mount Wall Internal Corner

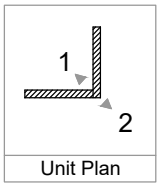

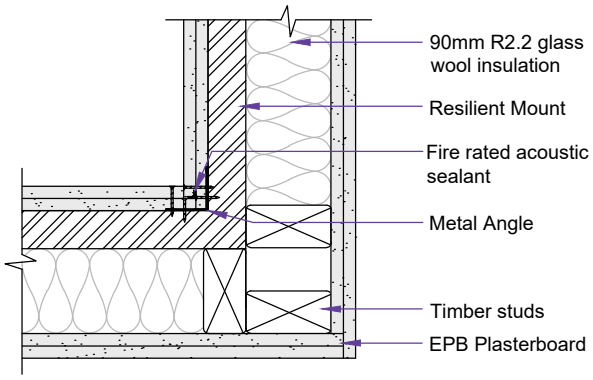

ENS-152 Single Timber Resilient Mount Wall External Corner

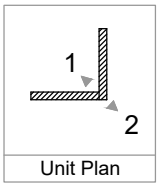

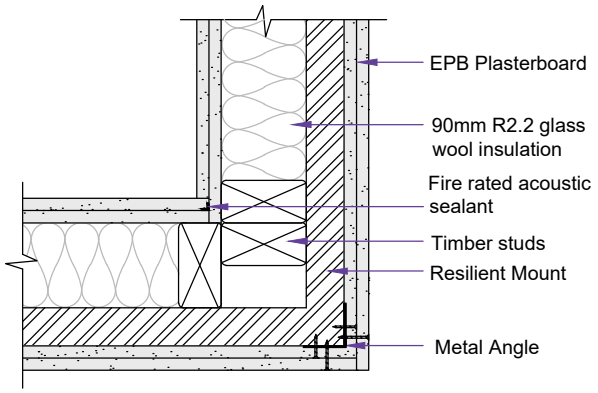

ENS-153 Single Timber Frame to Single Timber Resilient Mount

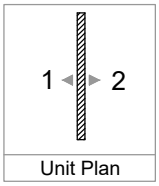

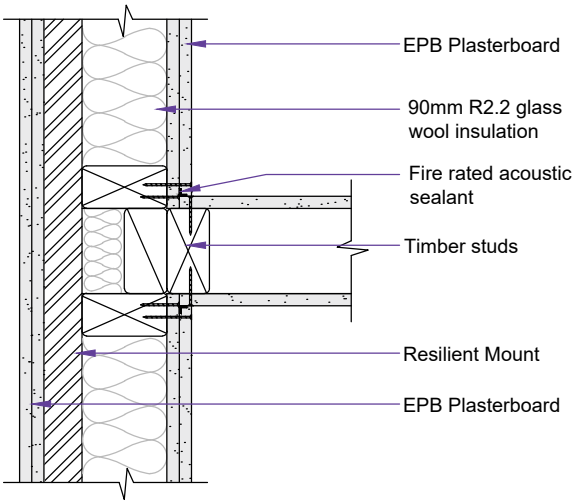

ENS-154 Single Timber Resilient Mount Wall to External Wall

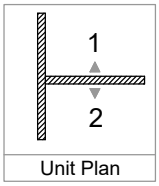

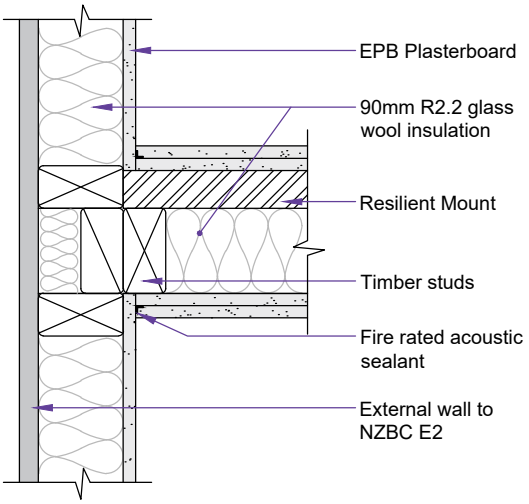

Timber Frame with Resilient Rail

ENS101 Single Timber Resilient Rail Wall Internal Corner

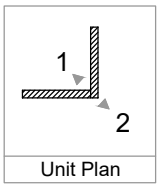

Unit Plan

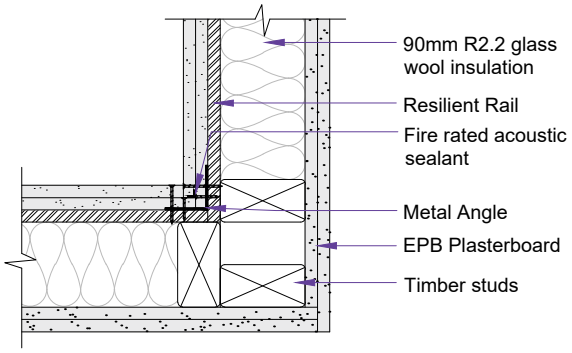

ENS-102 Single Timber Resilient Rail Wall External Corner

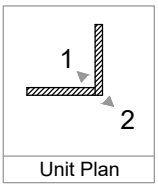

Unit Plan

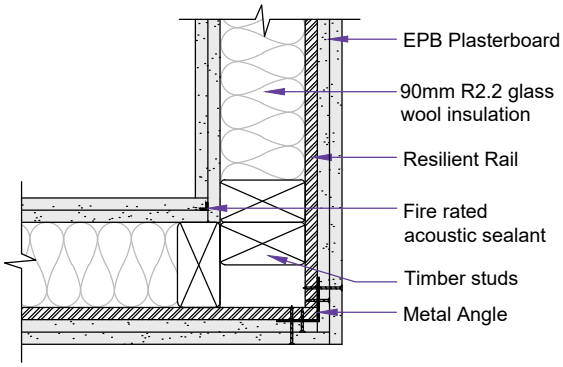

ENS-104 Single Timber Resilient Rail Wall to External Wall

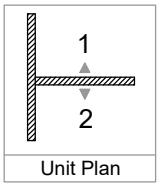

Unit Plan

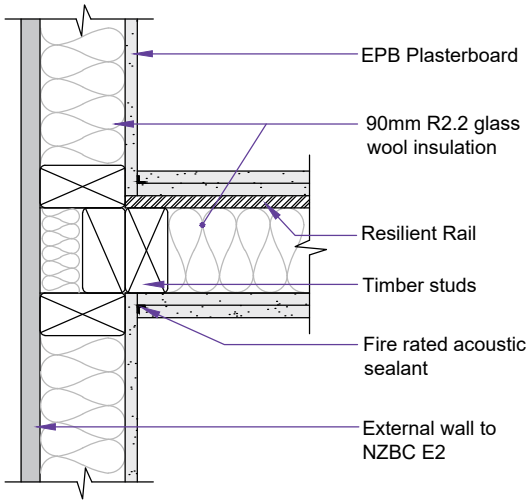

Timber Frame with Resilient Rail

ENS-103

Single Timber Frame to Single Timber Resilient Rail Wall

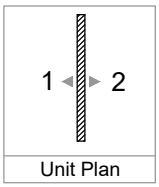

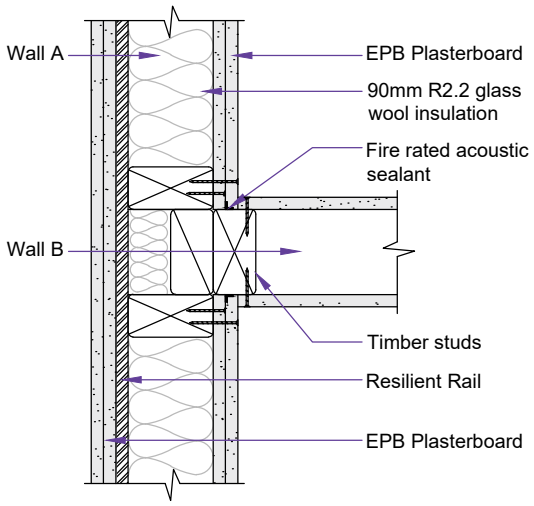

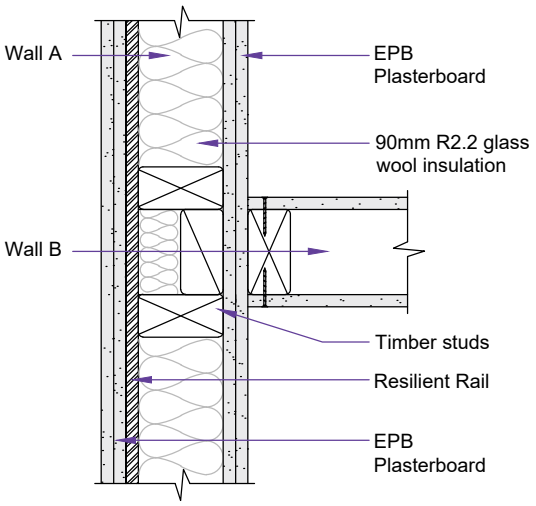

Note: The double linings of wall A must continue through if the FRR of the wall A is more than 30 minutes greater than the FRR of the wall B as shown here

ENS-105

Double Junction: Single Timber Frame Wall to Single Timber Resilient Rail Wall

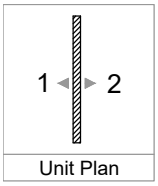

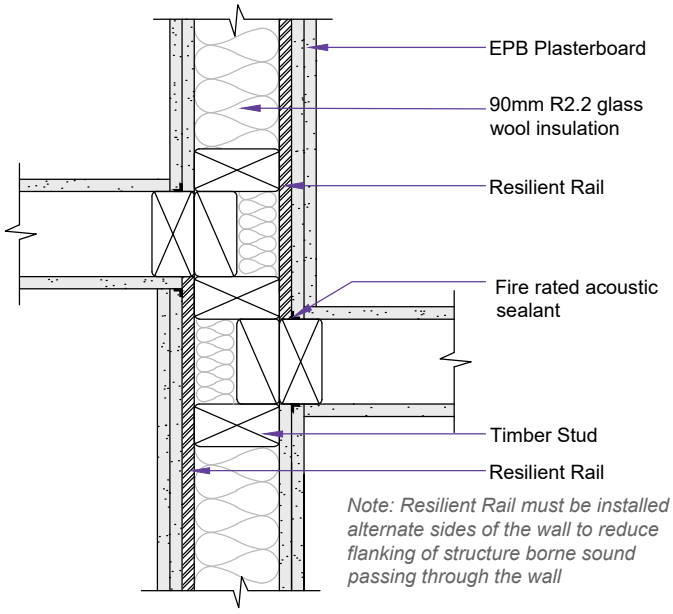

Note: Resilient Rail must be installed on alternate sides of the wall to reduce flanking of structure borne sound passing through the wall

Double Steel Frame Wall Junction

ENS-053

Double Steel Frame Wall to Concrete Masonry

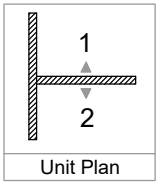

Unit Plan

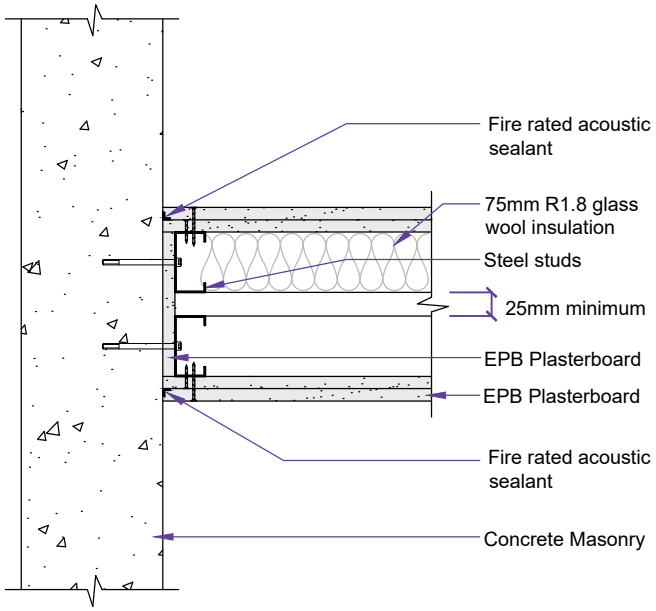

ENS-051

Double Steel Frame Wall to Double Steel Frame Wall

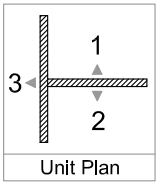

Unit Plan

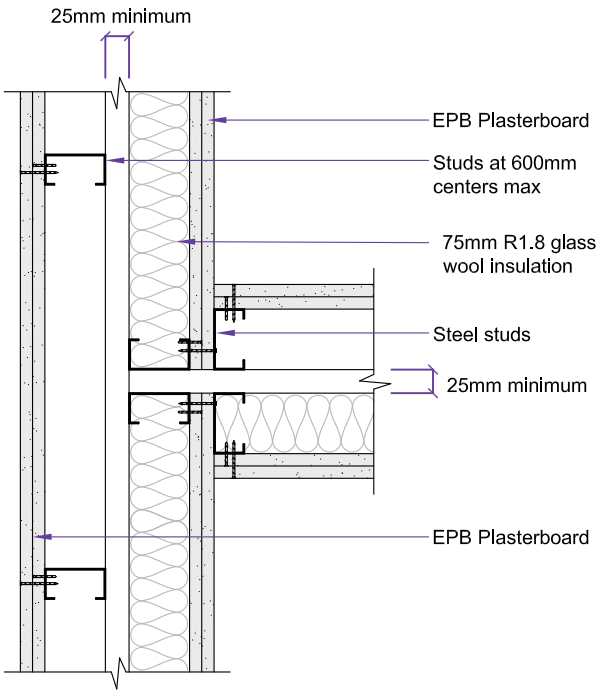

Single Steel Frame Wall

ENS-052

Single Steel Frame Wall to Double Steel Frame Wall

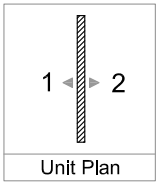

Unit Plan

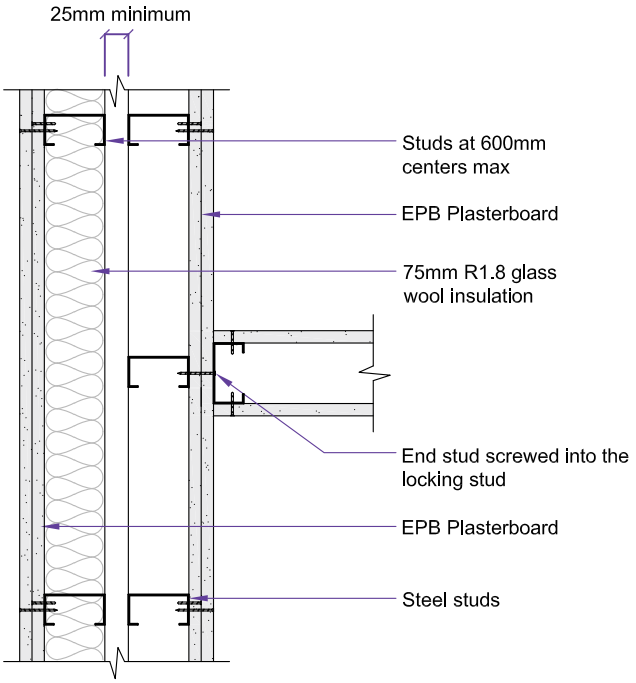

Steel Frame with Resilient Rail

ENS-121 Single Steel Resilient Rail Wall Internal Corner

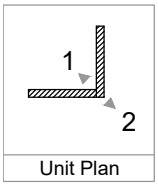

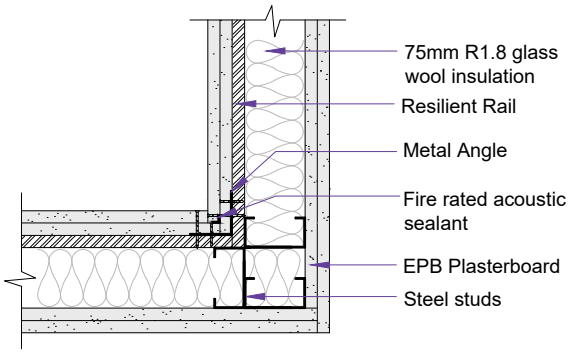

ENS-122 Single Steel Resilient Rail Wall External Corner

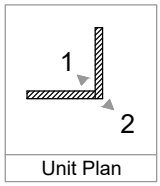

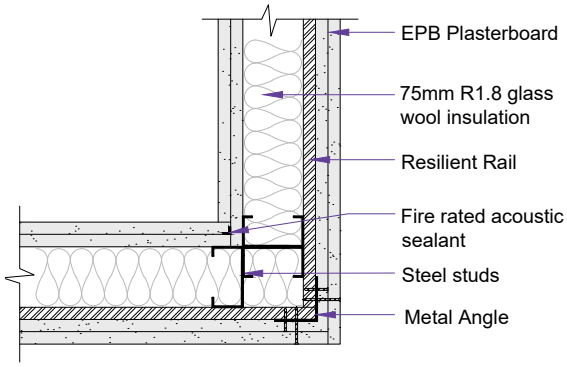

ENS-123 Single Steel Resilient Rail to External Wall

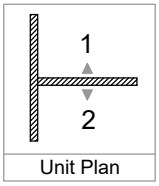

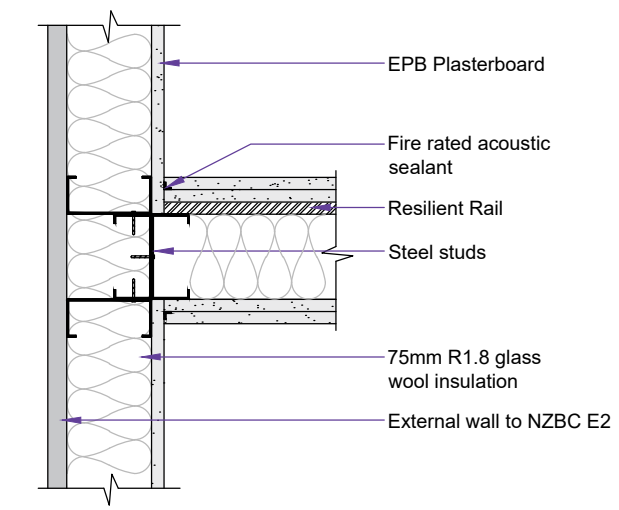

ENS-120 Single Steel Frame Wall to Single Steel Resilient Rail Wall

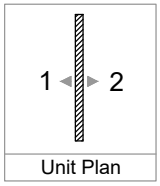

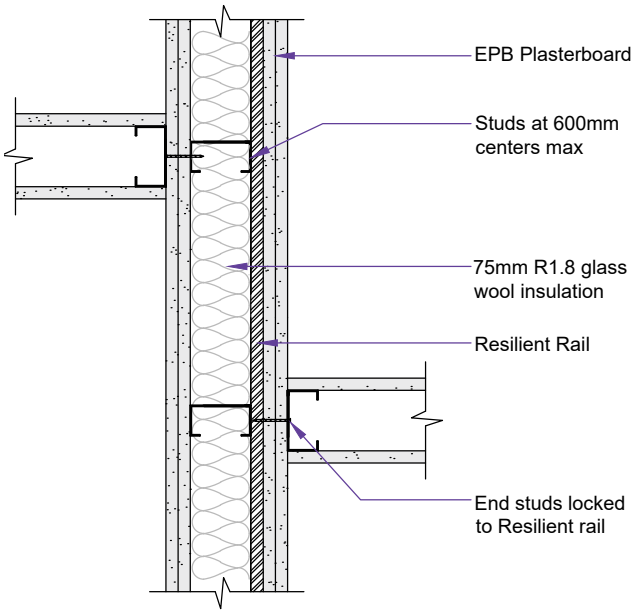

Steel Frame with Resilient Mount

ENS-171 Single Steel Resilient Mount Wall Internal Corner

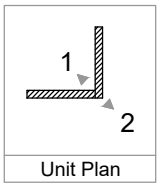

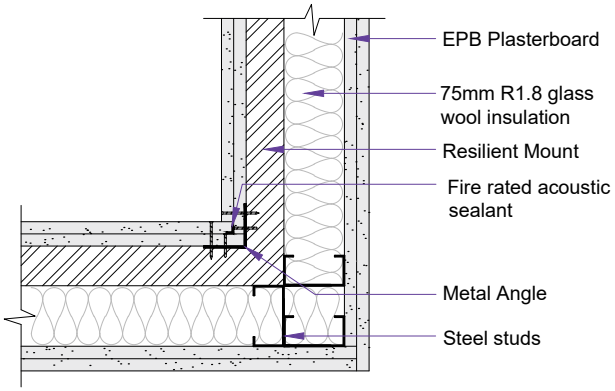

ENS-172 Single Steel Resilient Mount Wall External Corner

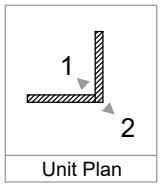

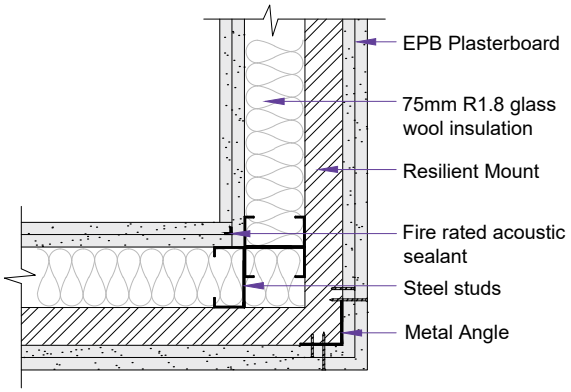

ENS-170 Single Steel Frame Wall to Single Steel Resilient Mount

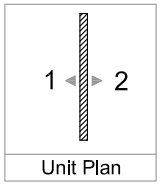

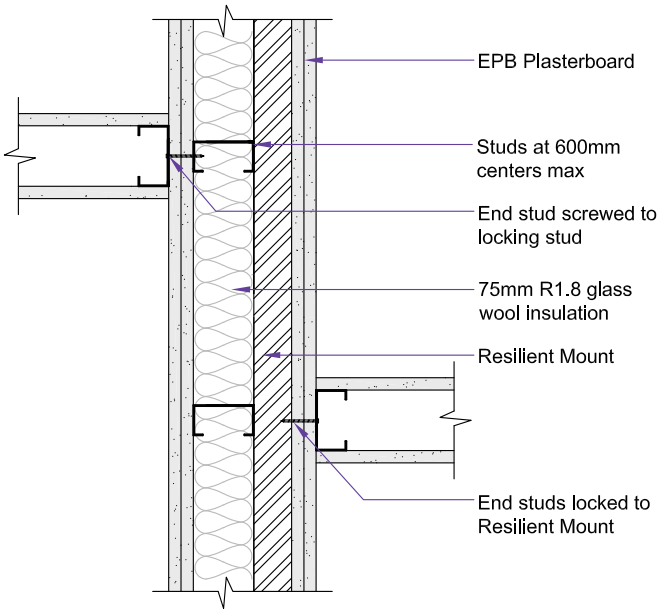

Quiet Stud

ENS-201 Quiet Stud-T intersection

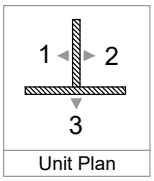

Unit Plan

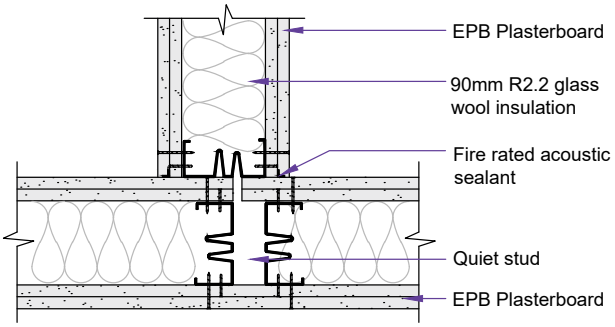

ENS-202 Quiet Stud Corner Detail

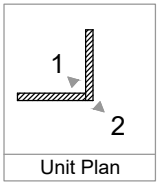

Unit Plan

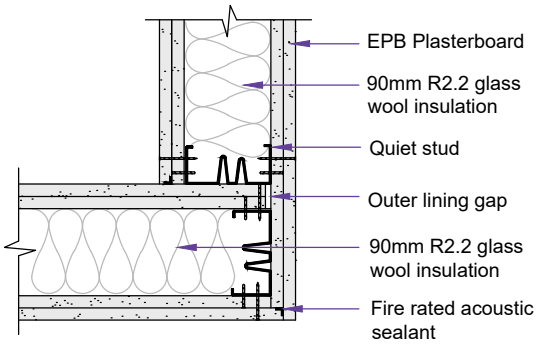

ENS-203 Quiet Stud-Bottom Track Detail

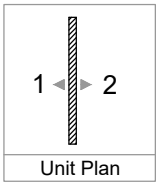

Unit Plan

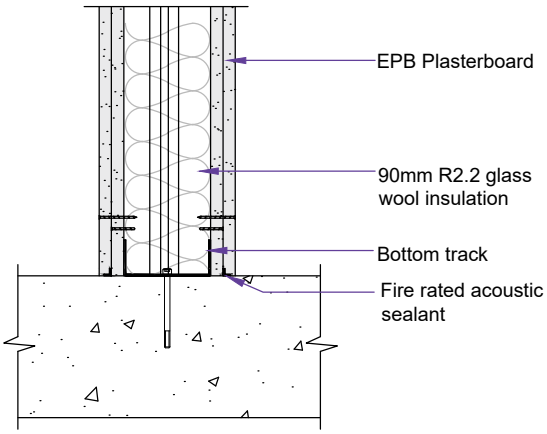

Quiet stud

ENS-205

Quiet Stud - Head Detail - Type 1

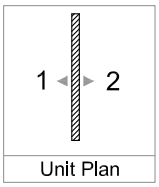

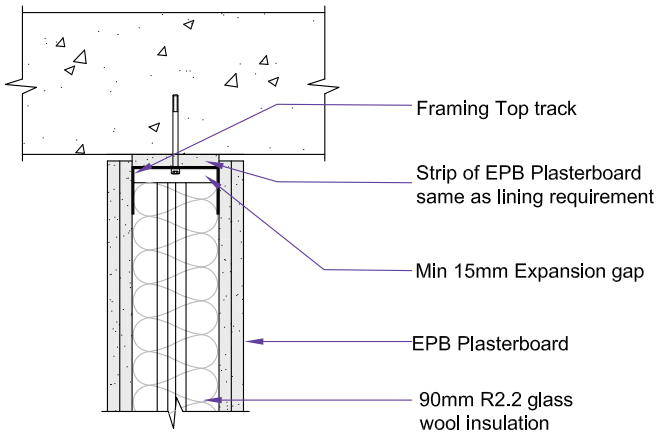

For Negligible Deflection

ENS-206

Quiet Stud - Head Detail - Type 2

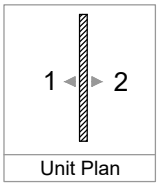

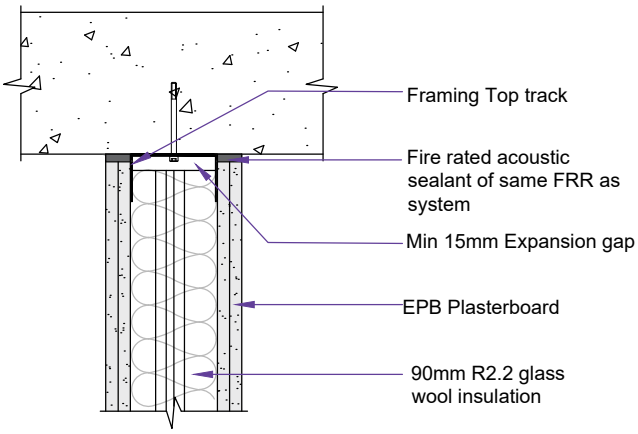

For Negligible Deflection

Quiet stud with Timber Nog Detail

ENS-208

Plan view

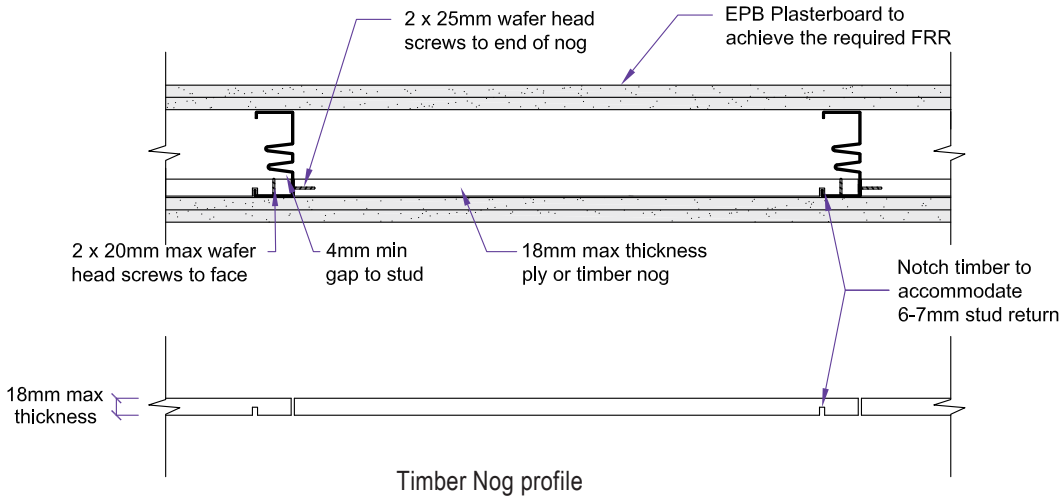

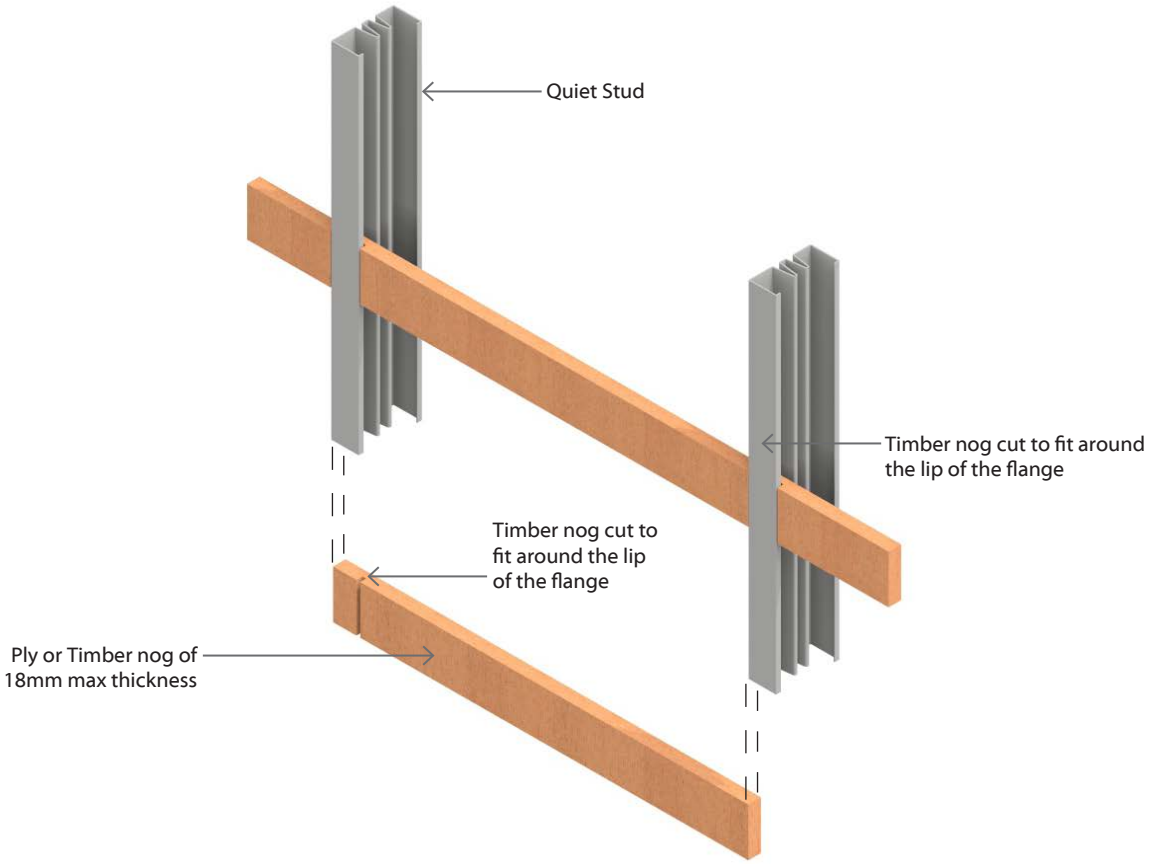

Quiet stud with Steel Nog Detail

ENS-207

Plan view

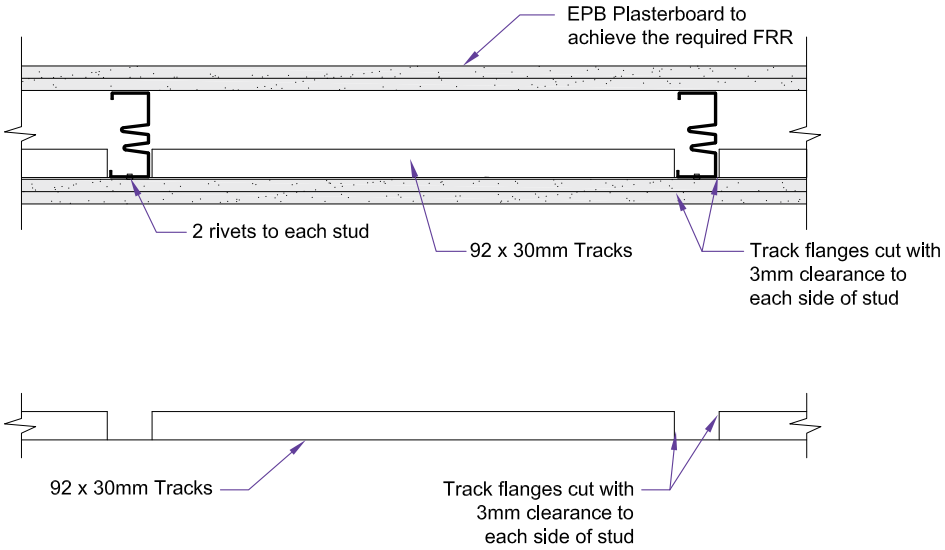

Metal track profile

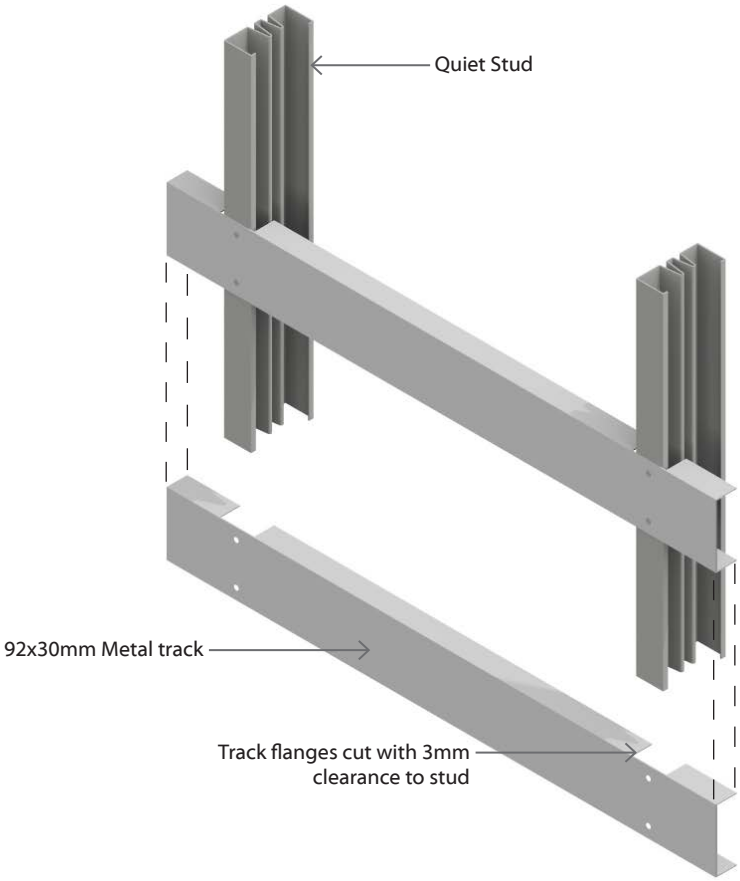

Deflection Head Detail

ENS-008

Double Timber Frame Wall Deflection Head Detail

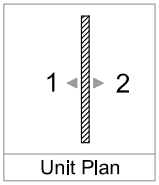

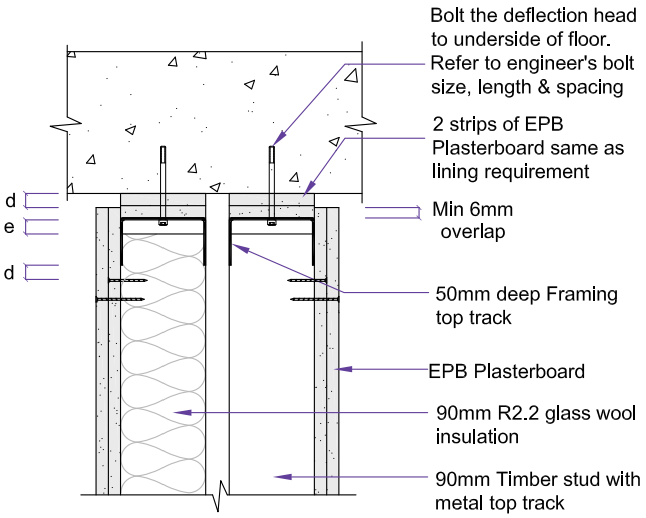

d = deflection
e = expansion gap is the greater of 15mm or d

ENS-009

Double Timber Frame Wall Deflection Head - Type 2

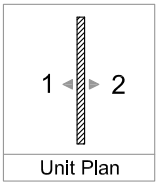

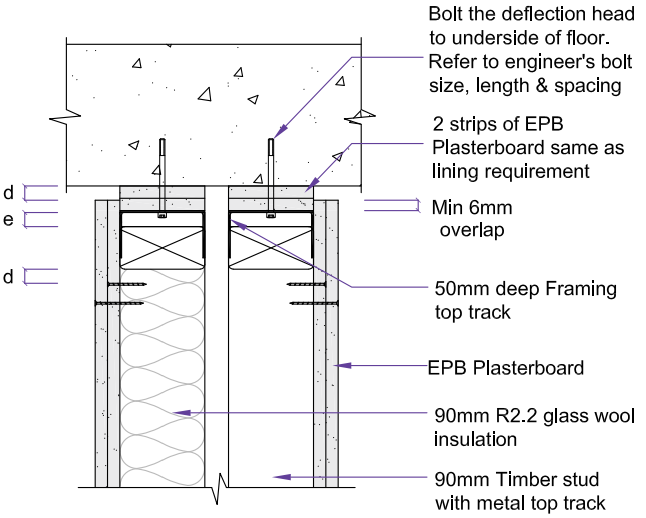

d = deflection
e = expansion gap is the greater of 15mm or d

Deflection Head Detail

ENS-054 Double Steel Frame Wall Deflection Head Detail

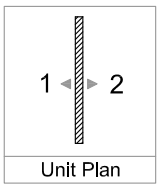

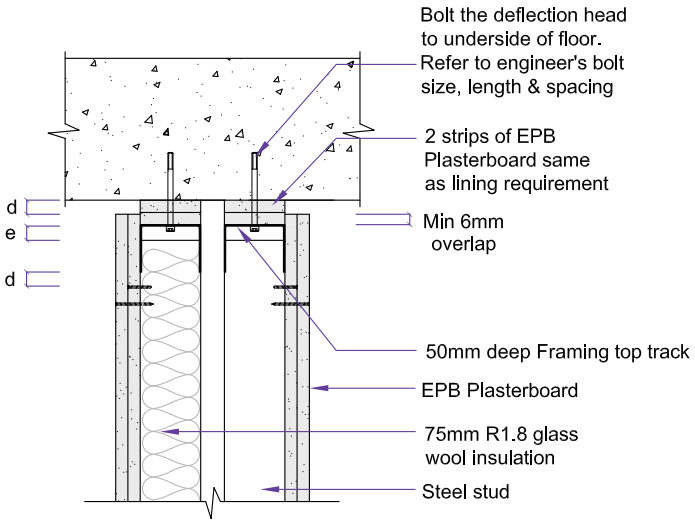

d = deflection
e = expansion gap is the greater of 15mm or d

ENS-204 Quiet Stud-Deflection Head Detail

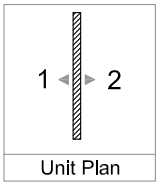

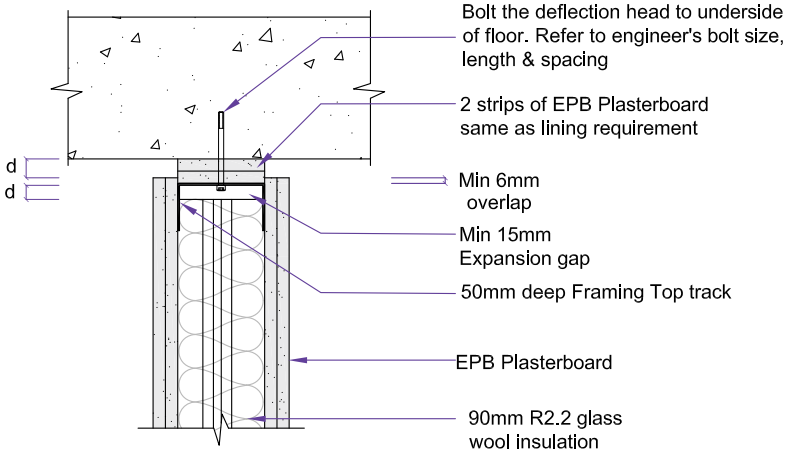

d = deflection

Composite Floor Deflection Head Detail

ENS-401

Wall to Profile Junction - Option 1

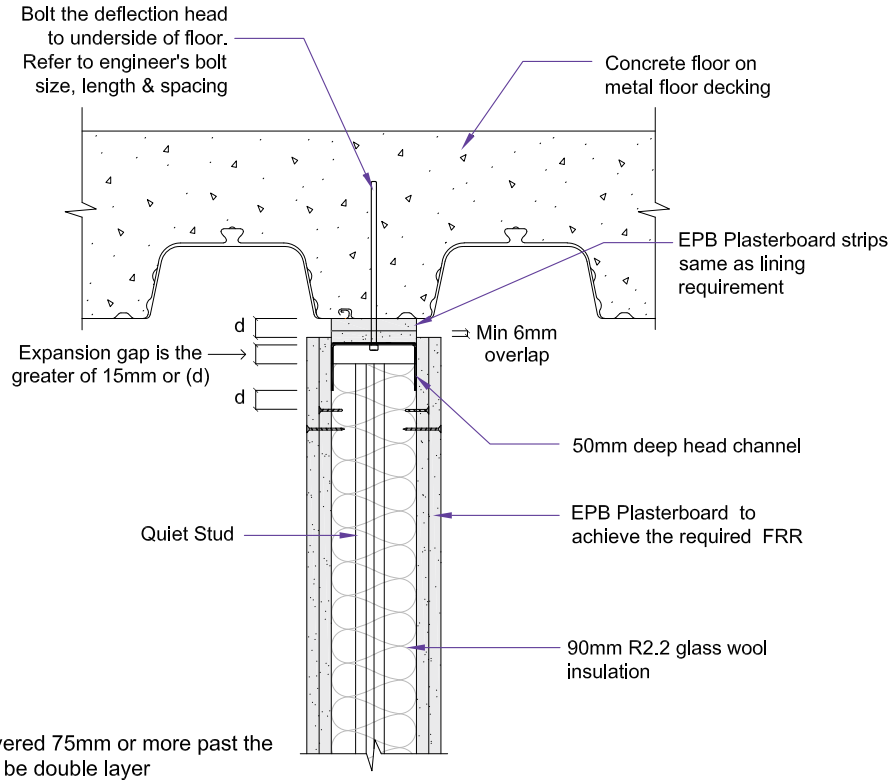

d = Deflection

Note: If Plasterboard is cantilevered 75mm or more past the top screw then wall lining must be double layer

NOTE: Maximum 60 mins Fire system only. For higher fire rating requirements, contact Elephant Plasterboard (NZ) Ltd. at 0800 353 742

ENS-402

Wall to Profile Junction - Option 2

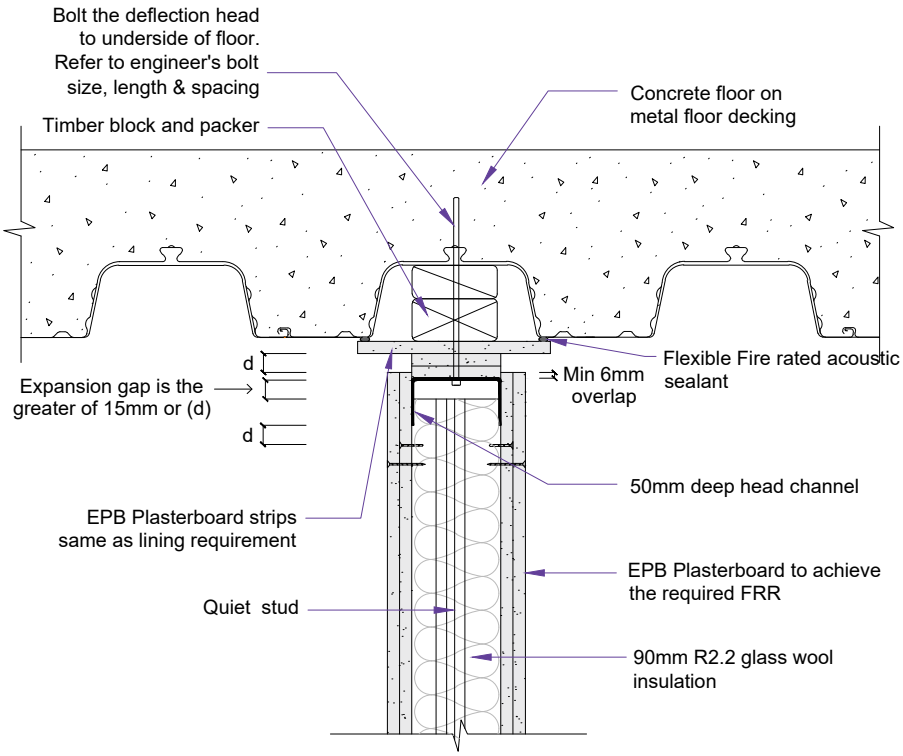

d = Deflection

Note: If Plasterboard is cantilevered 75mm or more past the top screw then wall lining must be double layer

NOTE: Maximum 60 mins Fire system only. For higher fire rating requirements, contact Elephant Plasterboard (NZ) Ltd. at 0800 353 742

Roof Cavity Detail

ENS-316

Fire Rated Wall to Roof Cavity Detail-Double Frame - Option 1

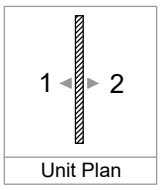

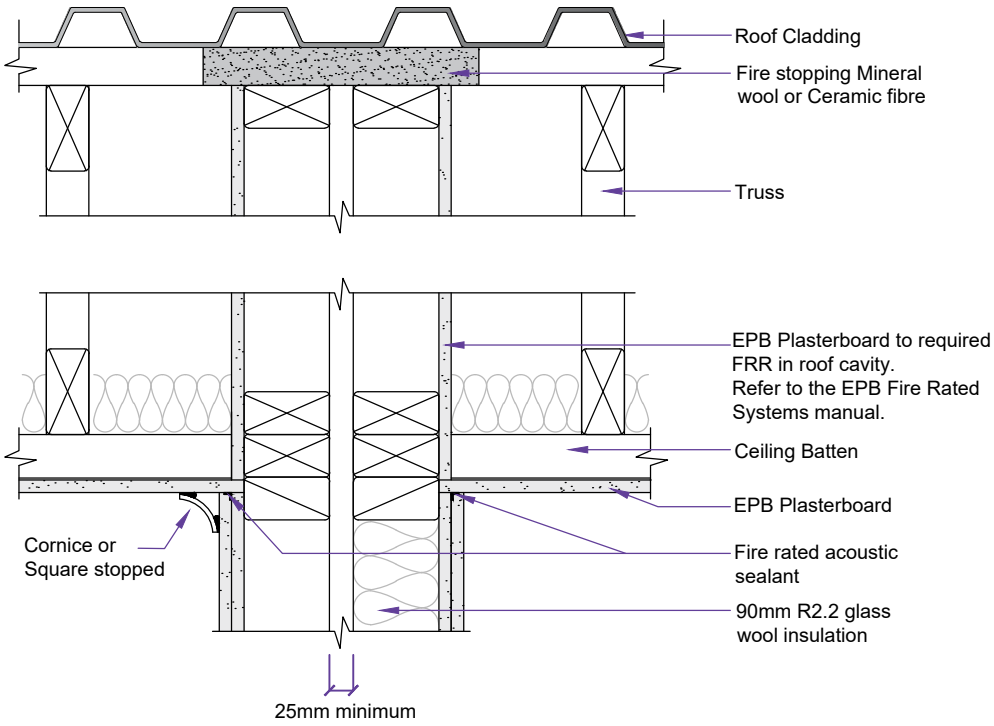

ENS-317

Fire Rated Wall to Roof Cavity Detail-Double Frame - Option 2

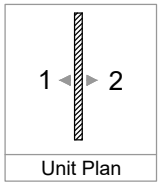

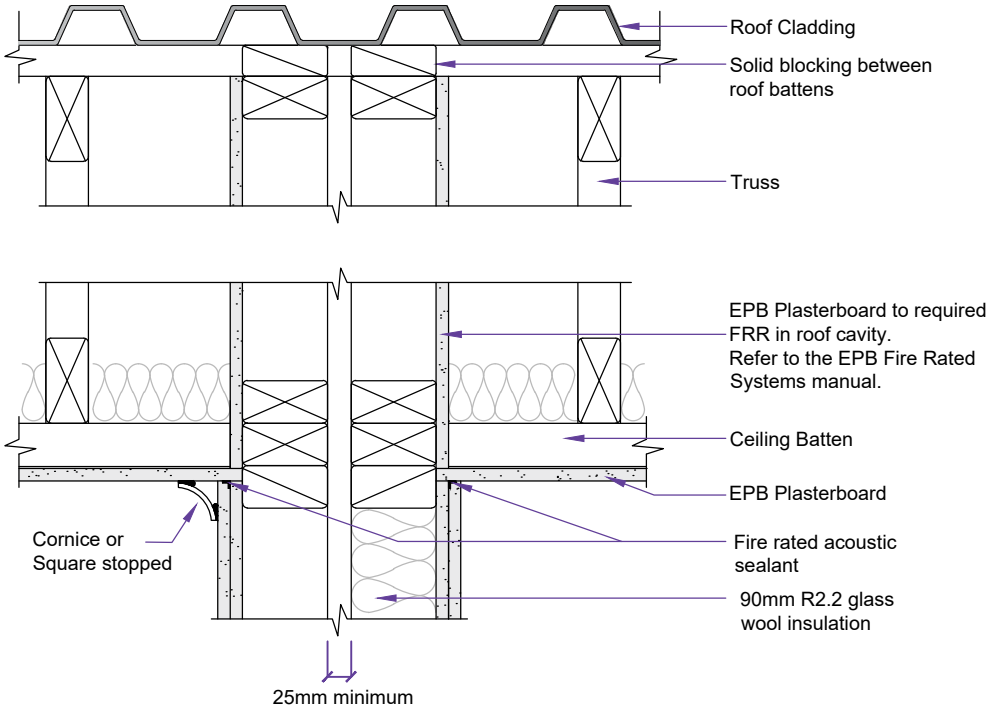

Roof Cavity Detail

ENS-315

Fire Rated Wall to Roof Cavity Detail-Single Frame

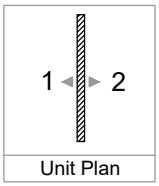

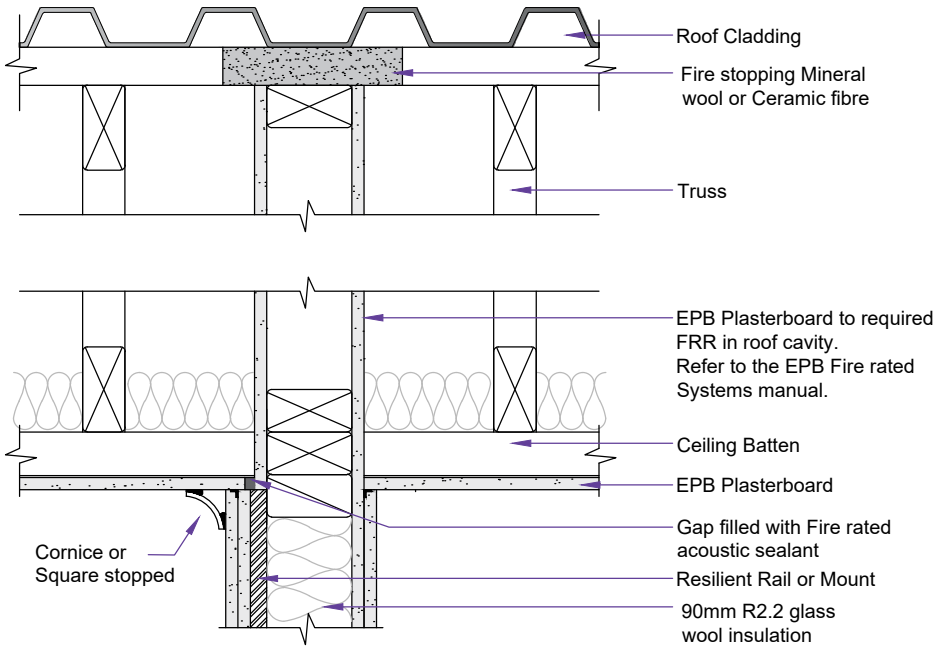

Roof Cavity Detail

ENS-318

Fire Rated Wall to Roof Cavity Detail-Double Frame - Truss perpendicular to wall

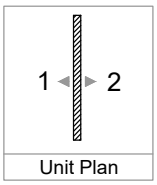

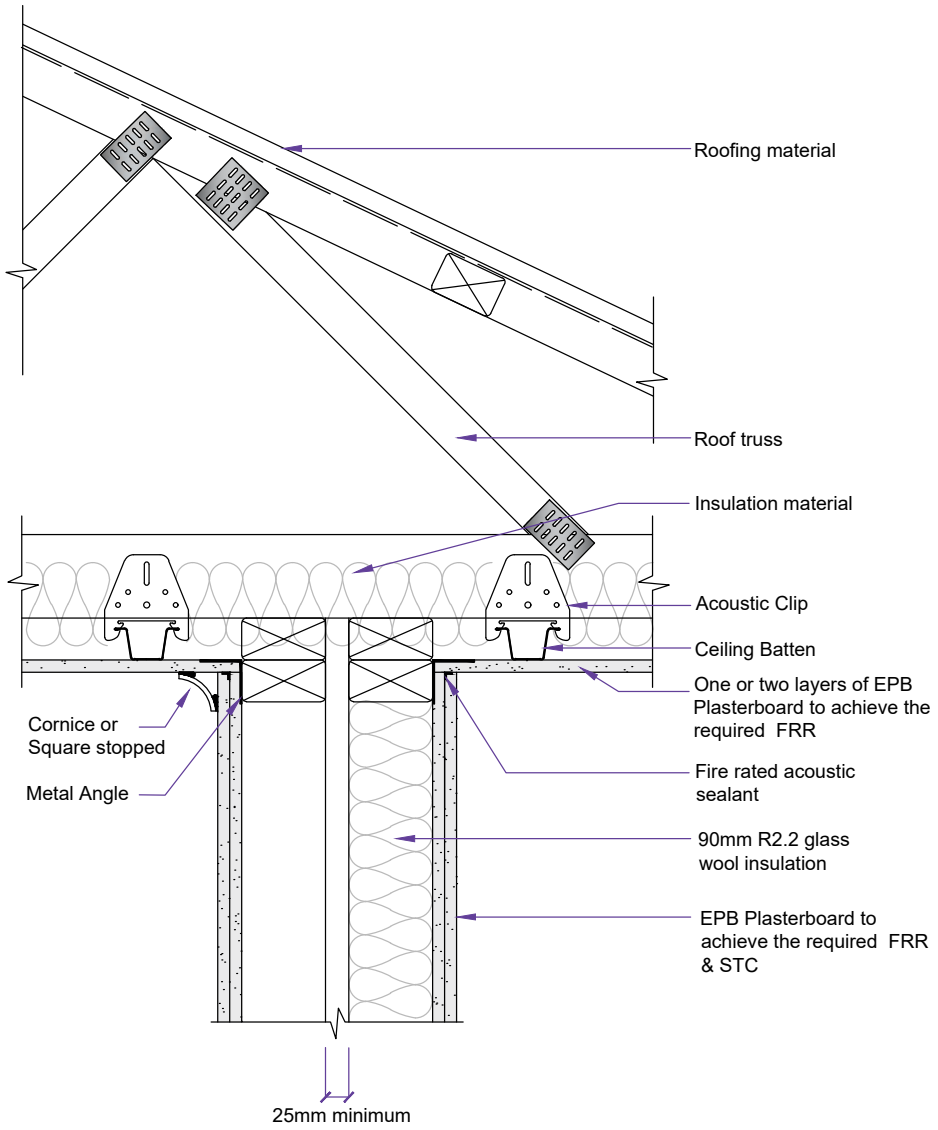

Rail and Mount Installation Details

ENS-124

Stud and Resilient Rail Installation Details

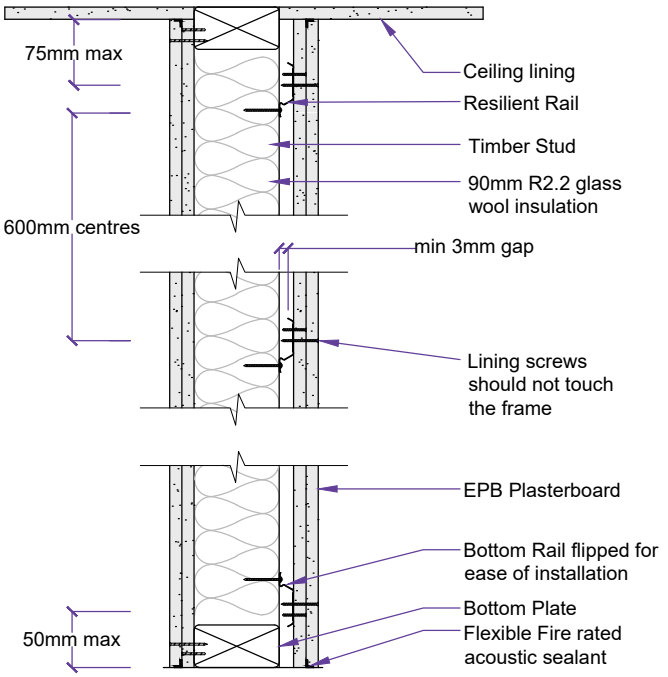

ENS-173

Stud and Resilient Mount Installation Detail

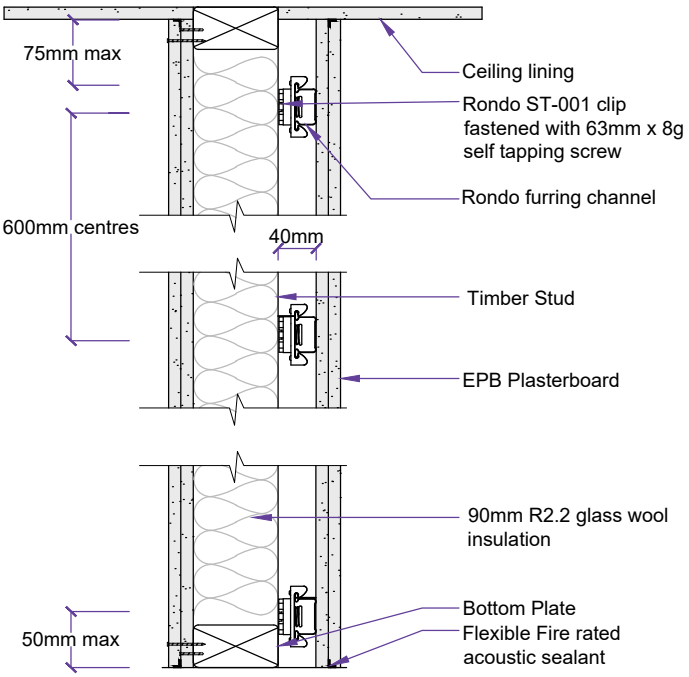

Ceiling Perimeter Details

ENS-310

Suspended Ceiling Detail

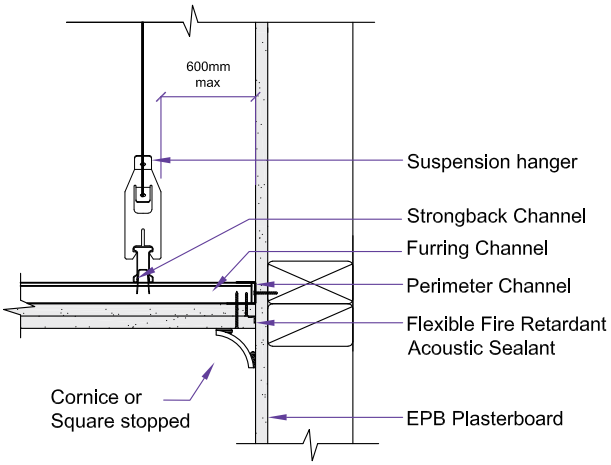

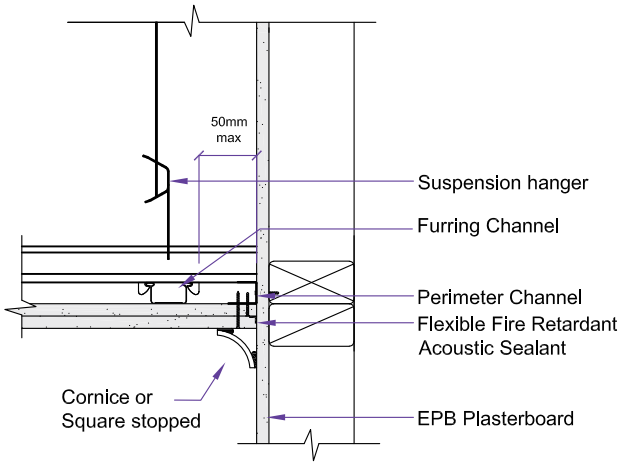

ENS-112

Direct Fix Clip Ceiling

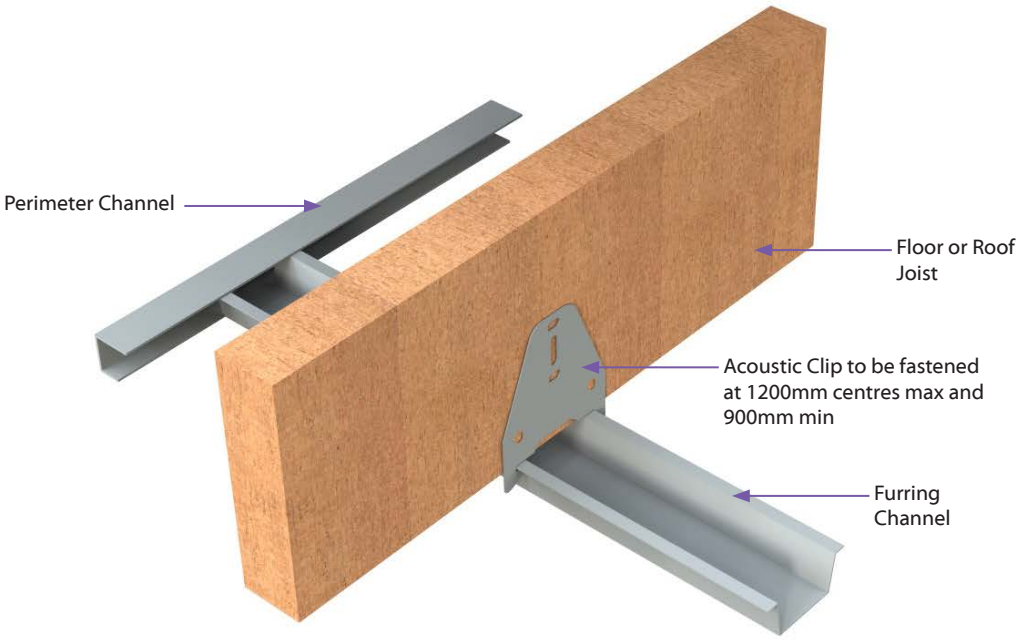

System Components

Ceiling Batten

Rondo® 310 ceiling batten provides a more stable substrate for fixing ceiling lining which is also compatible with the Acoustic Clip

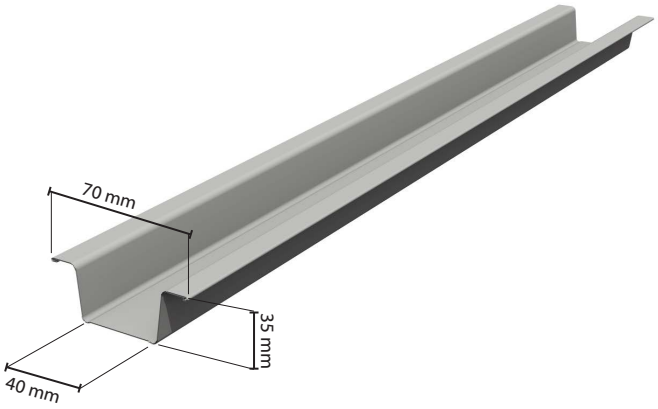

Acoustic Clip*

Rondo® 311D optimises acoustic performance of EPB Noise Control systems. It is compatible with Rondo® 310 ceiling batten.

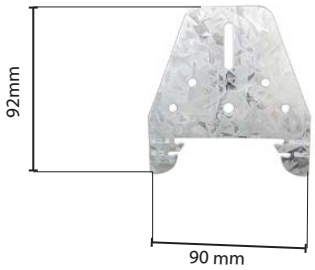

*The allowable alternatives for the Rondo® 311D Acoustic clips for EPB Noise Control Systems are Rondo® 313, Rondo® 226, Rondo® 394 and GIB Quiet Clip®

Acoustic Resilient Mount

Rondo® STWC for use with wall & ceiling construction assemblies to prevent sound & vibration transmission to improve STC and IIC ratings of single framed timber or steel EPB Noise Control systems. It is compatible with Rondo® 308 & Rondo® 129.

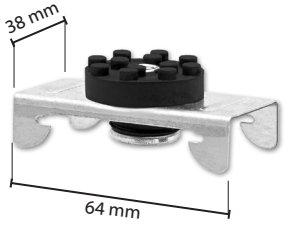

*The allowable alternatives for the Rondo® STWC Acoustic Resilient Mount for EPB Noise Control Systems is ST-001

Perimeter Angle

Rondo®18 Perimeter angle is a componentary part of the EPB Noise Control ceiling system.

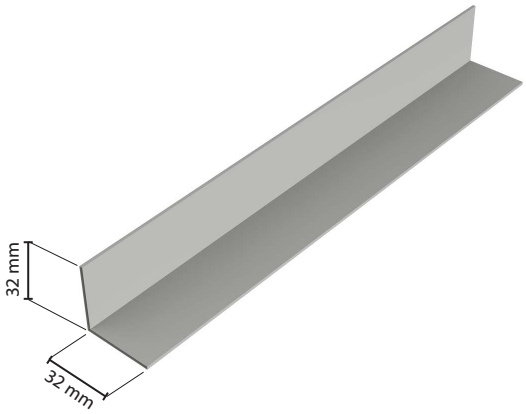

Perimeter Channel*

Rondo® 340 is designed to provide seamless support at wall ends of suspended ceiling systems. It is compatible with Rondo® 310 Ceiling batten.

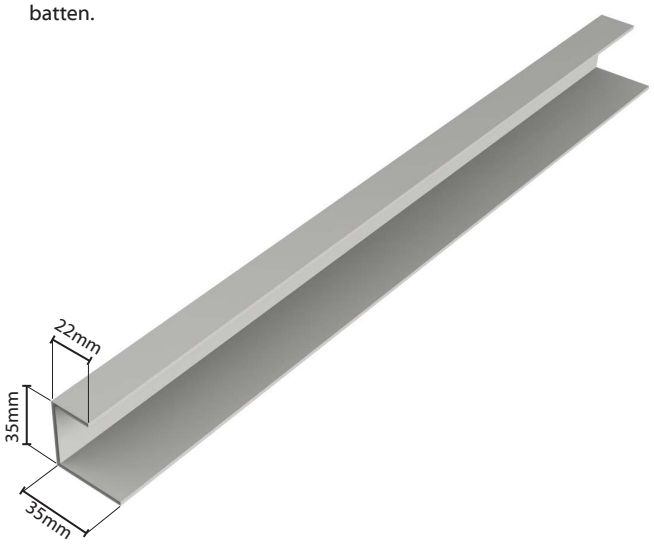

*Use Rondo142 channel to suit Rondo308 ceiling batten.

Resilient Rail

Rondo® 581 Resilient Channel provides sound isolation of linings from the framing. It improves the STC of timber or steel single frame walls.

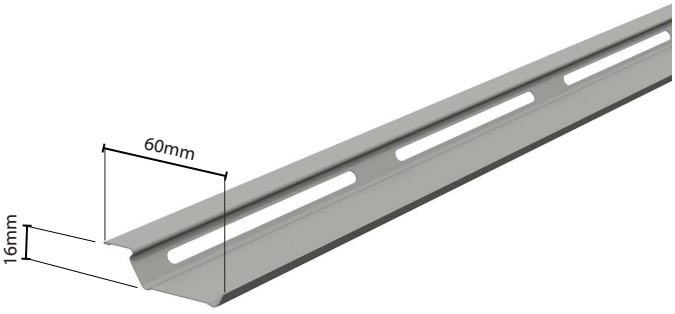

*The allowable alternatives for the Rondo® 581 Resilient Channel for EPB Noise Control Systems is GIB Rail®

System Components Compatibility Chart

Ceiling Batten	Acoustic Clip	Perimeter Channel
RONDO® 310 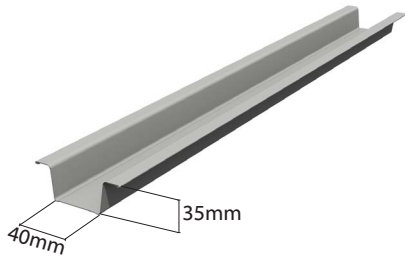	RONDO® 311D RONDO® 313 GIB® Quiet Clip®	RONDO® 340 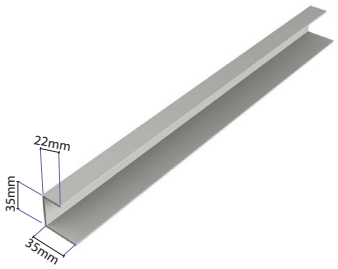
RONDO® 308 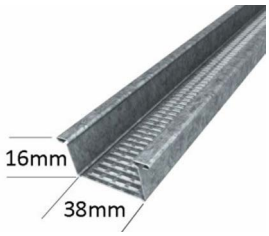	RONDO® 226 RONDO® 394	RONDO® 142 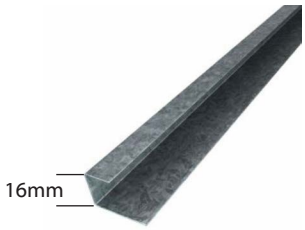
RONDO® 129 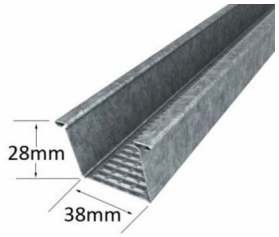	RONDO® 226 RONDO® 394	RONDO® 140 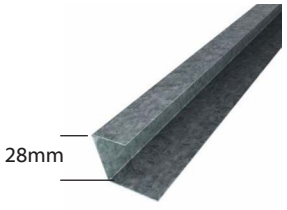

Horizontally aligned components are compatible

EPB Plasterboard Product Range

EPB PLASTERBOARD PRODUCT RANGE	EDGE TYPE	WIDTH (mm)	AVERAGE WEIGHT (Kg/m²)	LENGTH (m)								PRIMARY FUNCTIONS						
				2.4	2.7	3.0	3.3	3.6	4.2	4.8	6.0	Horizontal Fixing	Span 600 Centres on Ceilings	Bracing	Fire Resistance	Noise Control	Impact Resistant	Water Resistant
10mm EPB® Standard	TE/TE	1200	6.9	✓	✓	✓	✓	✓	✓	✓	✓			✓	✓			
10mm EPB® Standard	**TE/SE**	1200	6.9	✓		✓		✓	✓	✓	✓	✓		✓				
10mm EPB® Standard - WIDE	**TE/SE**	**1350**	6.9					✓		✓	✓	✓		✓				
13mm EPB® Standard	TE/TE	1200	8.8	✓	✓	✓	✓	✓	✓	✓	✓		✓		✓			
10mm EPB CeilingSmart®	TE/TE	1200	7.4	✓	✓	✓	✓	✓	✓	✓	✓		✓		✓			
10mm EPB FireSmart®	TE/TE	1200	7.4	✓	✓	✓	✓	✓	✓	✓	✓		✓		✓			
13mm EPB FireSmart®	TE/TE	1200	11.7	✓	✓	✓	✓	✓					✓		✓			
16mm EPB FireSmart®	TE/TE	1200	14.7	✓	✓	✓									✓	✓	✓	
10mm EPB BraceSmart®/NoiseSmart®*	TE/TE	1200	8.9	✓	✓	✓		✓		✓			✓	✓	✓	✓		
10mm EPB BraceSmart®/NoiseSmart®*	**TE/SE**	1200	8.9							✓		✓		✓		✓		
10mm EPB BraceSmart®/NoiseSmart® - WIDE *	**TE/SE**	**1350**	8.9							✓		✓		✓		✓		
13mm EPB BraceSmart®/NoiseSmart®*	TE/TE	1200	12.2	✓	✓	✓	✓	✓					✓	✓	✓	✓	✓	
10mm EPB AquaSmart®	TE/TE	1200	8.3	✓	✓	✓		✓							✓	✓		✓
10mm EPB AquaSmart®	**TE/SE**	1200	8.3	✓						✓		✓						✓
13mm EPB AquaSmart®	TE/TE	1200	11.7	✓	✓	✓		✓					✓		✓	✓		✓

TE/TE = Tapered Both Edges TE/SE = Tapered One Edge, Square the Other

The above table details the product's Primary functions.
Some products may perform more than the functions indicated

***Product Name Change : EPB MultiSmart® Range renamed to EPB BraceSmart®/NoiseSmart®**

The 10mm & 13mm EPB MultiSmart® range will now be reffered to as 10mm & 13mm EPB BraceSmart®/NoiseSmart®, reflecting its dual performance in bracing and noise control applications.
Please note that all product specifications, performance characteristics and installation methods remain unchanged.

EPB Plasterboard Product Range

EPB® Standard



10mm TE/TE



10mm TE/SE



10mm WIDE TE/SE



13mm TE/TE

EPB CeilingSmart®



10mm TE/TE

EPB FireSmart®



10mm TE/TE



13mm TE/TE



16mm TE/TE

EPB BraceSmart/ EPB NoiseSmart®



10mm TE/TE



10mm TE/SE



10mm WIDE TE/SE



13mm TE/TE

EPB AquaSmart®



10mm TE/TE



10mm TE/SE



13mm TE/TE

EPB PLASTERBOARD



FOR MORE INFORMATION

EMAIL info@epb.co.nz

CALL 0800 353 742