NelsonPine®
Laminated Veneer Lumber LVL

FORMWORK SOLUTIONS



NP FORM LVL 11 NP FORM LVL 9 NP BOXXA NP PLANK

Version 2.0 - Oct 2026

NelsonPine LVL Formwork Product Range



NP Form LVL 11



NP Form LVL 9



NP Boxxa



NP Plank

NP Form LVL 11

NP Form LVL 11 is manufactured from NelsonPine LVL and is intended for use as concrete formwork, joists, bearers, walers, soldiers and supports. NP Form LVL 11 is strong, light, straight and uniform which will reduce forming costs and improve the quality of concrete finish. A substantial improvement over conventional timber, LVL is easier to use, and a more convenient alternative than other materials.

NP Form LVL 11 has chamfered edges for ease of handling and a water repellent paint finish.

NP FORM LVL 11 SECTION PROPERTIES TABLE

D x W (mm)	MASS (kg/m)	RIGIDITY EI ($x10^9$ Nmm^2)	DESIGN CAPACITY Øm (kNm)	DESIGN CAPACITY Øv (kN)
95 x 47	2.5	36.9	2.3	13.0
95 x 65	3.5	51.1	3.2	18.0
150 x 77	6.6	238.2	9.6	33.6

1. Design capacities calculated for Ø = 0.9 for short duration loads, K1 = 0.97
2. Members are assumed to be laterally restrained
3. Capacities apply of on-edge orientation of the section

APPLICATION OF CAPACITY TABLES

The capacity tables and standard designs in this brochure have been prepared in accordance with the following standards:

AS 3610:2005 Formwork for Concrete

AS 1720.1:2010 Timber Structures

NOTES FOR JOIST AND BEARER TABLES

1. The design loads for the joist and bearer tables include a 4kPa allowance for stacked materials in accordance with AS 3610. Where this allowance can be reduced, the spans given above maybe increased with advise from the formwork designer.
2. The deflections of the joists and bearers have been limited to those required for a Class 3 finish (the greater of span/270 and 3mm). Since the finish quality is dependant on a number of other factors including formface quality, support deformations and the accuracy of the set up, a Class 3 finish cannot be guaranteed.
3. For multiple spans, the design has assumed the most conservative of 3 and 2 spans and that all spans are of equal length and equally loaded.
4. The design has assumed that the joists are continually restrained by the sheeting and the bearers are restrained by the joists.
5. To satisfy the bearing requirements of the timber, the thickness of the bearer must be equal to or greater than the thickness of the joists it is supporting.
6. Spans values maybe interpolated for intermediate slab thicknesses.

JOIST TABLE FOR SLAB SOFFIT FORMWORK

JOIST SPACING (mm)		MAXIMUM SINGLE SPAN (m)						MAXIMUM MULTIPLE SPAN (m)					
Slab Thick-ness	Section Size	225	300	400	450	480	600	225	300	400	450	480	600
100	**95x47**	1.9	1.7	1.5	1.5	1.4	1.3	2.3	2.1	1.9	1.8	1.8	1.7
	95x65	2.1	1.9	1.7	1.7	1.6	1.5	2.6	2.4	2.1	2.1	2.0	1.9
	150x77	3.5	3.2	2.9	2.8	2.7	2.5	4.3	4.0	3.6	3.5	3.4	3.1
150	**95x47**	1.8	1.6	1.5	1.4	1.4	1.3	2.2	2.0	1.8	1.7	1.7	1.6
	95x65	2.0	1.8	1.6	1.6	1.5	1.4	2.5	2.2	2.0	1.9	1.9	1.8
	150x77	3.3	3.0	2.7	2.6	2.6	2.4	4.1	3.7	3.4	3.3	3.2	3.0
200	**95x47**	1.7	1.5	1.4	1.3	1.3	1.2	2.1	1.9	1.7	1.6	1.6	1.5
	95x65	1.9	1.7	1.5	1.5	1.4	1.3	2.3	2.1	1.9	1.8	1.8	1.7
	150x77	3.1	2.8	2.6	2.5	2.4	2.3	3.9	3.5	3.2	3.1	3.0	2.8
300	**95x47**	1.5	1.4	1.3	1.2	1.2	1.1	1.9	1.7	1.6	1.5	1.5	1.4
	95x65	1.7	1.6	1.4	1.4	1.3	1.2	2.1	1.9	1.8	1.7	1.7	1.5
	150x77	2.9	2.6	2.4	2.3	2.2	2.1	3.6	3.3	3.0	2.9	2.8	2.6
400	**95x47**	1.4	1.3	1.2	1.1	1.1	1.0	1.8	1.6	1.5	1.4	1.4	1.3
	95x65	1.6	1.5	1.3	1.3	1.2	1.1	2.0	1.8	1.6	1.6	1.5	1.4
	150x77	2.7	2.5	2.2	2.1	2.1	1.9	3.4	3.1	2.8	2.7	2.6	2.4
600	**95x47**	1.3	1.2	1.1	1.0	1.0	0.9	1.6	1.5	1.3	1.3	1.2	1.1
	95x65	1.4	1.3	1.2	1.1	1.1	1.0	1.8	1.6	1.5	1.4	1.4	1.3
	150x77	2.4	2.2	2.0	1.9	1.9	1.8	3.0	2.8	2.5	2.4	2.4	2.2
1000	**95x47**	1.1	1.0	0.9	0.9	0.9	0.8	1.4	1.3	1.1	1.0	1.0	0.9
	95x65	1.3	1.1	1.0	1.0	1.0	0.9	1.6	1.4	1.3	1.2	1.2	1.0
	150x77	2.1	1.9	1.7	1.7	1.6	1.5	2.6	2.4	2.2	2.1	2.0	1.8

BEARER TABLE FOR SLAB SOFFIT FORMWORK

BEARER SPACING (m)		MAXIMUM SINGLE SPAN (m)						MAXIMUM MULTIPLE SPAN (m)					
Slab Thickness	Section Size	0.9	1.2	1.5	1.8	2.1	2.4	0.9	1.2	1.5	1.8	2.1	2.4
100	95x65	1.3	1.2	1.1	1.0	1.0	0.9	1.6	1.5	1.3	1.2	1.1	1.0
	150x77	2.2	2.0	1.8	1.7	1.6	1.6	2.7	2.5	2.3	2.1	1.9	1.8
150	95x65	1.2	1.1	1.0	1.0	0.9	0.9	1.5	1.4	1.2	1.1	1.0	1.0
	150x77	2.1	1.9	1.7	1.6	1.6	1.5	2.6	2.3	2.1	1.9	1.8	1.7
200	150x77	2.0	1.8	1.6	1.5	1.5	1.4	2.4	2.2	2.0	1.8	1.7	1.5
300	150x77	1.8	1.6	1.5	1.4	1.3	1.2	2.2	2.0	1.8	1.6	1.5	1.4
400	150x77	1.7	1.5	1.4	1.3	1.3	1.2	2.1	1.8	1.6	1.5	1.3	1.2
600	150x77	1.5	1.4	1.3	1.2	1.1	1.1	1.8	1.6	1.4	1.2	1.0	0.9
1000	150x77	1.3	1.2	1.1	1.0	0.8	0.7	1.5	1.1	0.9	0.7	0.6	0.5

Vertical Forms

NOTES FOR VERTICAL FORMS

1. The design of the vertical forms is based on a hydrostatic pressure distribution.

2. Deflections of the soldiers and walers have been limited to the greater of span/270 and 3mm as required for a Class 3 finish. Since the finish quality is dependant on a number of factors including the formface used and the accuracy of the set up, a Class 3 finish cannot be guaranteed.

3. Tie bolt holes are not to be bored through any of the soldier or waler members.

4. The maximum distance from the top of the form to the nearest tie rod must be a maximum of 650mm.

5. The forms are not suitable for grout injected concrete, concrete pumped from below, deep revibration or external vibration of the concrete.

VERTICAL FORMS UP TO 3.9M

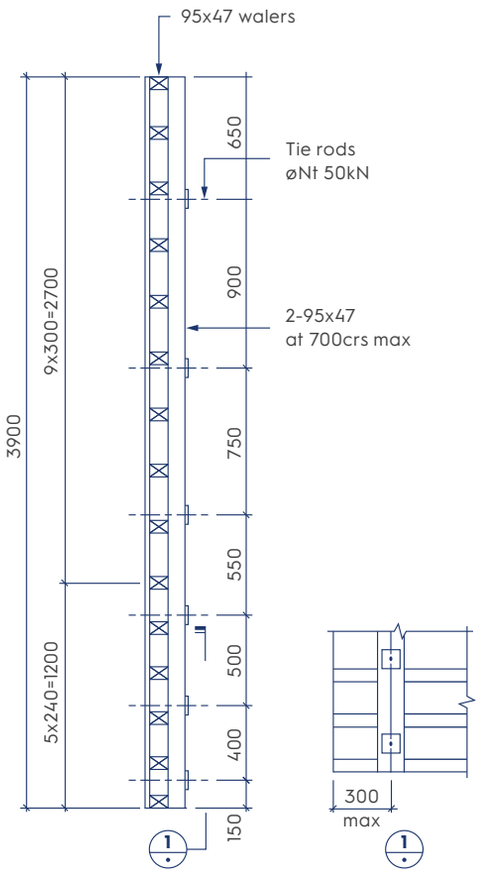

VERTICAL FORMS UP TO 3.3M

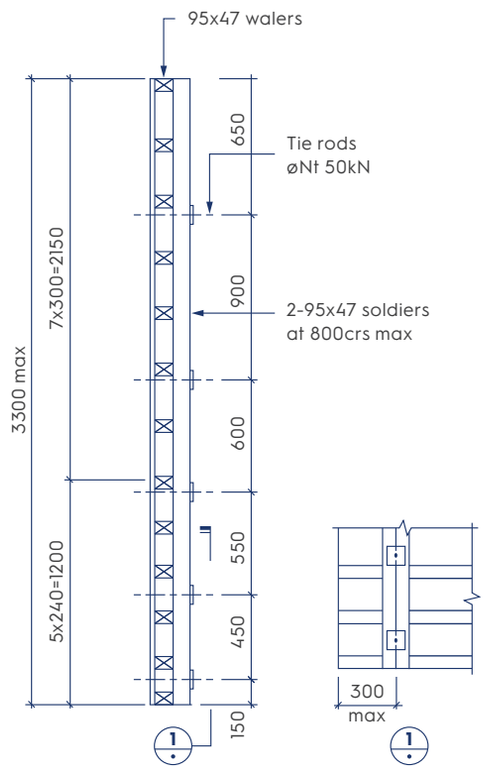

VERTICAL FORMS UP TO 3.0M

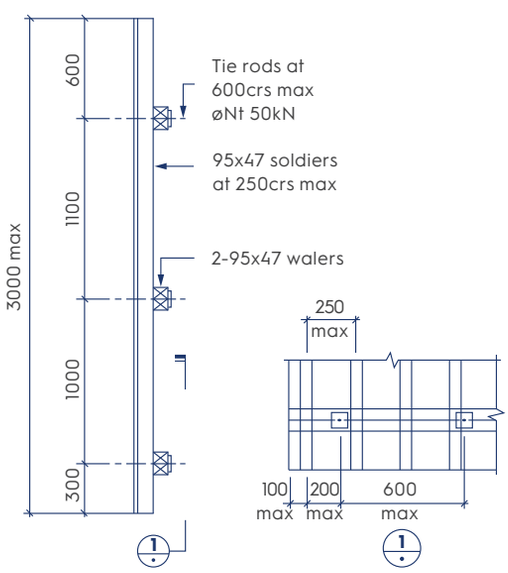

VERTICAL FORMS UP TO 1.8M

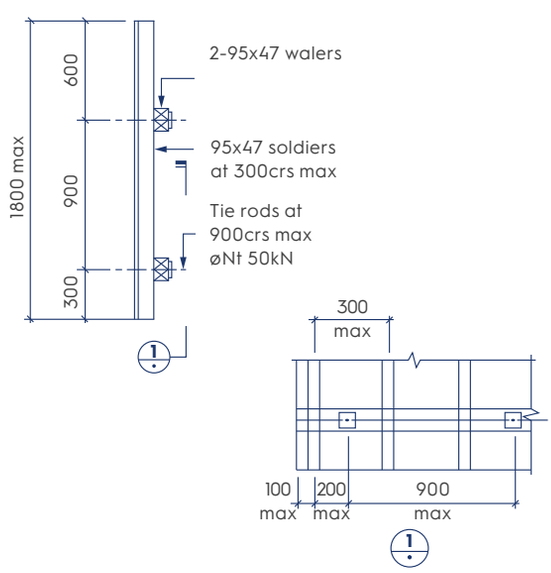

*Minimum distance between tie-rod and soldier is >100 but <200mm.

*Minimum distance between tie-rod and soldier is >100 but <200mm.

NP Form LVL 9

NP Form LVL 9 is manufactured from NelsonPine LVL and is intended for use as concrete formwork, joists, bearers, walers, soldiers and supports. NP Form LVL 9 is strong, light, straight and uniform which will reduce forming costs and improve the quality of concrete finish. As a substantial improvement over conventional timber, LVL is easier to use, and a more convenient alternative than other materials.

NP Form LVL 9 has chamfered edges for ease of handling and a water repellent paint finish.



NP FORM LVL 9 SECTION PROPERTIES TABLE

D x W (mm)	MASS (kg/m)	RIGIDITY EI ($x10^9$ Nmm^2)	DESIGN CAPACITY Øm (kNm)	DESIGN CAPACITY Øv (kN)
95 x 63	3.3	42.8	2.8	17.4
150x75	6.2	200.4	8.3	32.7

1. Design capacities calculated for Ø = 0.9 for short duration loads, K_1 = 0.97
2. Members are assumed to be laterally restrained
3. Capacities apply of on-edge orientation of the section

APPLICATION OF CAPACITY TABLES

The capacity tables and standard designs in this brochure have been prepared in accordance with the following standards:

AS3610:2005 Formwork for Concrete

AS1720.1:2010 Timber Structures

NOTES FOR JOIST AND BEARER TABLES

1. The design loads for the joist and bearer tables include a 4kPa allowance for stacked materials in accordance with AS 3610. Where this allowance can be reduced, the spans given above maybe increased with advise from the formwork designer.
2. The deflections of the joists and bearers have been limited to those required for a Class 3 finish (the greater of span/270 and 3mm). Since the finish quality is dependant on a number of other factors including formface quality, support deformations and the accuracy of the set up, a Class 3 finish cannot be guaranteed.
3. For multiple spans, the design has assumed the most conservative of 3 and 2 spans and that all spans are of equal length and equally loaded.
4. The design has assumed that the joists are continually restrained by the sheeting and the bearers are restrained by the joists.
5. To satisfy the bearing requirements of the timber, the thickness of the bearer must be equal to or greater than the thickness of the joists it is supporting.
6. Spans values maybe interpolated for intermediate slab thicknesses.

JOIST TABLE FOR SLAB SOFFIT FORMWORK

JOIST SPACING (mm)		MAXIMUM SINGLE SPAN (m)						MAXIMUM MULTIPLE SPAN (m)					
Slab Thickness	Section Size	225	300	400	450	480	600	225	300	400	450	480	600
100	**95x63**	2.0	1.8	1.6	1.6	1.5	1.4	2.4	2.2	2.0	1.9	1.9	1.8
	150x75	3.3	3.0	2.7	2.6	2.6	2.4	4.1	3.7	3.4	3.3	3.2	3.0
150	**95x63**	1.9	1.7	1.5	1.5	1.4	1.3	2.3	2.1	1.9	1.8	1.8	1.7
	150x75	3.1	2.8	2.6	2.5	2.4	2.3	3.9	3.5	3.2	3.1	3.0	2.8
200	**95x63**	1.8	1.6	1.4	1.4	1.4	1.3	2.2	2.0	1.8	1.7	1.7	1.6
	150x75	3.0	2.7	2.4	2.3	2.3	2.1	3.7	3.3	3.0	2.9	2.9	2.7
300	**95x63**	1.6	1.5	1.3	1.3	1.2	1.2	2.0	1.8	1.7	1.6	1.6	1.4
	150x75	2.7	2.5	2.2	2.2	2.1	2.0	3.4	3.1	2.8	2.7	2.6	2.4
400	**95x63**	1.5	1.4	1.2	1.2	1.2	1.1	1.9	1.7	1.6	1.5	1.5	1.4
	150x75	2.6	2.3	2.1	2.0	2.0	1.8	3.2	2.9	2.6	2.5	2.5	2.3
600	**95x63**	1.4	1.2	1.1	1.1	1.0	1.0	1.7	1.5	1.4	1.3	1.3	1.2
	150x75	2.3	2.1	1.9	1.8	1.8	1.7	2.9	2.6	2.4	2.3	2.2	2.1
1000	**95x63**	1.2	1.1	1.0	0.9	0.9	0.8	1.5	1.3	1.2	1.1	1.1	1.0
	150x75	2.0	1.8	1.6	1.6	1.5	1.4	2.5	2.3	2.1	2.0	1.9	1.7

BEARER TABLE FOR SLAB SOFFIT FORMWORK

BEARER SPACING (m)		MAXIMUM SINGLE SPAN (m)						MAXIMUM MULTIPLE SPAN (m)					
Slab Thickness	Section Size	0.9	1.2	1.5	1.8	2.1	2.4	0.9	1.2	1.5	1.8	2.1	2.4
100	95x63	1.2	1.1	1.0	1.0	0.9	0.9	1.5	1.4	1.2	1.1	1.0	1.0
	150x75	2.1	1.9	1.7	1.6	1.6	1.5	2.6	2.3	2.1	1.9	1.8	1.7
150	95x63	1.1	1.0	1.0	0.9	0.9	0.8	1.4	1.3	1.1	1.0	0.9	0.9
	150x75	2.0	1.8	1.6	1.5	1.5	1.4	2.4	2.2	2.0	1.8	1.7	1.6
200	95x63	1.1	1.0	0.9	0.9	0.8	0.8	1.4	1.2	1.0	1.0	0.9	0.8
	150x75	1.8	1.7	1.6	1.5	1.4	1.3	2.3	2.1	1.8	1.7	1.5	1.4
300	95x63	1.0	0.9	0.8	0.8	0.7	0.7	1.2	1.0	0.9	0.8	0.8	0.7
	150x75	1.7	1.5	1.4	1.3	1.3	1.2	2.1	1.8	1.6	1.5	1.4	1.3
400	95x63	0.9	0.8	0.8	0.7	0.7	0.7	1.1	1.0	0.9	0.8	0.7	0.6
	150x75	1.6	1.4	1.3	1.3	1.2	1.1	1.9	1.7	1.5	1.4	1.3	1.1
600	95x63	0.8	0.8	0.7	0.7	0.6	0.5	1.0	0.8	0.7	0.6	0.5	0.4
	150x75	1.4	1.3	1.2	1.1	1.1	1.0	1.7	1.5	1.3	1.1	1.0	0.8
1000	95x63	0.7	0.7	0.6	0.5	0.4	0.4	0.7	0.6	0.4	0.4	0.3	0.3
	150x75	1.2	1.1	1.0	1.0	0.8	0.7	1.4	1.1	0.9	0.7	0.6	0.5

Vertical Forms

NOTES FOR VERTICAL FORMS

1. The design of the vertical forms is based on a hydrostatic pressure distribution.

2. Deflections of the soldiers and walers have been limited to the greater of span/270 and 3mm as required for a Class 3 finish. Since the finish quality is dependant on a number of factors including the formface used and the accuracy of the set up, a Class 3 finish cannot be guaranteed.

3. Tie bolt holes are not to be bored through any of the soldier or waler members.

4. The maximum distance from the top of the form to the nearest tie rod must be a maximum of 650mm.

5. The forms are not suitable for grout injected concrete, concrete pumped from below, deep revibration or external vibration of the concrete.

VERTICAL FORMS UP TO 3.9M

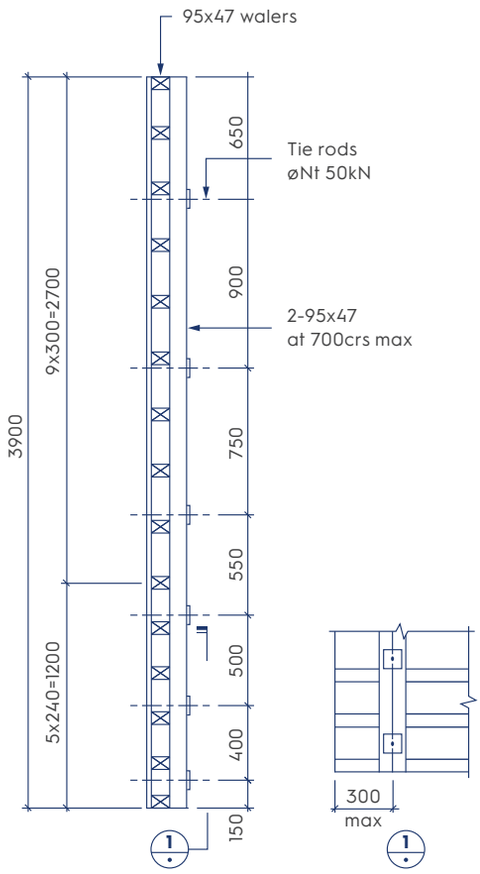

VERTICAL FORMS UP TO 3.3M

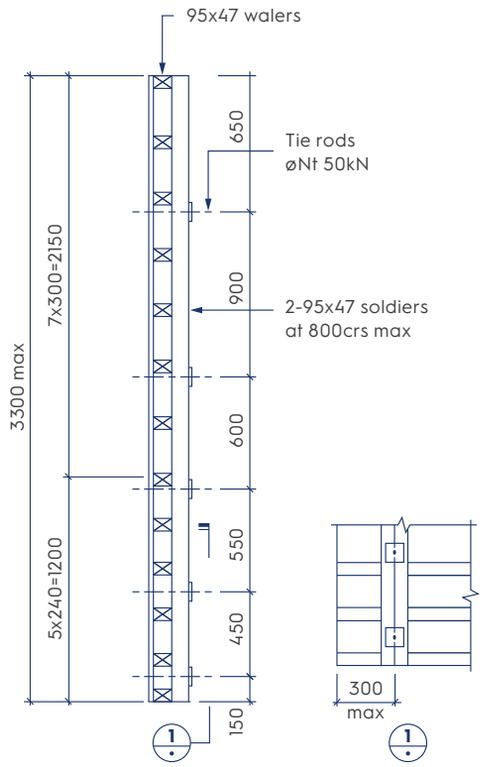

VERTICAL FORMS UP TO 3.0M

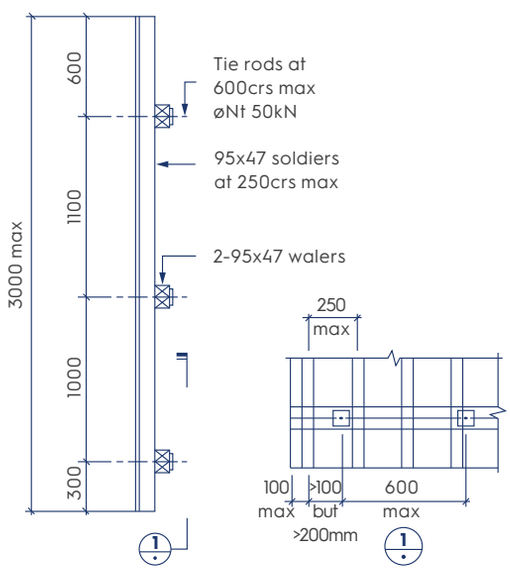

*Minimum distance between tie-rod and soldier is >100 but <200mm.

VERTICAL FORMS UP TO 1.8M

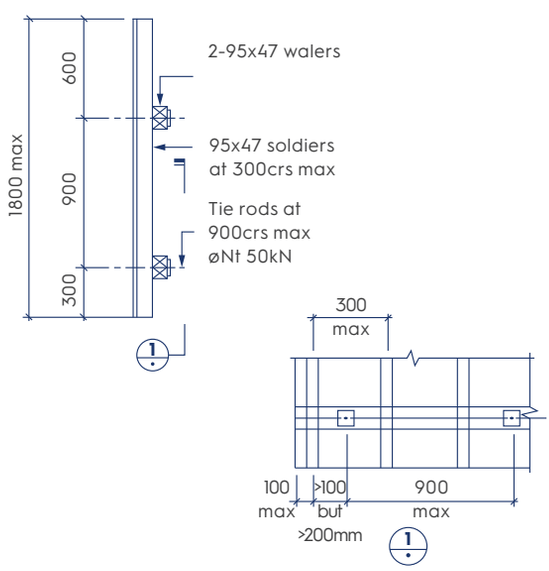

*Minimum distance between tie-rod and soldier is >100 but <200mm.

NP Boxxa

NP Boxxa is manufactured from crossbanded NelsonPine LVL giving across grain strength, stability and longevity to make boxing for formwork, precasting and everyday concrete projects easier, quicker and more economical. Crossbanded LVL make the product more resistant to cupping and swelling width wise when used in concrete boxing type applications.

- Longer life than ordinary timber boxing.
- Easier to handle, strong, straight and consistent.
- Special paint surface for easier concrete release and moisture resistance.
- Specifically designed for stability, longevity and strength.



FINISH

Painted with a moisture resistant, high wax content paint.

NP BOXXA SECTION SIZES

D X W (mm)	LENGTH (mm)	PIECES PER PACK
100 x 36	6000	90
150 x 36	6000	63
170 x 36	6000	54
200 x 36	6000	45
240 x 36	6000	36
300 x 36	6000	27

NP Plank

NP Plank is manufactured from NelsonPine LVL. The structural reliability of NelsonPine LVL makes it the perfect solution for a safe, lightweight scaffold plank. Each NP Plank is made from many layers of thin veneer, which increases the uniformity and strength of the product.

NP Plank can be used to advantage in corrosive environments and where electrical conductivity is a hazard for metal plank alternatives.



SECTION SIZE

42 x 230mm other than North America

UNIT WEIGHT

5.4kg/m

FINISH

Rounded edges and painted ends.

Permanent edge branding: NP PLANK, PROOF TESTED SCAFFOLD PLANK, EWPAA MILL 919, AS/NZS 1577:2018, WLL250kg UDL, MAX SPAN 1.8m, Manufacturing reference number.

STRENGTH AND STIFFNESS VERIFICATION:

Every NP PLANK is individually proof tested to verify that it conforms to AS 1577:2018 requirements before being branded as a scaffold plank. Modulus of Rupture and Modulus of Elasticity are frequently tested throughout the LVL production process in accordance with the requirements of the Engineered Wood Products Association of Australasia (EWPAA) certification scheme. NP PLANK is engineered in accordance with AS/NZS 4357:2022 Structural Laminated Veneer Lumber and AS/NZS 1577:2018 Scaffold Planks.

MAXIMUM SPANS/BAY AS SPECIFIED IN AS/NZS 1576.1

DUTY LIVE LOADS	MAXIMUM SPAN (M)	MAXIMUM WORKING LOADS/BAY (kN)
Light Duty	2.4	2.2kN (inc. 1.0kN max point load)
Medium Duty	2.0	4.4kN (inc. 1.5kN max point load)
Heavy Duty	1.8	6.6kN (inc. 2.0kN max point load)

1 kN is approximately 100kg.

BEST USE PRACTICES TO AVOID DAMAGING SCAFFOLD PLANKS

- Do not use planks over greater spans than those recommended by these tables.
- Do not drop or throw scaffold planks from excessive heights.
- Do not overload scaffold planks. If planks are over loaded then they must be removed and tested before reuse.
- Do not drive vehicles over scaffold planks.
- Notching and shallow cuts in planks reduce strength
- Take precautions against slag burns from gas cutting and welding.

CHEMICAL EFFECTS

- The phenol formaldehyde resin used to bond NP PLANK veneers is highly resistant to the attack of chemicals. The radiata pine veneers, however are susceptible to concentrated chemical attack. The risk of damage is related to the concentration and temperature of the chemical solution. NP PLANK will largely be unaffected by exposure to moderate strength acids and alkalis (pH range 3-9). Strong concentrations of acids and alkalis will however affect lignin which binds the wood fibres. Planks used in these conditions should be regularly evaluated before reuse.

DECAY

- Under normal service conditions, planks subjected to wetting and drying cycles will not decay.
- Typically, decay is caused by improper storage practices.
- Decay can effect the structural performance of planks and any plank found with decay should be removed from service, allowed to dry and then evaluated before reuse.

INSPECTION

- Regular inspection is strongly recommended. Any plank that shows signs of misuse or is suspect of damage should be withdrawn from use pending evaluation of performance.



Additional Information

NelsonPine LVL is a sustainably-grown plantation radiata pine engineered wood composite manufactured from rotary peeled veneers, laid up and bonded with parallel grain orientation.

Cross banded NelsonPine LVL includes veneer layers at perpendicular grain orientation to the primary grain direction.

The primary benefits of NelsonPine LVL over sawn timber are:

- Stiffness and visual grade sorting of the veneers allows placement of specific veneer qualities at specific positions in the LVL to optimise visual and structural properties and minimise structural variability.
- The randomisation and dispersion of strength reducing characteristics, such as knots and holes, throughout the veneer layer assembly results in more uniform structural properties.
- LVL is straighter than sawn timber as the LVL cross section is composed of multiple laminates, so does not have concentrated grain disturbances displayed by sawn timber.

PRODUCT CERTIFICATION

NelsonPine LVL is certified to AS/NZS 4357.0:2022 Structural Laminated Veneer Lumber by the Engineered Wood Products Association of Australasia (EWPAA), a JAS/ANZ accredited certification body. EWPAA's certification with JAS/ANZ is a Type 5 Certification Scheme under the globally recognised standard ISO/IEC 17067:2013 Conformity assessment —Fundamentals of Product Certification and Guidelines for Product Certification Schemes.

The EWPAA's Type 5 certification scheme goes further than the requirements of ISO 17067:2013. It includes ongoing inspection and testing of product in the factory and in the market, as well as auditing of the manufacturing process and management systems by an independent panel of industry experts to review EWPAA's certification activities. This puts the EWPAA certification scheme among the most comprehensive in the building products industry.

Nelson Pine Industries operates a continuous process control system in accordance with the requirements of AS/NZS 4357.0:2022 and the EWPAA Product Certification Scheme. Structural properties published for NelsonPine LVL are determined by independent third-party testing in accordance with the requirements of AS/NZS 4357.0:2022 Structural Laminated Veneer Lumber.

NelsonPine LVL is certified to ISO 9001:2015 Quality Management System by Telarc, New Zealand's leading management systems assessment and certification body under JAS-ANZ accreditation.

LVL is manufactured under a fully quality controlled process.

PRODUCT SPECIFICATION

Veneer Thickness - Nominal 3.6mm

Species - Radiata Pine

Joints - Scarf/overlap/butt

MOISTURE CONTENT

8-15% at time of dispatch

ADHESIVE

Phenolic producing a Type A Bond in accordance with AS/NZS 2754.1

DIMENSIONAL TOLERANCES

Length -0mm, +15mm

Depth -2mm, +2mm

Thickness -2mm, +2mm

Spring <(L/1000)

STORAGE AND HANDLING

NelsonPine LVL expands in thickness and depth when allowed to get wet. To ensure the full benefits of NelsonPine LVL as a dry, straight and true material are available at the time of installation, the following recommendations regarding storage are made:

1. NelsonPine LVL is kept dry during storage and transport.
2. Stored under a ventilated cover with fillets placed between each layer.
3. Stacked clear of the ground on at least three evenly spaced bearers.
4. Bearers and fillets to be placed vertically in line and support NelsonPine LVL evenly and flat.
5. Avoid mechanical damage during handling.
6. Re-seal cut edges of painted formwork with a water-repellent paint.

NELSON PINE INDUSTRIES LTD

PO Box 3049, Richmond,
Nelson, New Zealand 7050

Phone: 03 543 8800 or 0800 800 438

Website: www.nelsonpine.co.nz

Version 2.0 - Oct 2026

NelsonPine LVL and laminate device are registered tradenames and trademarks of Nelson Pine Industries Ltd.