GoldenEdge®
Medium Density Fibreboard

Panelbrace™
WALL BRACING SYSTEMS



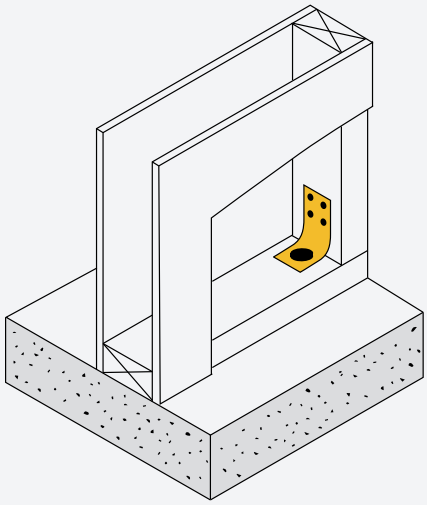

SPECIFICATIONS AND INSTALLATION GUIDE

PANEL HOLD-DOWNS
BRACING DESIGN

JUNE 2024

FSC www.fsc.org MIX Wood from responsible sources FSC® C019095

Eco® Choice Aotearoa Licence #: 3208038

PLANTATION GROWN • RENEWABLE RESOURCE •

Panelbrace™
WALL BRACING SYSTEMS

Nelson Pine Industries Ltd is a world-leading manufacturer in wood originated products.

PANELBRACE

GoldenEdge® MDF Panelbrace Wall Bracing Systems are built to resist earthquake and wind loads on timber frame buildings designed and constructed in accordance with NZS 3604: 2011 and light steel framed buildings that comply with NZBC B1 for structure and B2 for durability.

Nelson Pine Industries Limited are holders of BRANZ appraisal 779 for GoldenEdge® MDF Panelbrace Wall Bracing systems based on 9mm and 12mm GoldenEdge® Regular MDF.

The management systems used to produce GoldenEdge® MDF are Certified to ISO9001 quality, and IS014001 environmental management standard. GoldenEdge® MDF is manufactured from trees that are harvested from local plantation forests. The environmental footprint of our GoldenEdge® MDF has been assessed and verified following international standards. Our published Envronmental Product Declaration can be found on EPD Hub.

2024 UPDATE OF GOLDENEDGE PANELBRACE WALL BRACING SYSTEMS

In response to customer requests, we have expanded the ways in which GoldenEdge® Panelbrace systems can be used for bracing. This is backed up by data from testing using the BRANZ P21 bracing test.

The key changes include:

- A change in naming system to reflect the different options offered
- Alternative fasteners to make installation faster and finishing easier
- Panelbrace systems for light steel framing.
- 2 sided bracing using GoldenEdge® MDF one side and GIB® Standard on the other.

We found our 2 sided bracing performance to be as good as reported values for Plywood plus GIB®.

BRANZ Appraised
Appraisal No. 779

GoldenEdge® Panelbrace - Wall Bracing Systems

TABLE 1: GOLDENEDGE® MDF PANELBRACE 2024 BU/m RATINGS

TYPE	LINING	FIXING	OTHER REQUIREMENTS	MINIMUM LENGTH** (M)	BU/m	
					W	EQ
NP-N	9 or 12mm GoldenEdge® Regular MDF one side	Screws, clouts, staples	n/a	0.6	80	70
NP-H	9 or 12mm GoldenEdge® Regular MDF one side	Screws, clouts, staples	Hold down	0.4	95	105
				1.2	140*	130*
NPf-H	9 or 12mm GoldenEdge® Regular one side	Finish nails	Hold down	0.4	65	80
				1.2	120	100
NPG2-H	9 or 12mm GoldenEdge® Reg MDF one side, GIB® standard plaster board the other	Screws, clouts, staples	Hold down	1.2	150*	150*
NPs	9 or 12mm GoldenEdge® Regular one side	Screws	Steel frame hold down	0.6	85	90
				1.2	100	95

Notes: * Timber floors - a limit of 120 BU/m for timber floors or 150 BU/m for Concrete floors applies as per NZS 3604:2011.

The bracing ratings quoted are for walls 2.4m high. For walls of different heights refer to NZS 3604:2011 paragraph 8.3.1.4 or see wall heights on Page 4.

Notes: ** The minimum length is the minimum length of panel section you can claim bracing units for. In the case of NP-N (no hold downs) we have only tested for 1 length but you can use the any length above this and claim the BU/m.

No testing was done for shorter lengths for NPG2-H but bracing units for single sided shorter lengths could be used if the additional units are required for these lengths.

BRACING SYSTEM PANELS

Panel products appraised to meet the published bracing requirements are GoldenEdge® Regular MDF 9mm and 12mm thick. The sheets have square edges to all four sides. The nominal density is 725 kg/m³. GoldenEdge® Panelbrace is 9mm or 12mm GoldenEdge® Regular MDF which is cut to convenient 1200mm x 2400mm size associated with standard stud spacings and height.

Other sheet sizes are available in GoldenEdge® Regular 9mm and 12mm and can be used in the Panelbrace wall bracing system.

DURABILITY

GoldenEdge® Panelbrace Wall Bracing Systems have a serviceable life of at least 50 years providing they remain dry in service and are maintained in accordance with BRANZ Appraisal No.779.

NELSON PINE INDUSTRIES LTD

PO Box 3049, Richmond,
Nelson, New Zealand 7050

Phone: 03 543 8800 or 0800 800 438
Website: www.nelsonpine.co.nz

DESIGN CONSIDERATIONS

GoldenEdge® MDF Panelbrace Wall Bracing Systems are for use in dry, internal, protected locations of thermally insulated buildings which are heated, intermittently heated and predominantly unheated in accordance with NZS 3602 Section 110, Table 1E and Section 205. The internal environment must be such that the moisture content of the supporting timber framing does not exceed 18%. GoldenEdge® MDF Panelbrace Wall Bracing Systems must either be exposed to view or be in locations easily accessible for inspection. GoldenEdge® MDF Panelbrace Wall Bracing Systems must not be located in any high moisture environment or in areas subject to water splash. They must not be used in areas such as bathrooms, toilets, laundries or kitchens. The building must be closed in and weathertight prior to the installation of the GoldenEdge® Regular MDF Sheets.

GoldenEdge® Regular MDF sheets must not be used in saunas or steam rooms. GoldenEdge® MDF Panelbrace Wall Bracing Systems must not be exposed to temperatures of 50°C or greater for prolonged periods. Refer to appliance and fitting manufacturers for installation details.

WALL HEIGHTS

The bracing units quoted in Table 1 are for 2.4m high walls. For walls higher than 2.4m the fixing instructions for GoldenEdge® MDF Panelbrace™ Wall Bracing Systems are as follows:

GoldenEdge Regular 9mm or 12mm MDF sheets are fixed vertically. Adjoining sheets require an approximate 2mm gap between them to allow for movement. Full sheets must be used wherever possible. Bracing panels must be fixed from top plate to bottom plate.

For wall heights over 2.4m, a full sheet can be used if they extend to the full height (e.g. 2.7m x 1.2m). Alternatively a part sheet can be stacked above a full sheet, butt joined on a single row of nogs with each sheet/part sheet independently nailed off as per the nail spacing in the Panelbrace™ specifications. (eg 2.4 x 1.2m sheet with a 0.3m x 1.2m part sheet above it to give a 2.7m x 1.2m bracing element).

Fixings must be no closer than 10mm from the sheet edge and no closer than 18mm from the top and bottom edges of the sheet. Fixings are driven at right angles to the sheet until the head is flush with the sheet surface, for nail fixings, or countersunk approximately 0.5mm for screw fixings. Fixings must not be over-driven.

For wall heights greater than 2.4m, the bracing rating is calculated by multiplying the appropriate value shown in Table 1 * in our brochure by a factor f=2.4/H where H is the wall height in metres. Walls lower than 2.4m shall be rated as if they were 2.4m high.

OPENINGS IN BRACING ELEMENTS

Small openings of 90 x 90mm or less may be placed anywhere except within 90mm of the edge of the bracing element. Openings above 90 x 90mm such as switch boards, recessed cabinets and TV's etc. should be placed outside of the bracing element or locate bracing on the other side of the wall framing.

PREVENTION OF FIRE OCCURING

Separation or protection must be provided to GoldenEdge® Regular MDF from heat sources such as stoves, heaters, flues and chimneys. Part 7 of NZBC Verification Method C/VM1 and Acceptable Solution C/AS1, and Acceptable Solution C/AS2 provide methods for separation and protection of combustible materials from heat sources.

The New Zealand fire performance group rating for painted regular density MDF is group 3 as per C/VM2 Appendix A 1.5, Table A1.

FINISHING

Prior to painting the sheets must be cleaned down, and any nail/screw holes filled. GoldenEdge® Regular MDF sheets are finished with three coats of polyurethane or a paint system comprising a primer/ sealer and two top coats.

PRODUCT WARRANTY

GoldenEdge® carries a 12 month warranty against faulty materials or workmanship by the manufacturer to the extent of replacement of the product but not including any indirect or consequential loss subject to the provisions of the Consumer Guarantees Act 1993. This warranty applies only when the product has been used in accordance with the recommendations. Any defect must be advised to the manufacturer within 21 days of determination or from the day such defects should have become known. Nelson Pine Industries Ltd reserves the right to change specifications contained in this publication without notice.

SAFE WORK PRACTICE

This is a reconstituted wood panel made from wood, resin and wax. This must be handled in accordance with safe work practices. Exposure to wood dust and/or formaldehyde may cause irritation to the eyes, respiratory system and skin, and may cause sensitisation by inhalation resulting in asthma, and by skin contact resulting in dermatitis. Wood dust is classified as a known carcinogen. Repeated inhalation of wood dust over many years may cause nasal cancer. Formaldehyde is classified as a probable carcinogen.

Work areas must be well ventilated and kept clean. Sawing, sanding and machining equipment must be fitted with dust extractors to ensure that dust levels are kept within standards laid down by Worksafe Australia, Worksafe New Zealand, or the specific country of use. If not, a dust mask conforming with AS/NZS 1715 and AS/NZS 1716 and eye protection conforming with AS/NZS 1337 must be worn. Offcuts, shavings and dust must be disposed of in a manner which avoids the generation of dust and in accordance with the requirements of local waste disposal authorities. In end use applications all product surfaces exposed to occupied space must be sealed. Storage areas containing large quantities of this product must be adequately ventilated.

FURTHER INFORMATION

Refer to the Safety Data Sheet for this product available from Nelson Pine Industries Ltd website.

Panelbrace – Wall Bracing Systems

The bottom plate in bracing system Type NP-N is fixed to the floor framing in accordance with NZS 3604: 2011 Table 8.19, which is either 2/100x3.75mm hand-driven nails or 3/90 x 3.15mm power-driven nails, at maximum 600mm centres.

Bracing systems NP-H, NPf-H or NPG2-H require the use of end straps and a suitable hold-down anchor (see Figure 2) at each end of the bracing element. Alternatively the GIB HandiBrac® may be used instead of straps, but a suitable hold-down anchor with a characteristic or design strength of 12kN (for timber floors) and 15kN (for concrete floors) is required.

Within the length of the bracing element, intermediate fixings to the bottom plate are to be in accordance with NZS 3604.

Panel Hold-Downs for NP-H, NPf-H, NPG2-H

FIXING TO FRAMING

Figure 2
Concrete floors
- internal walls – end straps

M12 galvanised bolt and 50x50x3mm square galvanised washer

6 - 30x2.5mm flat head nails to each side of stud

3 - 30x2.5mm flat head nails to each side of bottom plate (strap passes underneath plate)

400mm x 25mm x 0.9 galvanised bracing strap

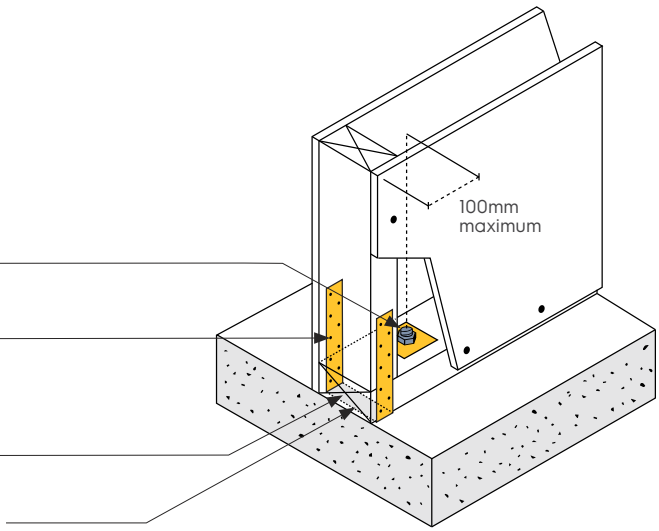

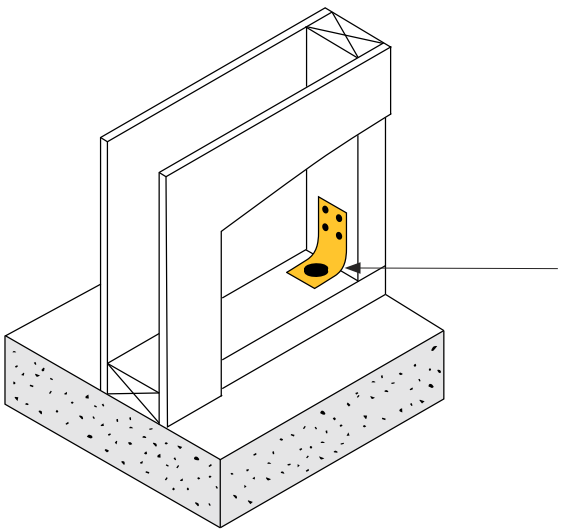

Figure 3:
Concrete Floors
– internal walls – GIB HandiBrac®

Locate the GIB HandiBrac® bracket centrally on the stud

GIB HandiBrac® bracket with concrete anchor with uplift capacity of at least 15kN

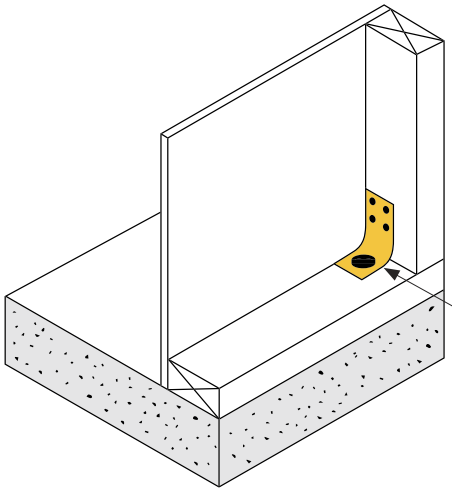

Figure 4:
Concrete Floors
– external walls – GIB HandiBrac®

To maximise concrete edge distance, locate the GIB HandiBrac® bracket flush with the inside face of the stud

GIB HandiBrac® bracket

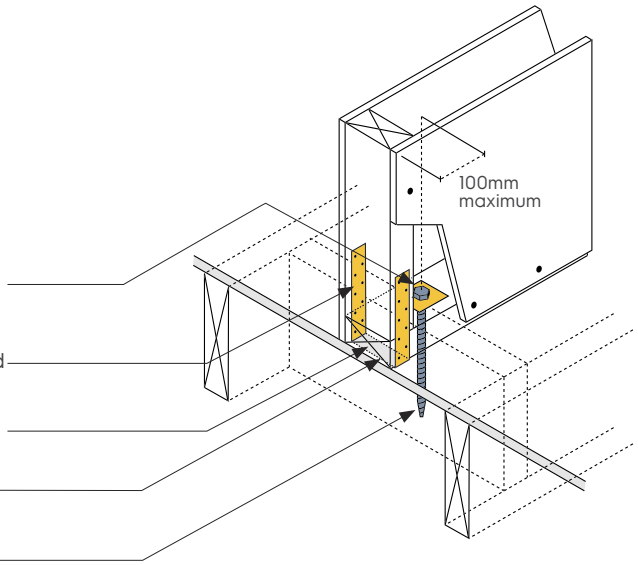

Figure 5
Timber floors
– internal walls – end straps

12mm dia x 150mm galvanised coach screw and 50x50x3mm square galvanised washer

6 - 30x2.5mm flat head nails to each side of stud

3 - 30x2.5mm flat head nails to each side of bottom plate (strap passes underneath plate)

400mm x 25mm x 0.9 galvanised bracing strap

Screw centered over joist or bearer below or full depth solid block between bearers

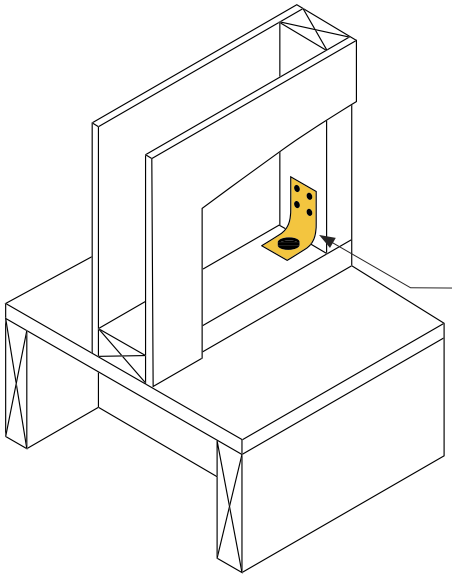

Figure 6
Timber floors
– internal walls – GIB HandiBrac®

Locate the GIB HandiBrac® bracket centrally on the stud and flush such that the coach screw is centred over the joist or bearer below or full depth solid block between bearers

GIB HandiBrac® bracket

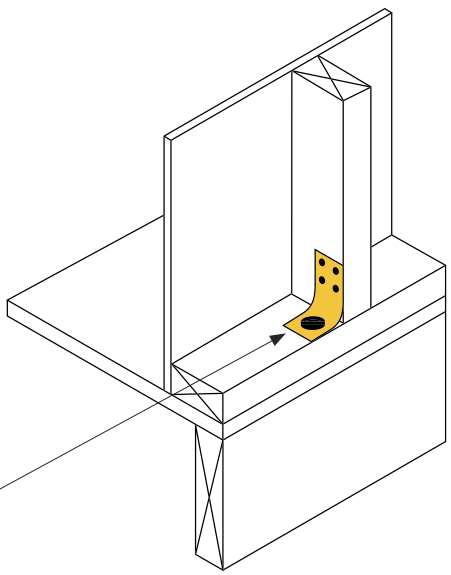

Figure 7
Timber floors
– external walls – GIB HandiBrac®

Locate the GIB HandiBrac® bracket flush such that the coach screw is centred over the joist or bearer below

GIB HandiBrac® bracket

PanelBrace systems specification NP-N (No Hold Downs)

SPECIFICATION CODE	MINIMUM LENGTH (M)	LINING REQUIREMENT	HOLD DOWNS
NP-N	0.6	9mm or 12mm GoldenEdge® Regular MDF to one side only	No

WALL FRAMING

Wall framing to comply with;

NZBC B1 Structure,
B1/AS1 Clause 3 Timber (NZS 3604:2011)

NZBC B2 Durability,
B2/AS1 Clause 3.2 Timber (NZS 3602).

Framing dimensions and height as determined by NZS 3604:2011 stud and top plate tables for load bearing and non-bearing walls.

The use of kiln dried stress graded timber or LVL is recommended.

BOTTOM PLATE FIXING

The bottom plate is fixed to the floor framing in accordance with NZS 3604: 2011 Table 8.19, which is either 2/100x3.75mm hand-driven nails or 3/90 x 3.15 mm power-driven nails, at maximum 600mm centres.

WALL LINING

GoldenEdge® Regular 9mm or 12mm MDF sheets are fixed vertically.

Adjoining sheets require an approximate 2mm gap between them to allow for movement.

Full sheets must be used wherever possible. Bracing panels must be fixed from top plate to bottom plate.

For wall heights over 2.4m, a part sheet can be stacked above a full sheet, butt joined on a single row of nogs with each sheet/part sheet independently nailed off as per the nail spacing below (e.g. 2.4m x 1.2m sheet with a 0.3m x 1.2m part sheet above it to give a 2.7m x 1.2m bracing element).

SHEET FASTENERS

- 40 x 2.8mm hot-dipped galvanised fibre cement nails
- 40 x 4.2mm (8 gauge), gold-passivated counter-sunk, coarse-thread woodscrews
- 1.6mm (16 gauge) 10.5mm crown, 35mm leg or longer, galvanised staples

Figure 8
NP-N (No Hold Downs) Fastener Pattern for Screws or Fibre Cement Nails

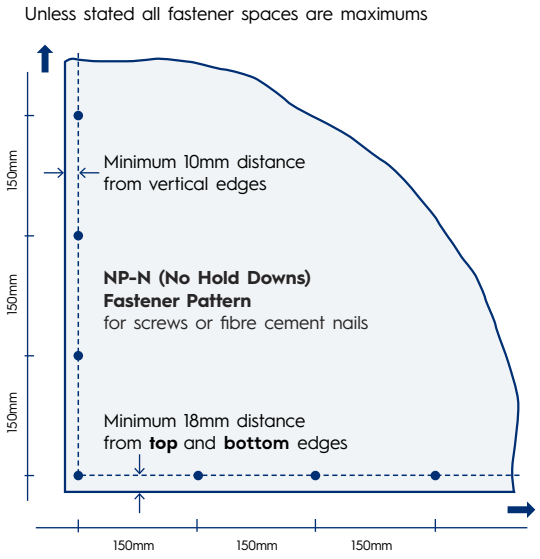

SCREWS OR NAILS FASTENING CENTERS

One in the corner then 150mm centres around the perimeter of the sheets and at 300mm centres to intermediate studs. Fixings must be no closer than 10mm from the sheet edge and no closer than 18mm from the top and bottom edges of the sheet. Fixings are driven at right angles to the sheet until the head is flush with the sheet surface for nail fixings or countersunk approximately 0.5mm for screw fixings. Fixings must not be over-driven.

Fixing to dwangs/nogging is not required.

See Figure 8

STAPLES FASTENING CENTERS

50, 100, 150, 225, 300mm maximum from each corner and 150mm there after around the perimeter of the bracing element, 300mm centres on the intermediate stud.

Fixings must be no closer than 10mm from the sheet edge and no closer than 18mm from the top and bottom edges of the sheet. Fixings are driven at right angles to the sheet. Driving pressure should be adjusted on the gun to allow crown penetration of approximately 0.5mm to allow for filling.

Fixing to dwangs/nogging is not required.

Figure 9
NP-N (No Hold Downs) Fastener Pattern for Staples

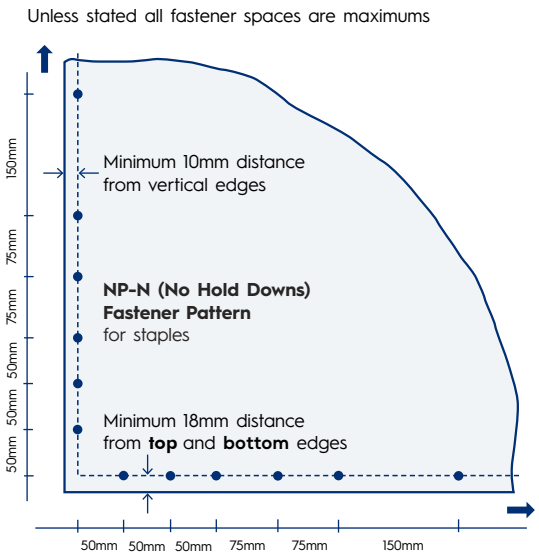

PanelBrace systems specification NP-H (With Hold Downs)

SPECIFICATION CODE	LINING REQUIREMENT	HOLD DOWNS
NP-H	9mm or 12mm GoldenEdge® Regular MDF to one side only	Yes

WALL FRAMING

Wall framing to comply with;

NZBC B1 Structure,
B1/AS1 Clause 3 Timber (NZS 3604:2011)

NZBC B2 Durability,
B2/AS1 Clause 3.2 Timber (NZS 3602)

Framing dimensions and height as determined by NZS 3604:2011 stud and top plate tables for load bearing and non-bearing walls.

The use of kiln dried stress graded timber or LVL is recommended.

BOTTOM PLATE FIXING

NP-H requires the use of hold downs. You can use either: GIB Handibrac® or a strap and use a hold down anchor. See pages 6 and 7 of this document for installation details.

Within the length of the bracing element, intermediate fixings to the bottom plate are to be in accordance with NZS 3604.

WALL LINING

GoldenEdge® Regular 9mm or 12mm MDF sheets are fixed vertically.

Adjoining sheets require an approximate 2mm gap between them to allow for movement.

Full sheets must be used wherever possible. Bracing panels must be fixed from top plate to bottom plate. For wall heights over 2.4m, a part sheet can be stacked above a full sheet, butt joined on a single row of nogs with each sheet/part sheet independently nailed off as per the nail spacing below(e.g. 2.4m x 1.2m sheet with a 0.3m x 1.2m part sheet above it to give a 2.7m x 1.2m bracing element)

SHEET FASTENERS

- 40 x 2.8mm hot-dipped galvanised fibre cement nails
- 40 x 4.2mm (8 gauge), gold-passivated counter-sunk, coarse-thread woodscrews
- 1.6mm (16 gauge) 32mm or longer galvanised Staples

Figure 10
NP-H (Hold Downs) Fastener Pattern for Screws or Fibre Cement Nails

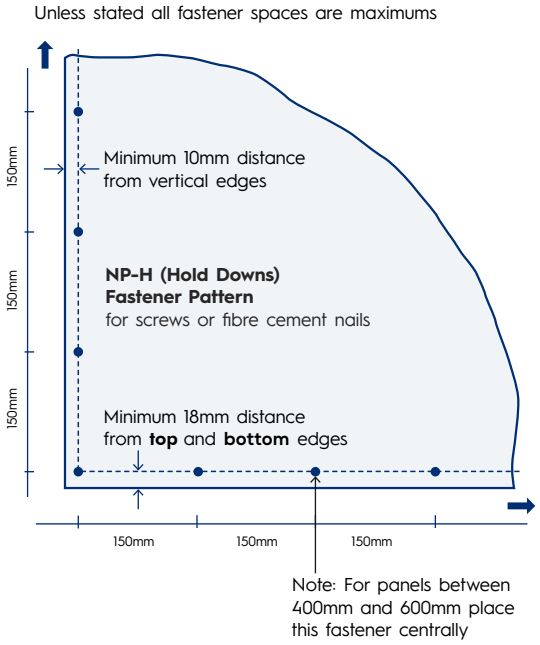

SCREWS OR NAILS FASTENING CENTERS

One in the corner then 150mm centres around the perimeter of the sheets and at 300mm centres to intermediate studs. Fixings must be no closer than 10mm from the sheet edge and no closer than 18mm from the top and bottom edges of the sheet. Fixings are driven at right angles to the sheet until the head is flush with the sheet surface for nail fixings or countersunk approximately 0.5mm for screw fixings. Fixings must not be over-driven.

Fixing to dwangs/nogging is not required.

See Figure 10

STAPLES FASTENING CENTERS

50, 100, 150, 225, 300mm maximum from each corner and 150mm there after around the perimeter of the bracing element, 300 centres on the intermediate stud.

Fixings must be no closer than 10mm from the sheet edge and no closer than 18mm from the top and bottom edges of the sheet. Fixings are driven at right angles to the sheet. Driving pressure should be adjusted on the gun to allow crown penetration of approximately 0.5mm to allow for filling.

See Figure 11

Figure 11
NP-H Fastener Pattern for Staples

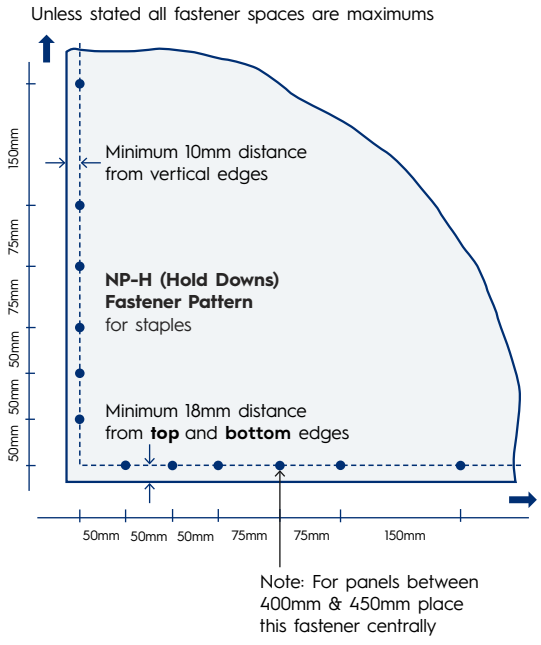

PanelBrace systems specification NPf-H (Finish Nails with Hold Downs)

SPECIFICATION CODE	LINING REQUIREMENT	HOLD DOWNS
NPf-H	9mm or 12mm GoldenEdge® Regular MDF to one side only fixed with finishing nails	Yes

WALL FRAMING

Wall framing to comply with;
NZBC B1 Structure,
B1/AS1 Clause 3 Timber (NZS 3604:2011)

NZBC B2 Durability,
B2/AS1 Clause 3.2 Timber (NZS 3602)

Framing dimensions and height as determined by NZS 3604:2011 stud and top plate tables for load bearing and non-bearing walls.

The use of kiln dried stress graded timber or LVL is recommended.

BOTTOM PLATE FIXING

NPf-H requires the use of hold downs. You can use either: GIB Handibrac® or a strap and use a hold down anchor. See pages 6 and 7 of this document for installation details.

Within the length of the bracing element, intermediate fixings to the bottom plate are to be in accordance with NZS 3604.

WALL LINING

GoldenEdge® Regular 9mm or 12mm MDF sheets are fixed vertically.

Adjoining sheets require an approximate 2mm gap between them to allow for movement.

Full sheets must be used wherever possible. Bracing panels must be fixed from top plate to bottom plate.

For wall heights over 2.4m, a part sheet can be stacked above a full sheet, butt joined on a single row of nogs with each sheet/part sheet independently nailed off as per the nail spacing below(e.g. 2.4m x 1.2m sheet with a 0.3m x 1.2m part sheet above it to give a 2.7m x 1.2m bracing element).

SHEET FASTENERS

- 1.6mm (16 gauge) 32mm or longer finish nails

Figure 12
NPf-H Fastener Pattern for Finishing Nails

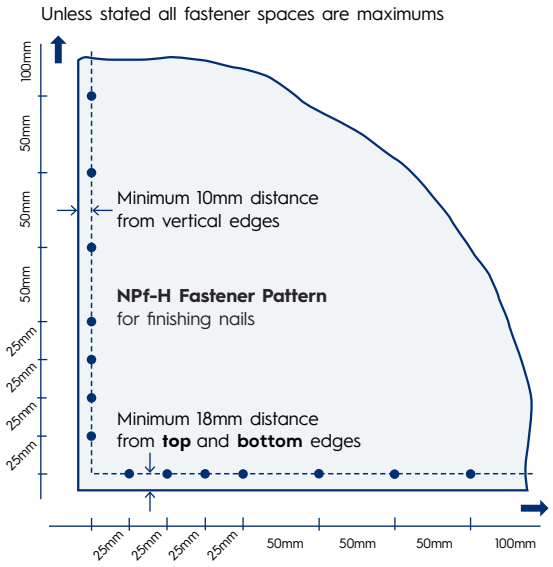

NAILS FASTENING CENTERS

25, 50, 75, 100, 150, 200, 250mm from each corner and 100mm centres thereafter around the perimeter. 150mm centres on the intermediate stud.

Fixings must be no closer than 10mm from the sheet edge and no closer than 18mm from the top and bottom edges of the sheet. Fixings are driven at right angles to the sheet. Driving pressure should be adjusted on the gun to allow nail head penetration of approximately 0.5mm to allow for filling.

Fixing to dwangs/nogging is not required.

See Figure 12

PanelBrace systems specification NPG2-H (2-Sided GIB®+MDF with Hold Downs)

SPECIFICATION CODE	LINING REQUIREMENT	HOLD DOWNS
NPG2-H	9 or 12mm GoldenEdge® Regular MDF one side of framing, any 10 or 13mm GIB® plasterboard lining the other	Yes

FRAMING AND MDF SIDE FIXING

Framing, plate fixing, wall lining, fastners and spacings for MDF side as per NP-H above (page 10 and 11).

GIB® SIDE

As per GSP-H SPECIFICATION page 27 In the GIB® EasyBrace Systems and Specifications and Installation Manual, dated August 2016.

WALL LINING

- A layer of 10mm or 13mm GIB® plasterboard to one side of the wall plus 9mm or 12mm GoldenEdge® Regular MDF on the other side
- GIB® Sheets can be fixed vertically or horizontally, with edges supported.
- GIB® Sheet joints shall be touch fitted.
- Use full length sheets where possible.

PERMITTED ALTERNATIVES

For permitted GIB® plasterboard alternatives refer to p. 5 in GIB EzyBrace® Systems literature.

FASTENING THE LINING

Fasteners for GIB® side

32mm x 6g GIB® Grabber® High Thread Screws, 32mm x 7g GIB® Grabber® Dual Thread Screws or 30mm GIB® Nails.

If using the GIBFix® Framing System or if fastening through GIBFix® Angles use only 32mm x 7g GIB® Grabber® Dual Thread Screws.

FASTENER CENTRES

GIB® plasterboard side: 50, 100, 150, 225, 300mm maximum from each corner and 150mm thereafter around the perimeter of the bracing element. For vertically fixed sheets place fasteners at 300mm maximum centres to the intermediate sheet joints.

For horizontally fixed sheets place single fasteners to the sheet edge where it crosses the stud. Use daubs of GIBFix® adhesive at 300mm maximum centres to intermediate studs. Place fasteners no closer than 12mm from paper bound sheet edges and 18mm from any sheet end or cut edge.

See Figure 13.

JOINTING

Joint strength is important in delivering bracing system performance. All fastener heads stopped and all sheet joints GIB® Joint Tape reinforced and stopped in accordance with the GIB® Site Guide.

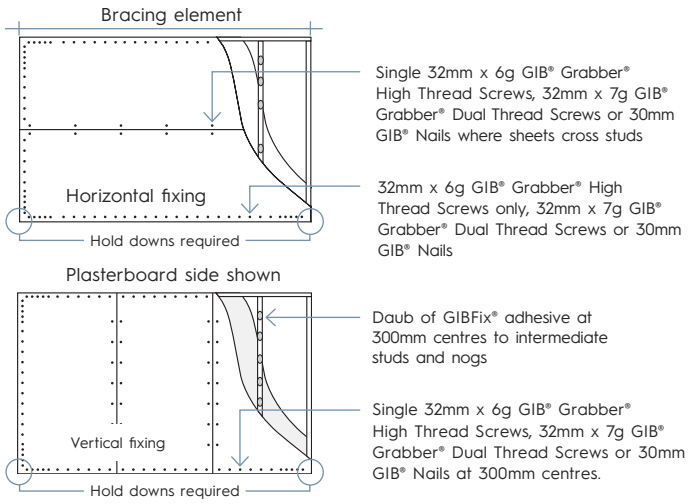

Figure 13
NPG2-H Fastener Pattern

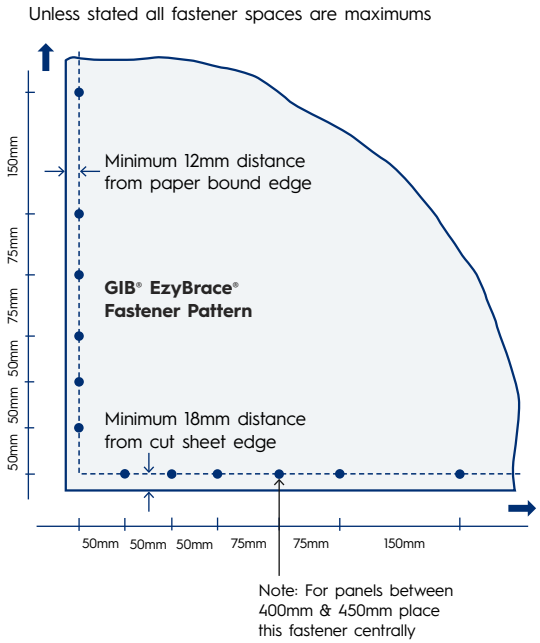

NELSON PINE INDUSTRIES LTD
PO Box 3049, Richmond,
Nelson, New Zealand 7050
Phone: 03 543 8800 or 0800 800 438
Website: www.nelsonpine.co.nz

PanelBrace systems specification NPs-H (Steel Frame with Hold Downs)

SPECIFICATION CODE	LINING REQUIREMENT	HOLD DOWNS
NPs-H	9mm or 12mm GoldenEdge® Regular MDF to one side only for steel framing	Yes

WALL FRAMING

Wall framing to comply with, NZBC B1 Structure, NZBC B2 Durability. Steel framing to be in accordance with NASH Standard Part Two: May 2019 Light Steel Framed Buildings. C section studs shall have a minimum thickness of 0.75mm and minimum nominal depth of 87mm with 35mm wide flanges.

BOTTOM PLATE FIXING

Timber floor

50 X 50 x 3mm washer, fixed to timber floor framing using a 12mm x 100mm galvanized coach screw.

Concrete floor

50 X 50 x 3mm washer, fixed to the concrete slab using a proprietary concrete anchor with a minimum uplift capacity of 12kN taking into consideration concrete slab thickness (internal walls) and edge distance (external walls.

WALL LINING

GoldenEdge® Regular 9mm or 12mm MDF sheets are fixed vertically.

Adjoining sheets require an approximate 2mm gap between them to allow for movement.

Full sheets must be used wherever possible. Bracing panels must be fixed from top plate to bottom plate.

For wall heights over 2.4m, a part sheet can be stacked above a full sheet, butt joined on a single row of nogs with each sheet/part sheet independently screwed off as per the spacing below(e.g. 2.4m x 1.2m sheet with a 0.3m x 1.2m part sheet above it to give a 2.7m x 1.2m bracing element).

SHEET FASTENERS

Self drilling screws with countersunk heads at least 25mm long and 6 or higher gauge. These should be galvanised or gold-passivated.

FASTENING TO METAL STUDS

Clean the steel of any residual oil using a solvent on a rag to ensure a good bond with adhesive. Apply panel adhesive at maximum 300mm centres to intermediate studs. Adhesive should not be applied to sheet edges or under screws.

The correct sequence of attaching the MDF panel is critical as the face of a steel stud can deflect initially. The first sheet is attached to the open side of the stud which will cause minor deflection but will pull back tight against the sheet when the screw is fully tightened.

When the second sheet is fixed there will be minimal deflection as the open flange is now supported by the previous sheet. Support the stud to avoid twisting. See figure 14

Figure 14
NPs-H Fastening to steel frame

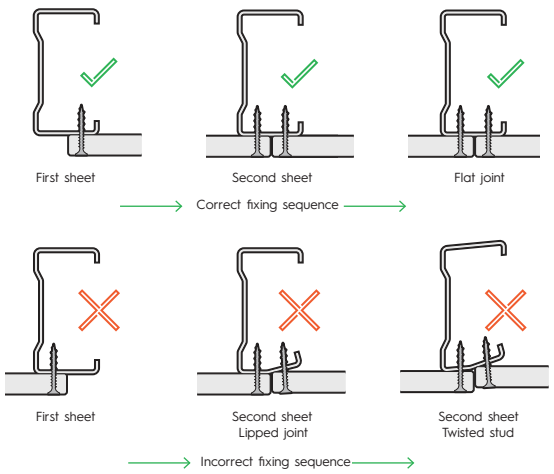

Figure 15
NPs-H (Steel Frame)Fastener Pattern for Screws

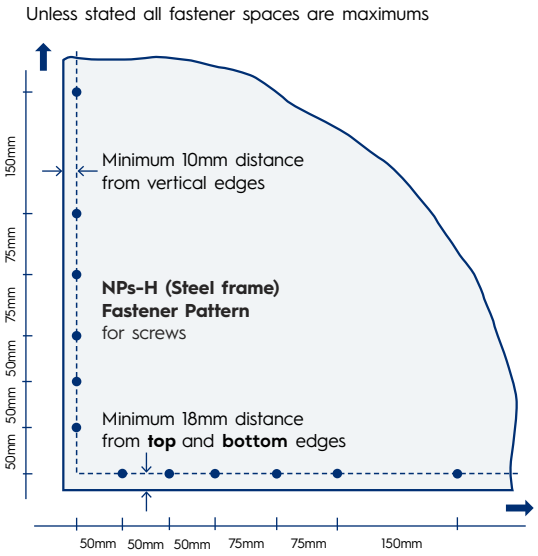

SCREW FASTENING CENTERS

50, 100, 150, 225, 300mm from each corner and 150mm centres thereafter around the perimeter. 300 centres on the intermediate stud.

Fixings must be no closer than 10mm from the sheet edge and no closer than 18mm from the top and bottom edges of the sheet. Fixings are driven at right angles to the sheet and countersunk approximately 0.5mm.

See Figure 15

NELSON PINE INDUSTRIES LTD

PO Box 3049, Richmond,
Nelson, New Zealand 7050

Phone: 03 543 8800 or 0800 800 438

Website: www.nelsonpine.co.nz

GoldenEdge, Tree Device and Panelbrace are tradenames
and trademarks of Nelson Pine Industries Ltd

MS 22012/NOVEMBER 2018