RI925 VERTICAL WALL CLADDING ON TIMBER FRAMING
SILL FLASHING ON CAVITY (WINDOW/DOOR) OPTION 2

Detail Number: RI-R925VWC-140C
Date drawn: 14/10/2026
Scale: 1 : 5@ A4

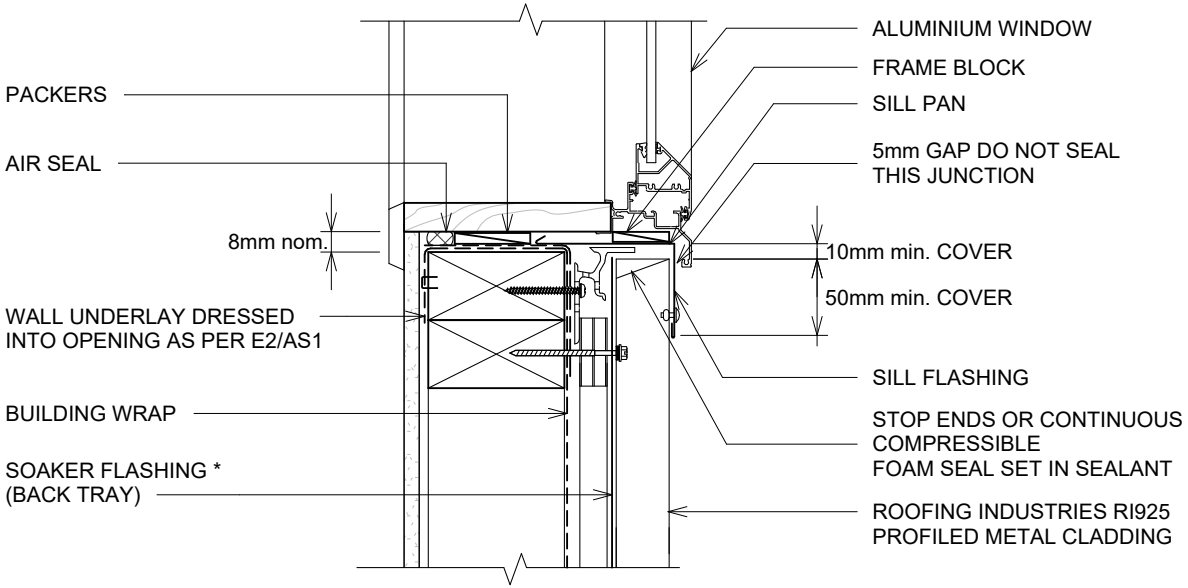

DETAIL ANNOTATION:

1. REFER TO E2/AS1 FOR GENERAL WINDOW OPENING FOR WRAPPING OF FRAMED OPENING PRIOR TO WINDOW INSTALLATION.
2. ARCHITRAVE'S ARE SHOWN FOR CONSISTENCY ONLY, DETAIL MAY BE USED WITH REBATED LINER.
3. LIAISE WITH WINDOW MANUFACTURER PRIOR TO INSTALLATION
4. CASTELLATED BATTEN, DRAINAGE PLASTIC BATTEN OR APPROVED DRAINED BATTEN CAN BE USED WITH THIS SYSTEM.
5. REFER TO WINDOW MANUFACTURER REGARDING SUPPORT BARS REQUIREMENTS AND DETAILS ETC.
6. TIMBER OR PACKERS CONTAINING CORROSIVE MATERIAL MUST BE SEPARATED FROM METAL CLADDING BY DPC, BUILDING WRAP PVC OR PAINTING.
7. ALTERNATIVELY REFER TO E2/AS1.
8. REFER TO UNDERLAY MANUFACTURERS REQUIREMENTS FOR INSTALLATION RECOMMENDATIONS.
9. JOINERY AND JOINERY FLASHING INTERFACE IS INDICATIVE ONLY. REFER TO SELECTED JOINERY MANUFACTURER'S RECOMMENDATIONS AND DETAILS.

Sill flashings stop ended to receive jamb flashings (Dimensions are indicative only & show minimum lap covers)

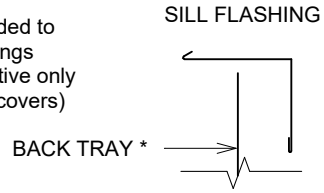

* Back tray size may require to increase to ensure coverage at ends of head flashings. Back Tray to run from top of head flashing to ground or exit point. * (Dimensions are indicative only) * Turn down end of head flashing

GENERAL NOTES:

- These details to be read with Roofing Industries RI925 Product Technical Statement and Installation Guide.
- The building designer is ultimately responsible to ensure that the details used meet the requirements of the NZ Building Code for the specific project.
- Details of the supporting structure (including cavity battens if used) are indicative only and are the responsibility of the building designer. For steel framed buildings thermal break cavity battens may be required.
- Roof/wall underlay selection are the responsibility of the designer. Underlay to be installed in accordance with underlay manufacturer's recommendations and requirements.
- These details are for Roofing Industries profile/s as nominated and may not be applicable to other profiles.
- This drawing is the copyright of 'Roofing Industries' and can only be copied or reproduced with their permission.
- Further information can be obtained from the NZ Metal Roof & Wall Cladding Code of Practice: www.metalroofing.org.nz or E2/AS1 where applicable.
- Details are for steel-based materials, other substrates may require some changes.
- All dimensions are nominal.
- Fixing: The designer needs to check the screw manufacturers technical data of the selected screw type for the design wind load and the material being fastened to.

Copyright detail © 2026

Roofing Industries
roof.co.nz