RI925 VERTICAL WALL CLADDING ON TIMBER FRAMING
SHEET LIST

Detail Number: RI-R925VWC-00A
Date drawn: 14/10/2026
Scale: @ A3

RI925 VERTICAL WALL CLADDING ON TIMBER FRAMING		
Sheet Number	Type	Sheet Name
RI-R925VWC-00A	RI925 VERTICAL WALL CLADDING ON TIMBER FRAMING	SHEET LIST
RI-R925VWC-00B	RI925 VERTICAL WALL CLADDING ON TIMBER FRAMING	PROFILES & ACCESSORIES
RI-R925VWC-00C	RI925 VERTICAL WALL CLADDING ON TIMBER FRAMING	PROFILE SUMMARY
RI-R925VWC-010	RI925 VERTICAL WALL CLADDING ON TIMBER FRAMING	BARGE DETAIL ON CAVITY
RI-R925VWC-020	RI925 VERTICAL WALL CLADDING ON TIMBER FRAMING	HEAD BARGE ON CAVITY
RI-R925VWC-030A	RI925 VERTICAL WALL CLADDING ON TIMBER FRAMING	STANDARD EXTERNAL CORNER ON CAVITY
RI-R925VWC-030B	RI925 VERTICAL WALL CLADDING ON TIMBER FRAMING	EXTERNAL CORNER ON CAVITY WITH CLADDING CHANGE
RI-R925VWC-040A	RI925 VERTICAL WALL CLADDING ON TIMBER FRAMING	STANDARD INTERNAL CORNER ON CAVITY
RI-R925VWC-040B	RI925 VERTICAL WALL CLADDING ON TIMBER FRAMING	INTERNAL CORNER WITH CLADDING CHANGE
RI-R925VWC-050	RI925 VERTICAL WALL CLADDING ON TIMBER FRAMING	BOTTOM OF CLADDING ON CAVITY
RI-R925VWC-060	RI925 VERTICAL WALL CLADDING ON TIMBER FRAMING	SOFFIT FLASHING ON CAVITY
RI-R925VWC-070	RI925 VERTICAL WALL CLADDING ON TIMBER FRAMING	SLOPING SOFFIT FLASHING ON CAVITY
RI-R925VWC-090	RI925 VERTICAL WALL CLADDING ON TIMBER FRAMING	VERTICAL BUTT JOINT ON CAVITY WITH CLADDING CHANGE (CAVITY)
RI-R925VWC-100	RI925 VERTICAL WALL CLADDING ON TIMBER FRAMING	JUNCTION FLASHING ON CAVITY
RI-R925VWC-110	RI925 VERTICAL WALL CLADDING ON TIMBER FRAMING	BALUSTRADE ON CAVITY
RI-R925VWC-120A	RI925 VERTICAL WALL CLADDING ON TIMBER FRAMING	HEAD FLASHING ON CAVITY (RECESSED WINDOW/DOOR) OPTION 1
RI-R925VWC-120B	RI925 VERTICAL WALL CLADDING ON TIMBER FRAMING	JAMB FLASHING ON CAVITY (RECESSED WINDOW/DOOR) OPTION 1
RI-R925VWC-120C	RI925 VERTICAL WALL CLADDING ON TIMBER FRAMING	SILL FLASHING ON CAVITY (RECESSED WINDOW/DOOR) OPTION 1
RI-R925VWC-120D	RI925 VERTICAL WALL CLADDING ON TIMBER FRAMING	ISOMETRIC FLASHING LAYOUT ON CAVITY (RECESSED WINDOW/DOOR) OPTION 1
RI-R925VWC-130A	RI925 VERTICAL WALL CLADDING ON TIMBER FRAMING	HEAD FLASHING ON CAVITY (RECESSED WINDOW/DOOR) OPTION 2
RI-R925VWC-130B	RI925 VERTICAL WALL CLADDING ON TIMBER FRAMING	JAMB FLASHING ON CAVITY (RECESSED WINDOW/DOOR) OPTION 2
RI-R925VWC-130C	RI925 VERTICAL WALL CLADDING ON TIMBER FRAMING	SILL FLASHING ON CAVITY (RECESSED WINDOW/DOOR) OPTION 2
RI-R925VWC-130D	RI925 VERTICAL WALL CLADDING ON TIMBER FRAMING	ISOMETRIC FLASHING LAYOUT ON CAVITY (RECESSED WINDOW/DOOR) OPTION 2
RI-R925VWC-140A	RI925 VERTICAL WALL CLADDING ON TIMBER FRAMING	HEAD FLASHING ON CAVITY (WINDOW/DOOR) OPTION 2
RI-R925VWC-140B	RI925 VERTICAL WALL CLADDING ON TIMBER FRAMING	JAMB FLASHING ON CAVITY (WINDOW/DOOR) OPTION 2
RI-R925VWC-140C	RI925 VERTICAL WALL CLADDING ON TIMBER FRAMING	SILL FLASHING ON CAVITY (WINDOW/DOOR) OPTION 2
RI-R925VWC-140D	RI925 VERTICAL WALL CLADDING ON TIMBER FRAMING	ISOMETRIC FLASHING LAYOUT ON CAVITY (WINDOW/DOOR) OPTION 2
RI-R925VWC-150A	RI925 VERTICAL WALL CLADDING ON TIMBER FRAMING	METER BOX HEAD FLASHING ON CAVITY
RI-R925VWC-150B	RI925 VERTICAL WALL CLADDING ON TIMBER FRAMING	METER BOX SIDE FLASHING ON CAVITY
RI-R925VWC-150C	RI925 VERTICAL WALL CLADDING ON TIMBER FRAMING	METER BOX BASE FLASHING ON CAVITY

Copyright detail © 2026

Roofing Industries
roof.co.nz

RI925 VERTICAL WALL CLADDING ON TIMBER FRAMING
PROFILES & ACCESSORIES

Detail Number: RI-R925VWC-00B
Date drawn: 14/10/2026
Scale: 1 : 5@ A3

ROOFING INDUSTRIES
RI925

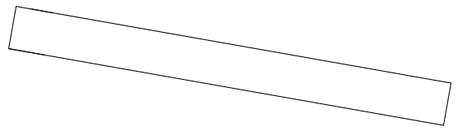

ROOFING INDUSTRIES
BARGE FLASHING

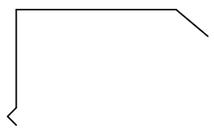

ROOFING INDUSTRIES
BARGE/PARAPET
CAPPING

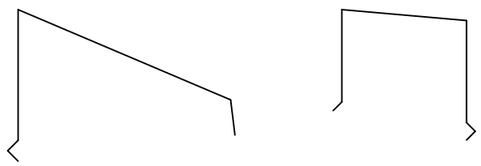

ROOFING INDUSTRIES
CHANGE IN PITCH
FLASHING

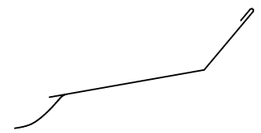

ROOFING INDUSTRIES
GUTTER APRON
FLASHING

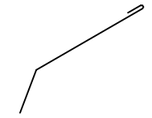

ROOFING INDUSTRIES
RI925

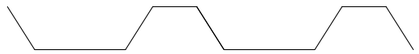

ROOFING INDUSTRIES
RIDGE FLASHING

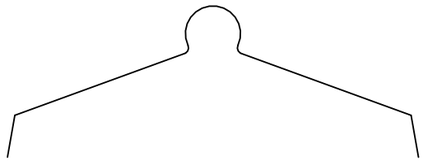

ROOFING INDUSTRIES
APRON FLASHING



HEAD FLASHING



ROOFING INDUSTRIES
COVER FLASHING



ROOFING INDUSTRIES
SOFFIT FLASHING



FIXINGS

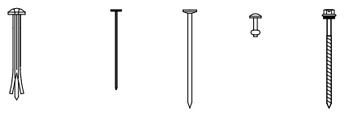

HEAD FLASHING



ALTERNATIVE HEAD
FLASHING (OPTION 1)

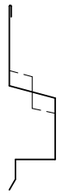

ALTERNATIVE HEAD
FLASHING (OPTION 2)

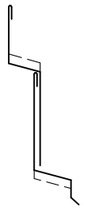

JAMB FLASHING

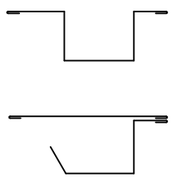

ALTERNATIVE JAMB
FLASHING (OPTION 1)

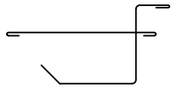

ALTERNATIVE JAMB
FLASHING (OPTION 2)

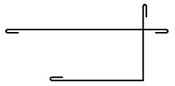

CAVITY CLOSER



METAL ANGLE



ROOFING INDUSTRIES
METER BOX BASE
FLASHING



ROOFING INDUSTRIES
CLADDING CHANGE/JAMB
FLASHING



SILL FLASHING

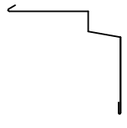

SILL FLASHING
(OPTION 1)



ROOFING INDUSTRIES
CORNER FLASHING

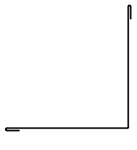

ROOFING INDUSTRIES
INTERNAL CORNER

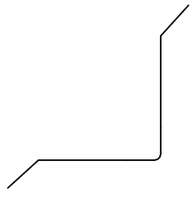

ROOFING INDUSTRIES
EXTERNAL CORNER

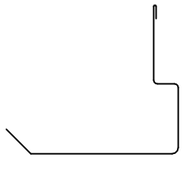

ROOFING INDUSTRIES
VERTICAL BUTT JOINT
FLASHING



ROOFING INDUSTRIES
CLADDING BASE
FLASHING



Copyright detail © 2026

Roofing Industries
roof.co.nz

RI925 VERTICAL WALL CLADDING ON TIMBER FRAMING
PROFILE SUMMARY

Detail Number: RI-R925VWC-00C
Date drawn: 14/10/2026
Scale: 1 : 5@ A4

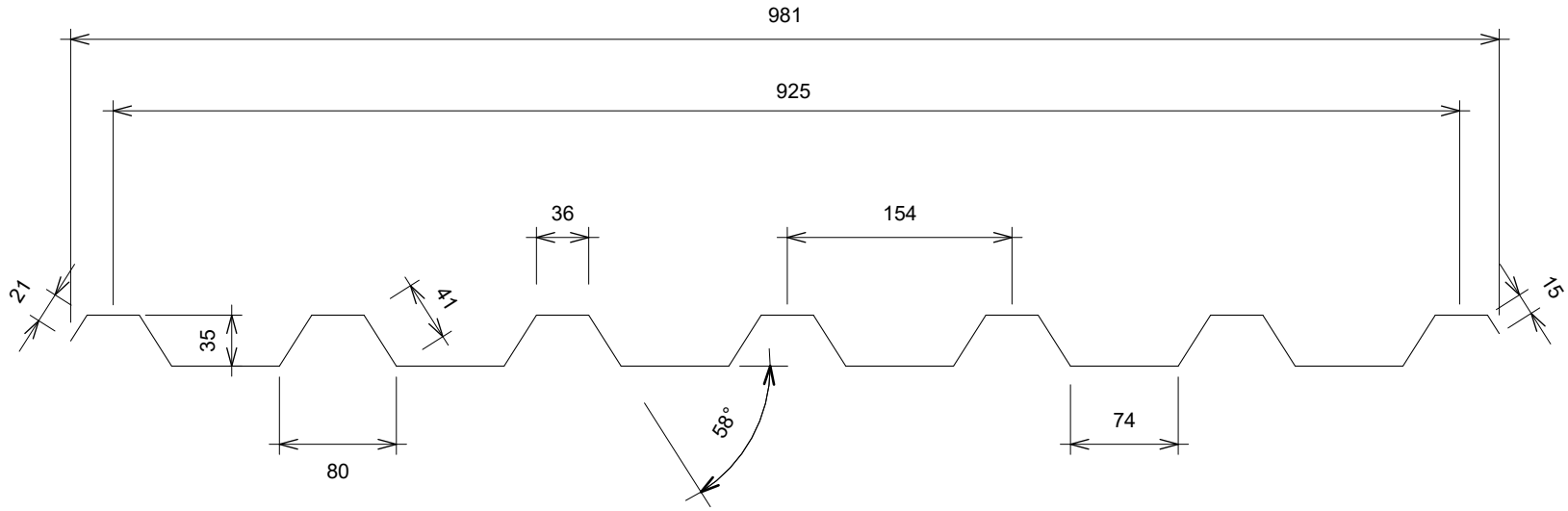

GENERAL NOTES:

- These details to be read with Roofing Industries RI925 Product Technical Statement and Installation Guide.
- The building designer is ultimately responsible to ensure that the details used meet the requirements of the NZ Building Code for the specific project.
- Details of the supporting structure (including cavity battens if used) are indicative only and are the responsibility of the building designer. For steel framed buildings thermal break cavity battens may be required.
- Roof/wall underlay selection are the responsibility of the designer. Underlay to be installed in accordance with underlay manufacturer's recommendations and requirements.
- These details are for Roofing Industries profile/s as nominated and may not be applicable to other profiles.
- This drawing is the copyright of 'Roofing Industries' and can only be copied or reproduced with their permission.
- Further information can be obtained from the NZ Metal Roof & Wall Cladding Code of Practice: www.metalroofing.org.nz or E2/AS1 where applicable.
- Details are for steel-based materials, other substrates may require some changes.
- All dimensions are nominal.
- Fixing: The designer needs to check the screw manufacturers technical data of the selected screw type for the design wind load and the material being fastened to.

Copyright detail © 2026

Roofing Industries
roof.co.nz

RI925 VERTICAL WALL CLADDING ON TIMBER FRAMING
BARGE DETAIL ON CAVITY

Detail Number: RI-R925VWC-010
Date drawn: 14/10/2026
Scale: 1 : 5@ A4

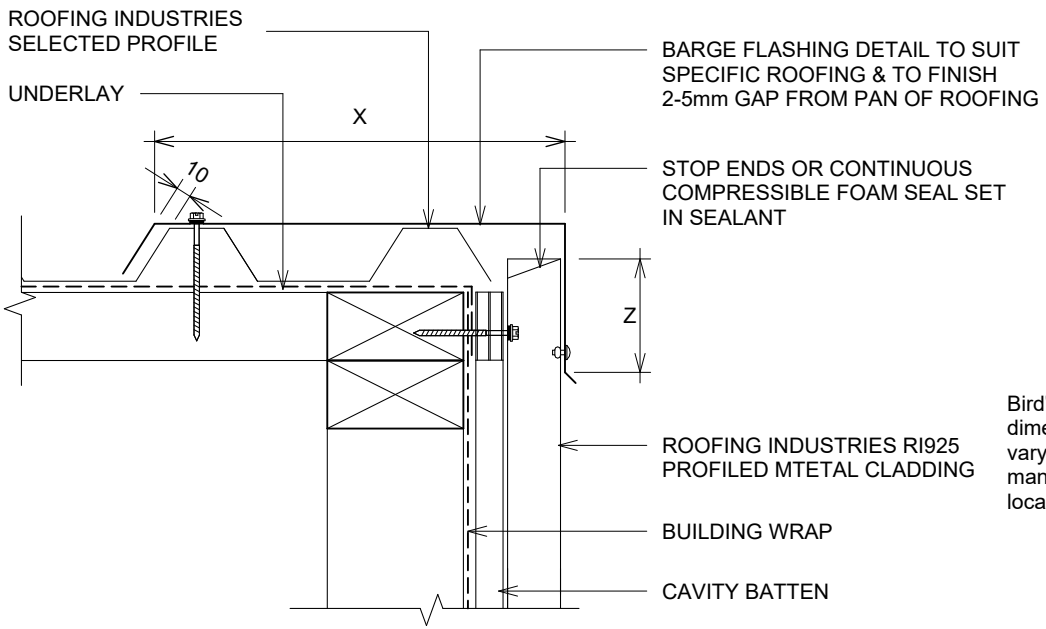

SITE WIND ZONE (As per NZS3604)	MINIMUM Z (2)	MINIMUM X
SITUATION 1 (1)	50mm	2 crests
SITUATION 2 (1)	70mm	2 crests
SITUATION 3 (1)	90mm	2 crests

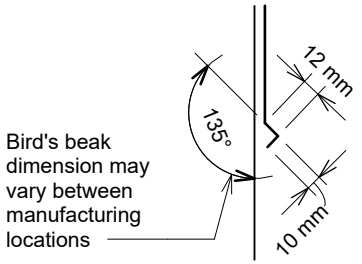

BIRD'S BEAK at bottom
edge of vertical flashing

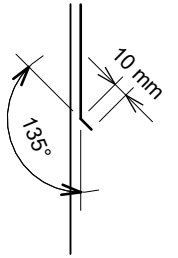

KICK-OUT at bottom
edge of vertical flashing

DETAIL ANNOTATION:

1. SITUATION 1, 2 & 3 AS PER E2/AS1 TABLE 4.5.1.1
2. EXCLUDING DRIP EDGE.
3. TIMBER OR PACKERS CONTAINING CORROSIVE MATERIAL MUST BE SEPARATED FROM METAL CLADDING BY DPC, BUILDING WRAP PVC OR PAINTING.
4. FASTENERS TO BE COMPATIBLE WITH MATERIAL BEING FIXED AND THE SUITABLE GRADE FOR THE ENVIRONMENT IN WHICH LOCATED.
5. CASTELLATED BATTEN, DRAINAGE PLASTIC BATTEN OR APPROVED DRAINED BATTEN CAN BE USED WITH THIS SYSTEM.
6. REFER TO UNDERLAY MANUFACTURERS REQUIREMENTS FOR INSTALLATION RECOMMENDATIONS.
7. A FULL HEIGHT TURNUP CONSTITUTES A CREST.

GENERAL NOTES:

- These details to be read with Roofing Industries RI925 Product Technical Statement and Installation Guide.
- The building designer is ultimately responsible to ensure that the details used meet the requirements of the NZ Building Code for the specific project.
- Details of the supporting structure (including cavity battens if used) are indicative only and are the responsibility of the building designer. For steel framed buildings thermal break cavity battens may be required.
- Roof/wall underlay selection are the responsibility of the designer. Underlay to be installed in accordance with underlay manufacturer's recommendations and requirements.
- These details are for Roofing Industries profile/s as nominated and may not be applicable to other profiles.
- This drawing is the copyright of 'Roofing Industries' and can only be copied or reproduced with their permission.
- Further information can be obtained from the NZ Metal Roof & Wall Cladding Code of Practice: www.metalroofing.org.nz or E2/AS1 where applicable.
- Details are for steel-based materials, other substrates may require some changes.
- All dimensions are nominal.
- Fixing: The designer needs to check the screw manufacturers technical data of the selected screw type for the design wind load and the material being fastened to.

Copyright detail © 2026

Roofing Industries
roof.co.nz

RI925 VERTICAL WALL CLADDING ON TIMBER FRAMING
HEAD BARGE ON CAVITY

Detail Number: RI-R925VWC-020
Date drawn: 14/10/2026
Scale: 1 : 5@ A4

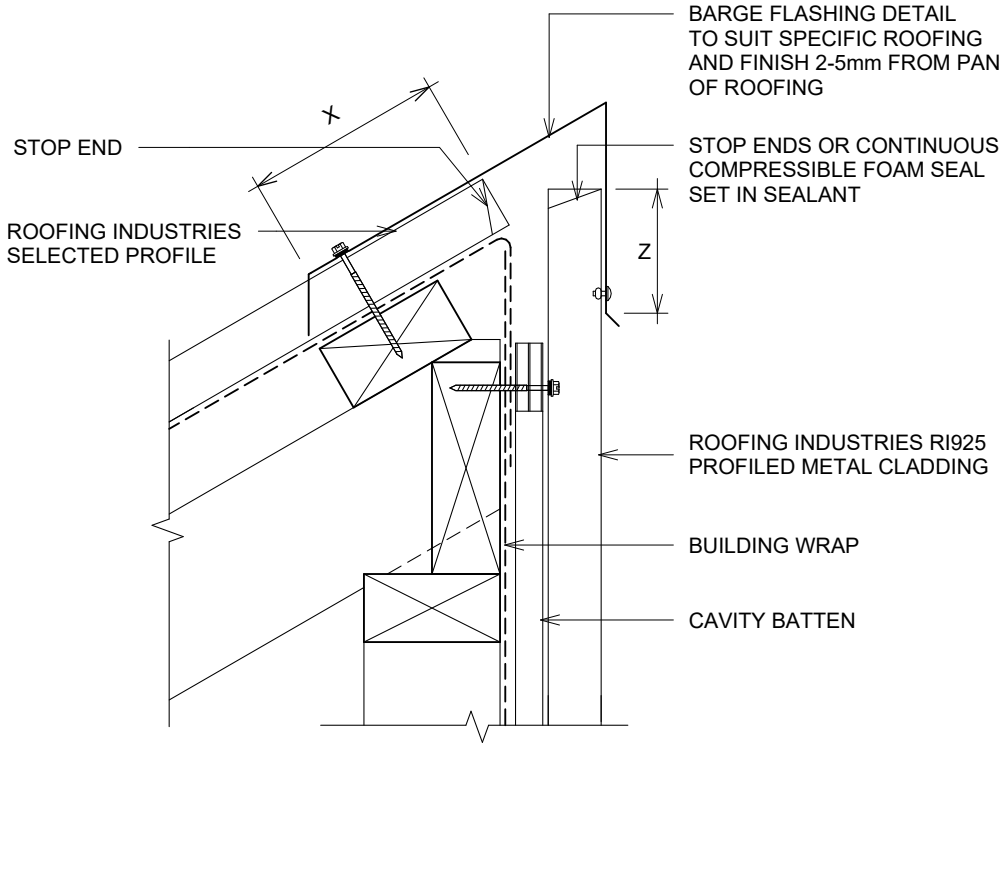

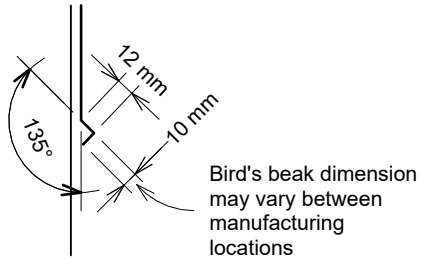

BIRD'S BEAK at bottom edge of vertical flashing

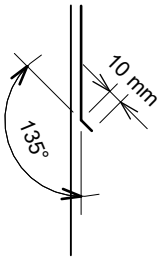

KICK-OUT at bottom edge of vertical flashing

SITE WIND ZONE (As per NZS3604)	MINIMUM	
	Z (2)	X
SITUATION 1 (1)	50mm	130mm
SITUATION 2 (1)	70mm	200mm
SITUATION 3 (1)	90mm	200mm

DETAIL ANNOTATION:

1. SITUATION 1, 2 & 3 AS PER E2/AS1 TABLE 4.5.1.1
2. EXCLUDING DRIP EDGE.
3. TIMBER OR PACKERS CONTAINING CORROSIVE MATERIAL MUST BE SEPARATED FROM METAL CLADDING BY DPC, BUILDING WRAP PVC OR PAINTING.
4. FASTENERS TO BE COMPATIBLE WITH MATERIAL BEING FIXED AND THE SUITABLE GRADE FOR THE ENVIRONMENT IN WHICH LOCATED.
5. CASTELLATED BATTEN, DRAINAGE PLASTIC BATTEN OR APPROVED DRAINED BATTEN CAN BE USED WITH THIS SYSTEM.
6. REFER TO UNDERLAY MANUFACTURERS REQUIREMENTS FOR INSTALLATION RECOMMENDATIONS.

GENERAL NOTES:

- These details to be read with Roofing Industries RI925 Product Technical Statement and Installation Guide.
- The building designer is ultimately responsible to ensure that the details used meet the requirements of the NZ Building Code for the specific project.
- Details of the supporting structure (including cavity battens if used) are indicative only and are the responsibility of the building designer. For steel framed buildings thermal break cavity battens may be required.
- Roof/wall underlay selection are the responsibility of the designer. Underlay to be installed in accordance with underlay manufacturer's recommendations and requirements.
- These details are for Roofing Industries profile/s as nominated and may not be applicable to other profiles.
- This drawing is the copyright of 'Roofing Industries' and can only be copied or reproduced with their permission.
- Further information can be obtained from the NZ Metal Roof & Wall Cladding Code of Practice: www.metalroofing.org.nz or E2/AS1 where applicable.
- Details are for steel-based materials, other substrates may require some changes.
- All dimensions are nominal.
- Fixing: The designer needs to check the screw manufacturers technical data of the selected screw type for the design wind load and the material being fastened to.

Copyright detail © 2026

Roofing Industries
roof.co.nz

RI925 VERTICAL WALL CLADDING ON TIMBER FRAMING
STANDARD EXTERNAL CORNER ON CAVITY

Detail Number: RI-R925VWC-030A
Date drawn: 14/10/2026
Scale: 1 : 5@ A4

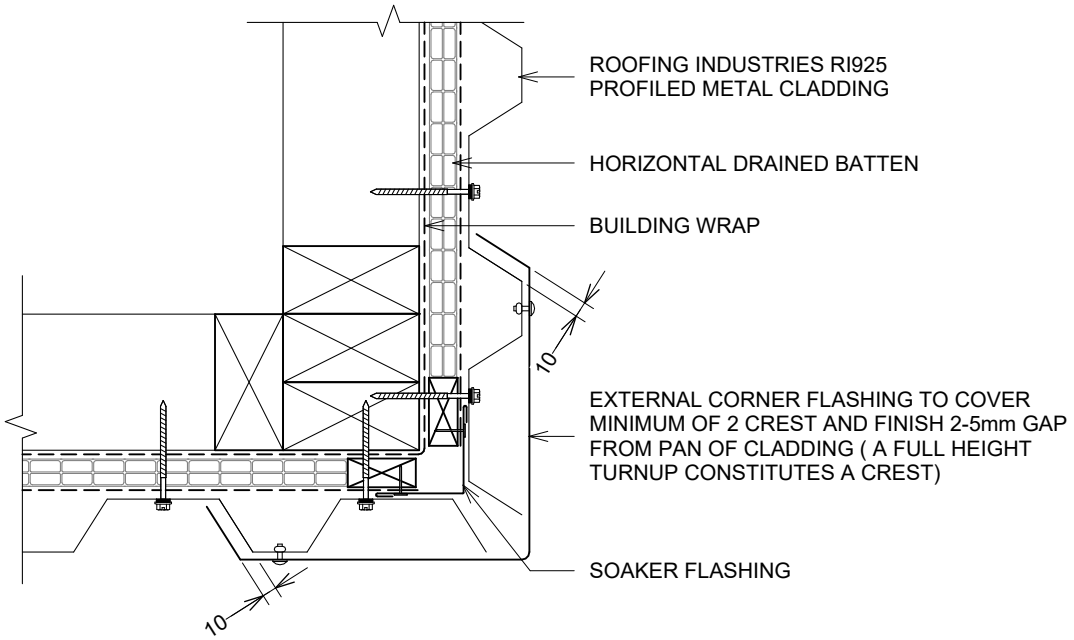

DETAIL ANNOTATION:

1. TIMBER OR PACKERS CONTAINING CORROSIVE MATERIAL MUST BE SEPARATED FROM METAL CLADDING BY DPC, BUILDING WRAP PVC OR PAINTING.
2. CASTELLATED BATTEN, DRAINAGE PLASTIC BATTEN OR APPROVED DRAINED BATTEN CAN BE USED WITH THIS SYSTEM.
3. FASTENERS TO BE COMPATIBLE WITH MATERIAL BEING FIXED AND THE SUITABLE GRADE FOR THE ENVIRONMENT IN WHICH LOCATED.
4. REFER TO UNDERLAY MANUFACTURERS REQUIREMENTS FOR INSTALLATION RECOMMENDATIONS.

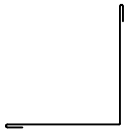

GENERAL NOTES:

- These details to be read with Roofing Industries RI925 Product Technical Statement and Installation Guide.
- The building designer is ultimately responsible to ensure that the details used meet the requirements of the NZ Building Code for the specific project.
- Details of the supporting structure (including cavity battens if used) are indicative only and are the responsibility of the building designer. For steel framed buildings thermal break cavity battens may be required.
- Roof/wall underlay selection are the responsibility of the designer. Underlay to be installed in accordance with underlay manufacturer's recommendations and requirements.
- These details are for Roofing Industries profile/s as nominated and may not be applicable to other profiles.
- This drawing is the copyright of 'Roofing Industries' and can only be copied or reproduced with their permission.
- Further information can be obtained from the NZ Metal Roof & Wall Cladding Code of Practice: www.metalroofing.org.nz or E2/AS1 where applicable.
- Details are for steel-based materials, other substrates may require some changes.
- All dimensions are nominal.
- Fixing: The designer needs to check the screw manufacturers technical data of the selected screw type for the design wind load and the material being fastened to.

Copyright detail © 2026

Roofing Industries
roof.co.nz

RI925 VERTICAL WALL CLADDING ON TIMBER FRAMING
EXTERNAL CORNER ON CAVITY WITH CLADDING CHANGE

Detail Number: RI-R925VWC-030B
Date drawn: 14/10/2026
Scale: 1 : 5@ A4

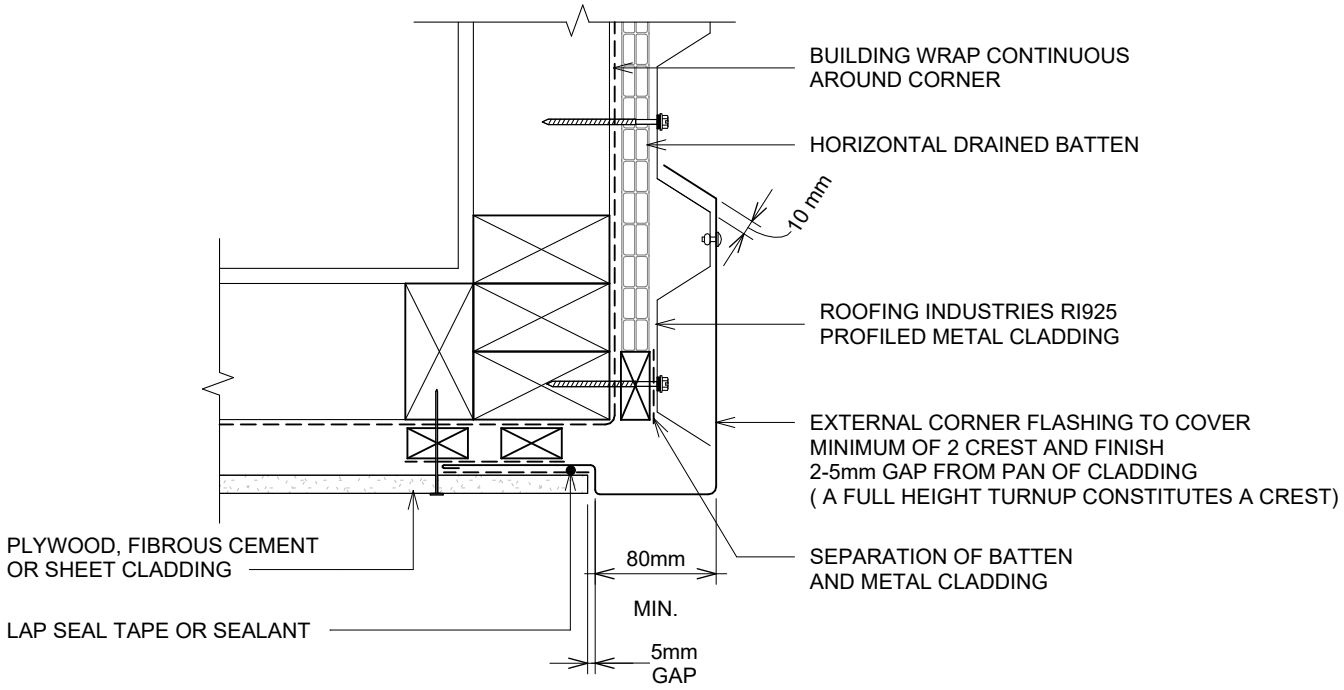

DETAIL ANNOTATION:

1. TIMBER OR PACKERS CONTAINING CORROSIVE MATERIAL MUST BE SEPARATED FROM METAL CLADDING BY DPC, BUILDING WRAP PVC OR PAINTING.
2. CASTELLATED BATTEN, DRAINAGE PLASTIC BATTEN OR APPROVED DRAINED BATTEN CAN BE USED WITH THIS SYSTEM.
3. FASTENERS TO BE COMPATIBLE WITH MATERIAL BEING FIXED AND THE SUITABLE GRADE FOR THE ENVIRONMENT IN WHICH LOCATED.
4. REFER TO UNDERLAY MANUFACTURERS REQUIREMENTS FOR INSTALLATION RECOMMENDATIONS.

GENERAL NOTES:

- These details to be read with Roofing Industries RI925 Product Technical Statement and Installation Guide.
- The building designer is ultimately responsible to ensure that the details used meet the requirements of the NZ Building Code for the specific project.
- Details of the supporting structure (including cavity battens if used) are indicative only and are the responsibility of the building designer. For steel framed buildings thermal break cavity battens may be required.
- Roof/wall underlay selection are the responsibility of the designer. Underlay to be installed in accordance with underlay manufacturer's recommendations and requirements.
- These details are for Roofing Industries profile/s as nominated and may not be applicable to other profiles.
- This drawing is the copyright of 'Roofing Industries' and can only be copied or reproduced with their permission.
- Further information can be obtained from the NZ Metal Roof & Wall Cladding Code of Practice: www.metalroofing.org.nz or E2/AS1 where applicable.
- Details are for steel-based materials, other substrates may require some changes.
- All dimensions are nominal.
- Fixing: The designer needs to check the screw manufacturers technical data of the selected screw type for the design wind load and the material being fastened to.

Copyright detail © 2026

Roofing Industries
roof.co.nz

RI925 VERTICAL WALL CLADDING ON TIMBER FRAMING
STANDARD INTERNAL CORNER ON CAVITY

Detail Number: RI-R925VWC-040A
Date drawn: 14/10/2026
Scale: 1 : 5@ A4

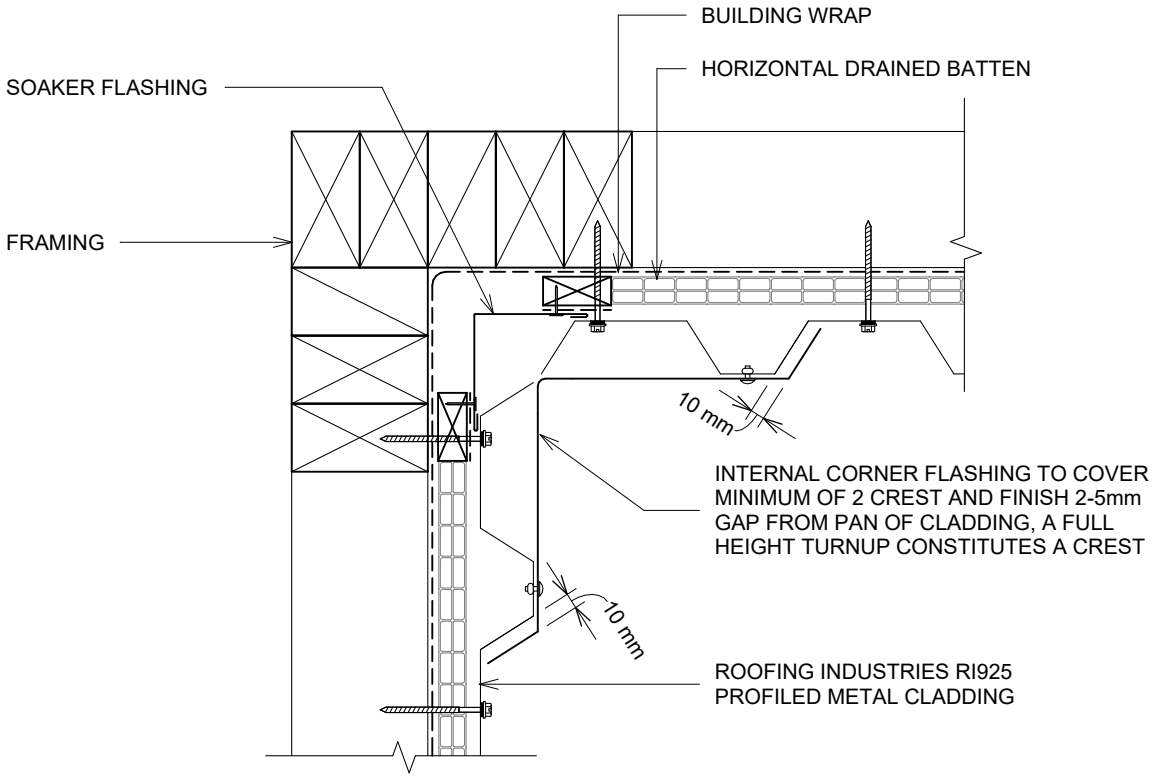

DETAIL ANNOTATION:

1. TIMBER OR PACKERS CONTAINING CORROSIVE MATERIAL MUST BE SEPARATED FROM METAL CLADDING BY DPC, BUILDING WRAP PVC OR PAINTING.
2. CASTELLATED BATTEN, DRAINAGE PLASTIC BATTEN OR APPROVED DRAINED BATTEN CAN BE USED WITH THIS SYSTEM.
3. FASTENERS TO BE COMPATIBLE WITH MATERIAL BEING FIXED AND THE SUITABLE GRADE FOR THE ENVIRONMENT IN WHICH LOCATED.
4. REFER TO UNDERLAY MANUFACTURERS REQUIREMENTS FOR INSTALLATION RECOMMENDATIONS.
5. A FULL HEIGHT TURNUP CONSTITUTES A CREST.

GENERAL NOTES:

- These details to be read with Roofing Industries RI925 Product Technical Statement and Installation Guide.
- The building designer is ultimately responsible to ensure that the details used meet the requirements of the NZ Building Code for the specific project.
- Details of the supporting structure (including cavity battens if used) are indicative only and are the responsibility of the building designer. For steel framed buildings thermal break cavity battens may be required.
- Roof/wall underlay selection are the responsibility of the designer. Underlay to be installed in accordance with underlay manufacturer's recommendations and requirements.
- These details are for Roofing Industries profile/s as nominated and may not be applicable to other profiles.
- This drawing is the copyright of 'Roofing Industries' and can only be copied or reproduced with their permission.
- Further information can be obtained from the NZ Metal Roof & Wall Cladding Code of Practice: www.metalroofing.org.nz or E2/AS1 where applicable.
- Details are for steel-based materials, other substrates may require some changes.
- All dimensions are nominal.
- Fixing: The designer needs to check the screw manufacturers technical data of the selected screw type for the design wind load and the material being fastened to.

Copyright detail © 2026

Roofing Industries
roof.co.nz

RI925 VERTICAL WALL CLADDING ON TIMBER FRAMING
INTERNAL CORNER WITH CLADDING CHANGE

Detail Number: RI-R925VWC-040B
Date drawn: 14/10/2026
Scale: 1 : 5@ A4

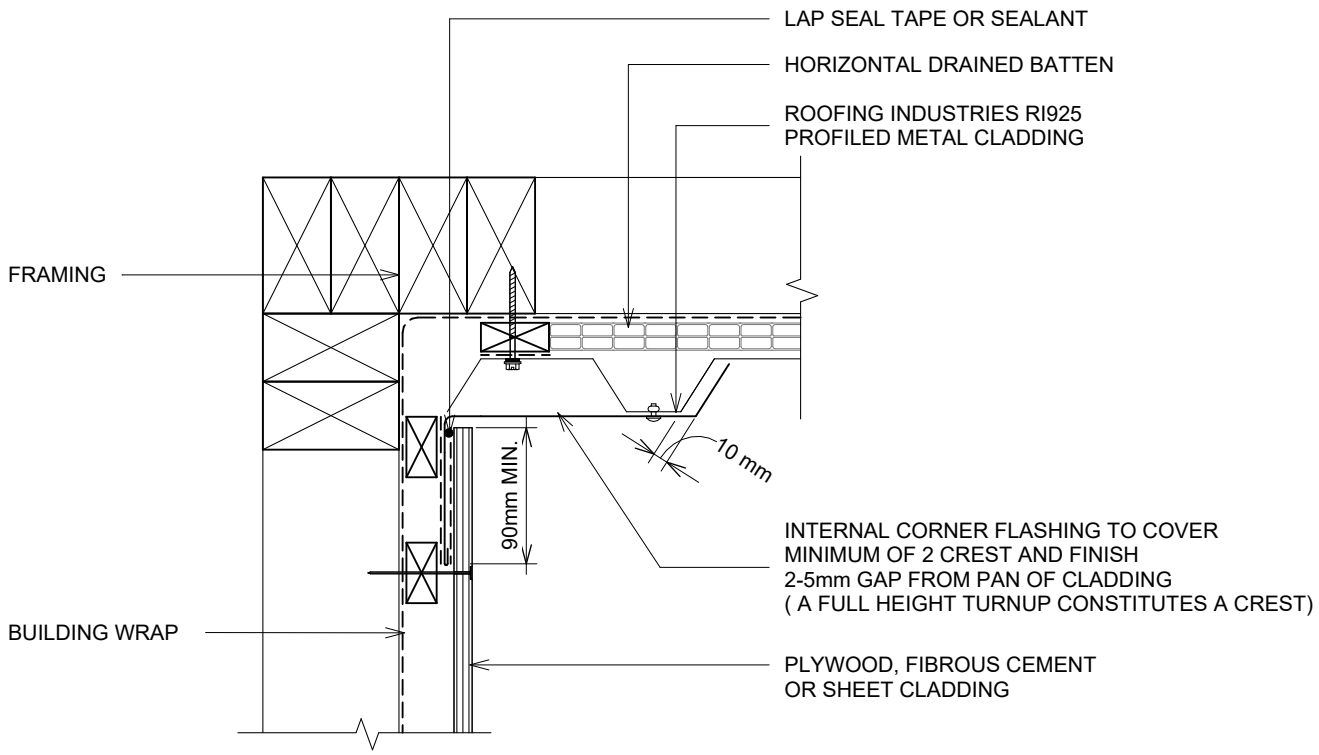

DETAIL ANNOTATION:

1. TIMBER OR PACKERS CONTAINING CORROSIVE MATERIAL MUST BE SEPARATED FROM METAL CLADDING BY DPC, BUILDING WRAP PVC OR PAINTING.
2. CASTELLATED BATTEN, DRAINAGE PLASTIC BATTEN OR APPROVED DRAINED BATTEN CAN BE USED WITH THIS SYSTEM.
3. FASTENERS TO BE COMPATIBLE WITH MATERIAL BEING FIXED AND THE SUITABLE GRADE FOR THE ENVIRONMENT IN WHICH LOCATED.
4. REFER TO UNDERLAY MANUFACTURERS REQUIREMENTS FOR INSTALLATION RECOMMENDATIONS.
5. A FULL HEIGHT TURNUP CONSTITUTES A CREST.

GENERAL NOTES:

- These details to be read with Roofing Industries RI925 Product Technical Statement and Installation Guide.
- The building designer is ultimately responsible to ensure that the details used meet the requirements of the NZ Building Code for the specific project.
- Details of the supporting structure (including cavity battens if used) are indicative only and are the responsibility of the building designer. For steel framed buildings thermal break cavity battens may be required.
- Roof/wall underlay selection are the responsibility of the designer. Underlay to be installed in accordance with underlay manufacturer's recommendations and requirements.
- These details are for Roofing Industries profile/s as nominated and may not be applicable to other profiles.
- This drawing is the copyright of 'Roofing Industries' and can only be copied or reproduced with their permission.
- Further information can be obtained from the NZ Metal Roof & Wall Cladding Code of Practice: www.metalroofing.org.nz or E2/AS1 where applicable.
- Details are for steel-based materials, other substrates may require some changes.
- All dimensions are nominal.
- Fixing: The designer needs to check the screw manufacturers technical data of the selected screw type for the design wind load and the material being fastened to.

Copyright detail © 2026

Roofing Industries
roof.co.nz

RI925 VERTICAL WALL CLADDING ON TIMBER FRAMING
BOTTOM OF CLADDING ON CAVITY

Detail Number: RI-R925VWC-050
Date drawn: 14/10/2026
Scale: 1 : 5@ A4

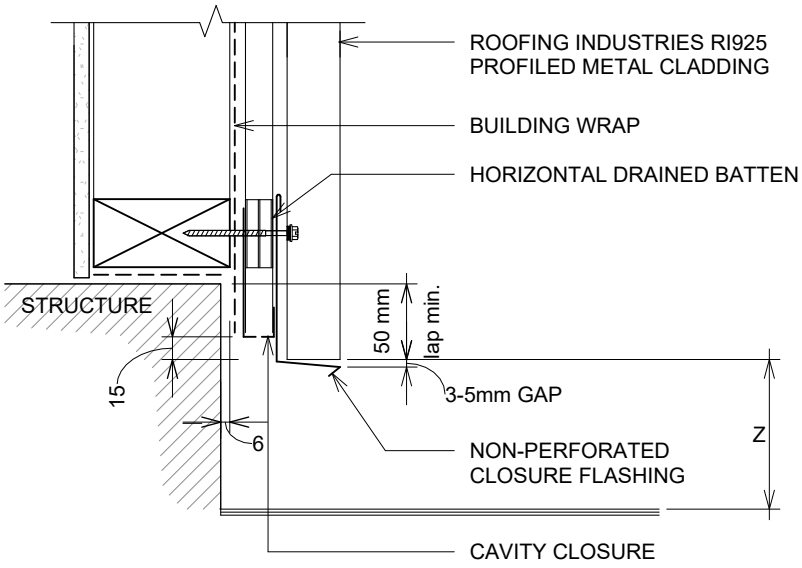

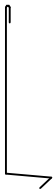

OPTION 01

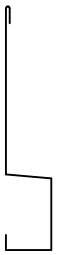

OPTION 02

SET DOWN	MINIMUM
	Z
PAVED SURFACE	100mm
UNPAVED SURFACE	175mm

DETAIL ANNOTATION:

1. THE BOTTOM EDGE OF THE CLADDING SHALL OVERLAP THE FOUNDATION WALL.
2. TIMBER OR PACKERS CONTAINING CORROSIVE MATERIAL MUST BE SEPARATED FROM METAL CLADDING BY DPC, BUILDING WRAP PVC OR PAINTING.
3. CASTELLATED BATTEN, DRAINAGE PLASTIC BATTEN OR APPROVED DRAINED BATTEN CAN BE USED WITH THIS SYSTEM.
4. FASTENERS TO BE COMPATIBLE WITH MATERIAL BEING FIXED AND THE SUITABLE GRADE FOR THE ENVIRONMENT IN WHICH LOCATED.
5. REFER TO UNDERLAY MANUFACTURERS REQUIREMENTS FOR INSTALLATION RECOMMENDATIONS.

GENERAL NOTES:

- These details to be read with Roofing Industries RI925 Product Technical Statement and Installation Guide.
- The building designer is ultimately responsible to ensure that the details used meet the requirements of the NZ Building Code for the specific project.
- Details of the supporting structure (including cavity battens if used) are indicative only and are the responsibility of the building designer. For steel framed buildings thermal break cavity battens may be required.
- Roof/wall underlay selection are the responsibility of the designer. Underlay to be installed in accordance with underlay manufacturer's recommendations and requirements.
- These details are for Roofing Industries profile/s as nominated and may not be applicable to other profiles.
- This drawing is the copyright of 'Roofing Industries' and can only be copied or reproduced with their permission.
- Further information can be obtained from the NZ Metal Roof & Wall Cladding Code of Practice: www.metalroofing.org.nz or E2/AS1 where applicable.
- Details are for steel-based materials, other substrates may require some changes.
- All dimensions are nominal.
- Fixing: The designer needs to check the screw manufacturers technical data of the selected screw type for the design wind load and the material being fastened to.

Copyright detail © 2026

Roofing Industries
roof.co.nz

RI925 VERTICAL WALL CLADDING ON TIMBER FRAMING
SOFFIT FLASHING ON CAVITY

Detail Number: RI-R925VWC-060
Date drawn: 14/10/2026
Scale: 1 : 5@ A4

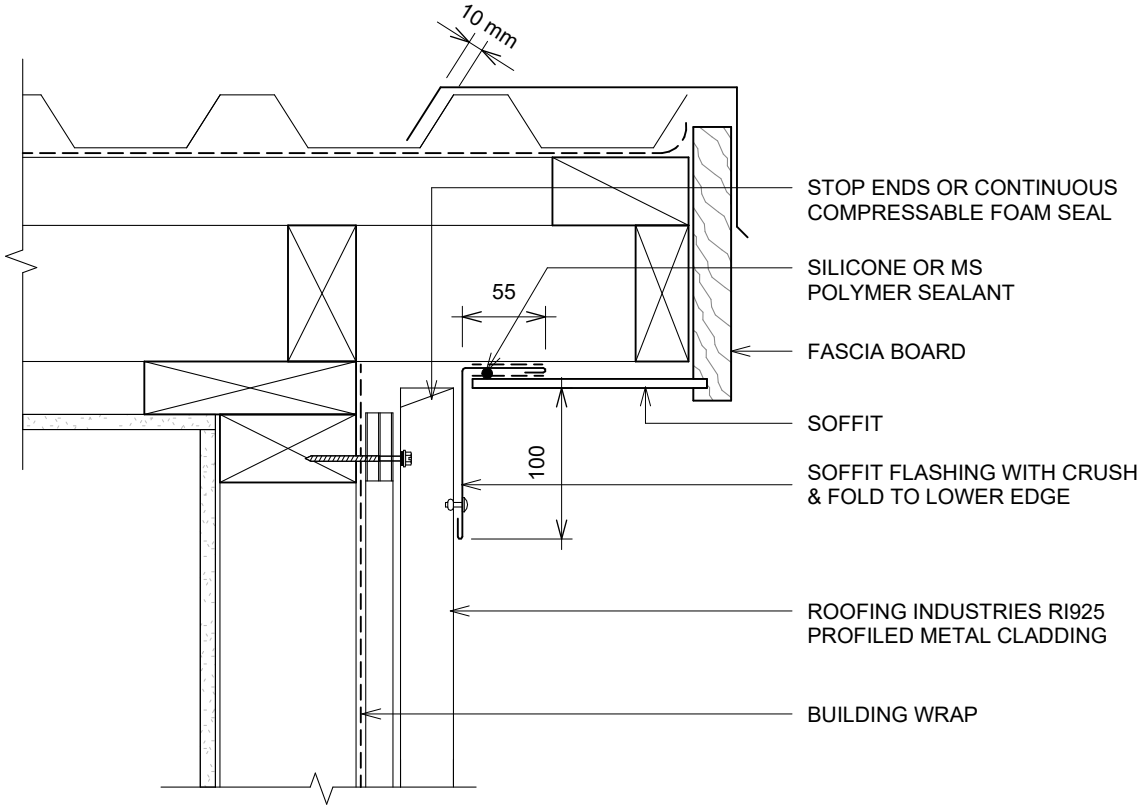

DETAIL ANNOTATION:

1. TIMBER OR PACKERS CONTAINING CORROSIVE MATERIAL MUST BE SEPARATED FROM METAL CLADDING BY DPC, BUILDING WRAP PVC OR PAINTING.
2. CASTELLATED BATTEN, DRAINAGE PLASTIC BATTEN OR APPROVED DRAINED BATTEN CAN BE USED WITH THIS SYSTEM.
3. FASTENERS TO BE COMPATIBLE WITH MATERIAL BEING FIXED AND THE SUITABLE GRADE FOR THE ENVIRONMENT IN WHICH LOCATED.
4. REFER TO UNDERLAY MANUFACTURERS REQUIREMENTS FOR INSTALLATION RECOMMENDATIONS.

FLASHING OPTION 1

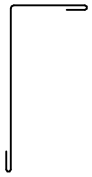

FLASHING OPTION 2

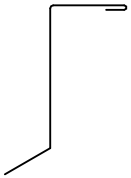

NOTCH CLEAR OF PAN 2-5mm

GENERAL NOTES:

- These details to be read with Roofing Industries RI925 Product Technical Statement and Installation Guide.
- The building designer is ultimately responsible to ensure that the details used meet the requirements of the NZ Building Code for the specific project.
- Details of the supporting structure (including cavity battens if used) are indicative only and are the responsibility of the building designer. For steel framed buildings thermal break cavity battens may be required.
- Roof/wall underlay selection are the responsibility of the designer. Underlay to be installed in accordance with underlay manufacturer's recommendations and requirements.
- These details are for Roofing Industries profile/s as nominated and may not be applicable to other profiles.
- This drawing is the copyright of 'Roofing Industries' and can only be copied or reproduced with their permission.
- Further information can be obtained from the NZ Metal Roof & Wall Cladding Code of Practice: www.metalroofing.org.nz or E2/AS1 where applicable.
- Details are for steel-based materials, other substrates may require some changes.
- All dimensions are nominal.
- Fixing: The designer needs to check the screw manufacturers technical data of the selected screw type for the design wind load and the material being fastened to.

Copyright detail © 2026

Roofing Industries
roof.co.nz

RI925 VERTICAL WALL CLADDING ON TIMBER FRAMING
SLOPING SOFFIT FLASHING ON CAVITY

Detail Number: RI-R925VWC-070
Date drawn: 14/10/2026
Scale: 1 : 5@ A4

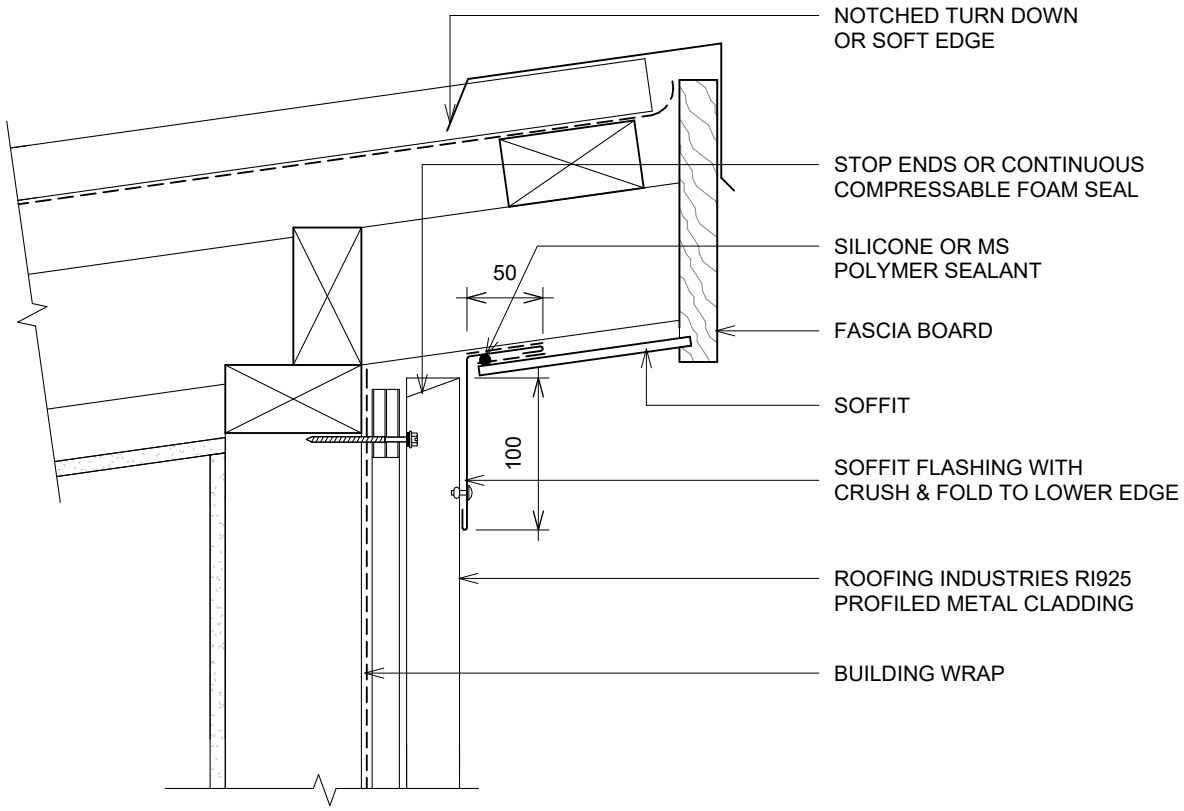

DETAIL ANNOTATION:

1. TIMBER OR PACKERS CONTAINING CORROSIVE MATERIAL MUST BE SEPARATED FROM METAL CLADDING BY DPC, BUILDING WRAP PVC OR PAINTING.
2. CASTELLATED BATTEN, DRAINAGE PLASTIC BATTEN OR APPROVED DRAINED BATTEN CAN BE USED WITH THIS SYSTEM.
3. FASTENERS TO BE COMPATIBLE WITH MATERIAL BEING FIXED AND THE SUITABLE GRADE FOR THE ENVIRONMENT IN WHICH LOCATED.
4. REFER TO UNDERLAY MANUFACTURERS REQUIREMENTS FOR INSTALLATION RECOMMENDATIONS.

FLASHING OPTION 1

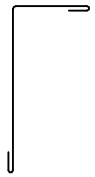

FLASHING OPTION 2

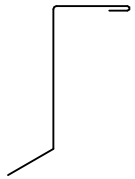

NOTCH CLEAR OF
PAN 2-5mm

GENERAL NOTES:

- These details to be read with Roofing Industries RI925 Product Technical Statement and Installation Guide.
- The building designer is ultimately responsible to ensure that the details used meet the requirements of the NZ Building Code for the specific project.
- Details of the supporting structure (including cavity battens if used) are indicative only and are the responsibility of the building designer. For steel framed buildings thermal break cavity battens may be required.
- Roof/wall underlay selection are the responsibility of the designer. Underlay to be installed in accordance with underlay manufacturer's recommendations and requirements.
- These details are for Roofing Industries profile/s as nominated and may not be applicable to other profiles.
- This drawing is the copyright of 'Roofing Industries' and can only be copied or reproduced with their permission.
- Further information can be obtained from the NZ Metal Roof & Wall Cladding Code of Practice: www.metalroofing.org.nz or E2/AS1 where applicable.
- Details are for steel-based materials, other substrates may require some changes.
- All dimensions are nominal.
- Fixing: The designer needs to check the screw manufacturers technical data of the selected screw type for the design wind load and the material being fastened to.

Copyright detail © 2026

Roofing Industries
roof.co.nz

RI925 VERTICAL WALL CLADDING ON TIMBER FRAMING
VERTICAL BUTT JOINT ON CAVITY WITH CLADDING CHANGE (CAVITY)

Detail Number: RI-R925VWC-090
Date drawn: 14/10/2026
Scale: 1 : 5@ A4

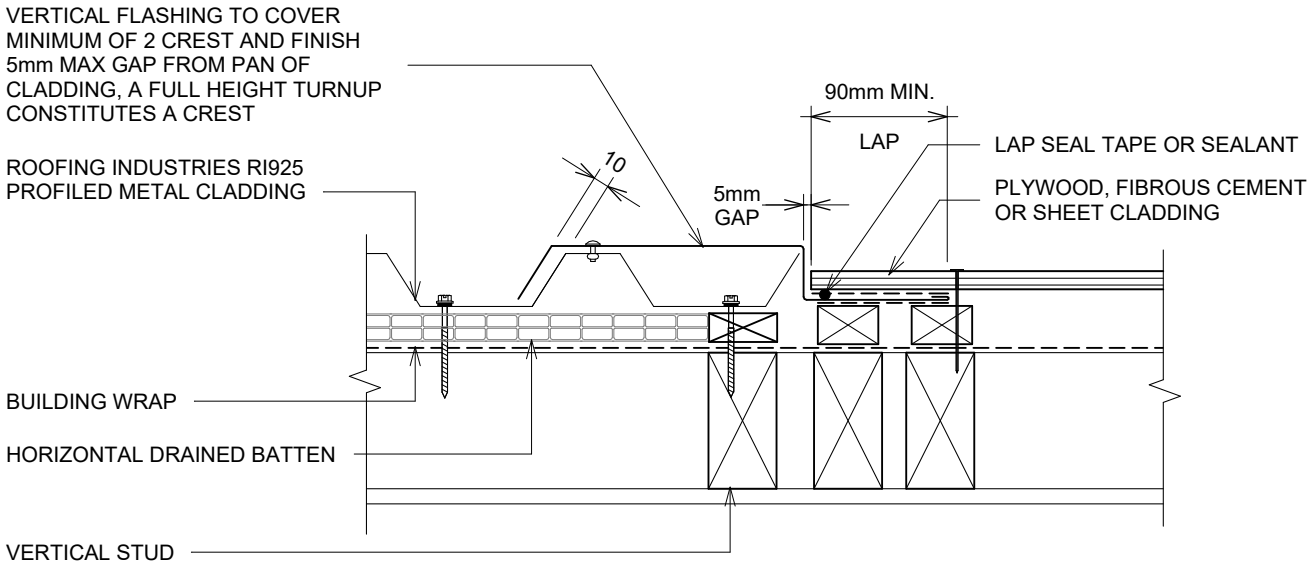

DETAIL ANNOTATION:

1. TIMBER OR PACKERS CONTAINING CORROSIVE MATERIAL MUST BE SEPARATED FROM METAL CLADDING BY DPC, BUILDING WRAP PVC OR PAINTING.
2. CASTELLATED BATTEN, DRAINAGE PLASTIC BATTEN OR APPROVED DRAINED BATTEN CAN BE USED WITH THIS SYSTEM.
3. FASTENERS TO BE COMPATIBLE WITH MATERIAL BEING FIXED AND THE SUITABLE GRADE FOR THE ENVIRONMENT IN WHICH LOCATED.
4. REFER TO UNDERLAY MANUFACTURERS REQUIREMENTS FOR INSTALLATION RECOMMENDATIONS.

GENERAL NOTES:

- These details to be read with Roofing Industries RI925 Product Technical Statement and Installation Guide.
- The building designer is ultimately responsible to ensure that the details used meet the requirements of the NZ Building Code for the specific project.
- Details of the supporting structure (including cavity battens if used) are indicative only and are the responsibility of the building designer. For steel framed buildings thermal break cavity battens may be required.
- Roof/wall underlay selection are the responsibility of the designer. Underlay to be installed in accordance with underlay manufacturer's recommendations and requirements.
- These details are for Roofing Industries profile/s as nominated and may not be applicable to other profiles.
- This drawing is the copyright of 'Roofing Industries' and can only be copied or reproduced with their permission.
- Further information can be obtained from the NZ Metal Roof & Wall Cladding Code of Practice: www.metalroofing.org.nz or E2/AS1 where applicable.
- Details are for steel-based materials, other substrates may require some changes.
- All dimensions are nominal.
- Fixing: The designer needs to check the screw manufacturers technical data of the selected screw type for the design wind load and the material being fastened to.

Copyright detail © 2026

Roofing Industries
roof.co.nz

RI925 VERTICAL WALL CLADDING ON TIMBER FRAMING
JUNCTION FLASHING ON CAVITY

Detail Number: RI-R925VWC-100
Date drawn: 14/10/2026
Scale: 1 : 5@ A4

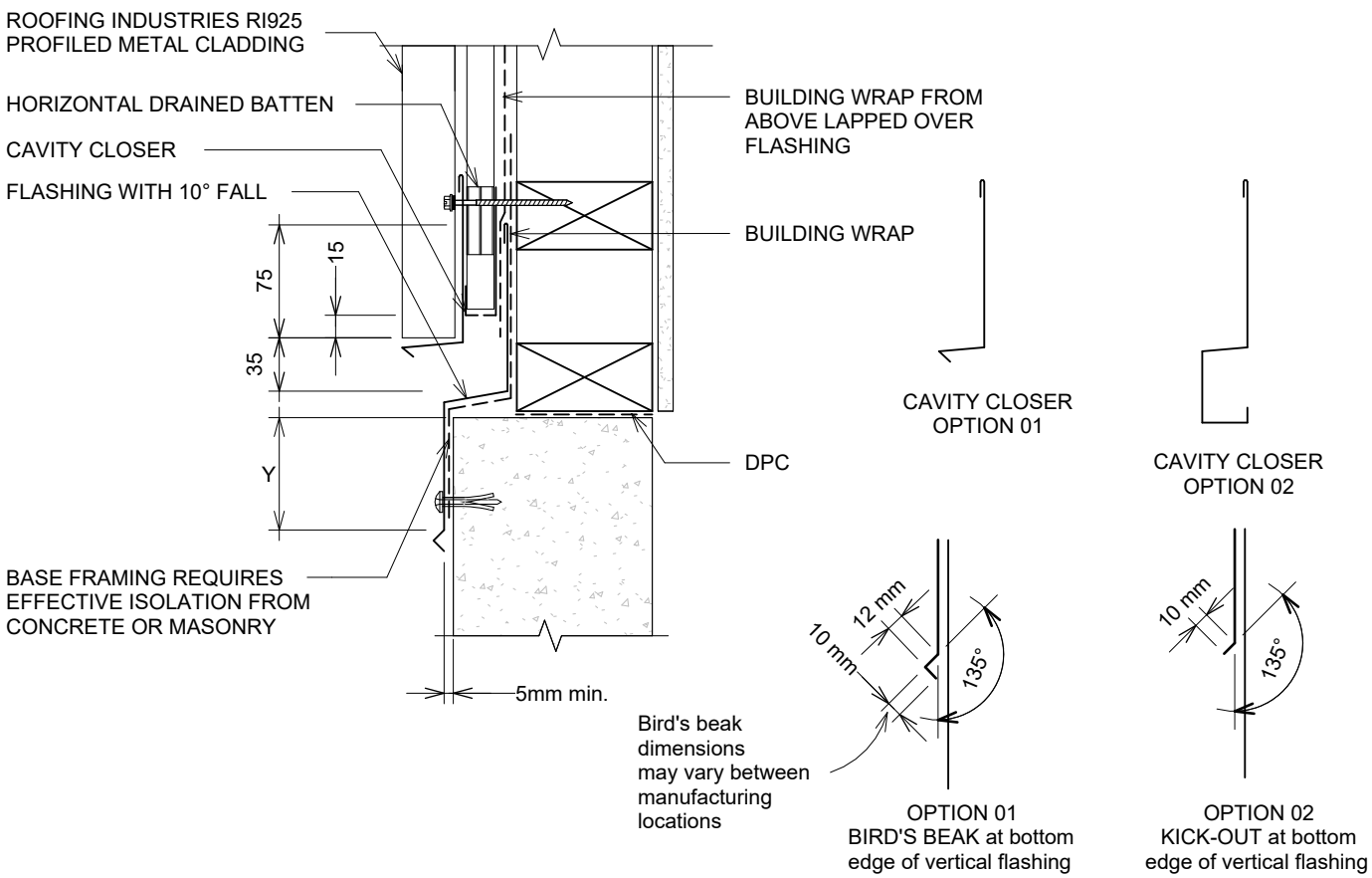

CAVITY CLOSER
OPTION 01

CAVITY CLOSER
OPTION 02

Bird's beak
dimensions
may vary between
manufacturing
locations

OPTION 01
BIRD'S BEAK at bottom
edge of vertical flashing

OPTION 02
KICK-OUT at bottom
edge of vertical flashing

DETAIL ANNOTATION:

1. SITUATION 1, 2 & 3 AS PER E2/AS1 TABLE 4.5.1.1
2. EXCLUDING DRIP EDGE.
3. TIMBER OR PACKERS CONTAINING CORROSIVE MATERIAL MUST BE SEPARATED FROM METAL CLADDING BY DPC, BUILDING WRAP PVC OR PAINTING.
4. CASTELLATED BATTEN, DRAINAGE PLASTIC BATTEN OR APPROVED DRAINED BATTEN CAN BE USED WITH THIS SYSTEM.
5. FASTENERS TO BE COMPATIBLE WITH MATERIAL BEING FIXED AND THE SUITABLE GRADE FOR THE ENVIRONMENT IN WHICH LOCATED.
6. REFER TO UNDERLAY MANUFACTURERS REQUIREMENTS FOR INSTALLATION RECOMMENDATIONS.

GENERAL NOTES:

- These details to be read with Roofing Industries RI925 Product Technical Statement and Installation Guide.
- The building designer is ultimately responsible to ensure that the details used meet the requirements of the NZ Building Code for the specific project.
- Details of the supporting structure (including cavity battens if used) are indicative only and are the responsibility of the building designer. For steel framed buildings thermal break cavity battens may be required.
- Roof/wall underlay selection are the responsibility of the designer. Underlay to be installed in accordance with underlay manufacturer's recommendations and requirements.
- These details are for Roofing Industries profile/s as nominated and may not be applicable to other profiles.
- This drawing is the copyright of 'Roofing Industries' and can only be copied or reproduced with their permission.
- Further information can be obtained from the NZ Metal Roof & Wall Cladding Code of Practice: www.metalroofing.org.nz or E2/AS1 where applicable.
- Details are for steel-based materials, other substrates may require some changes.
- All dimensions are nominal.
- Fixing: The designer needs to check the screw manufacturers technical data of the selected screw type for the design wind load and the material being fastened to.

Copyright detail © 2026

Roofing Industries
roof.co.nz

RI925 VERTICAL WALL CLADDING ON TIMBER FRAMING BALUSTRADE ON CAVITY

Detail Number: RI-R925VWC-110
Date drawn: 14/10/2026
Scale: 1 : 5@ A4

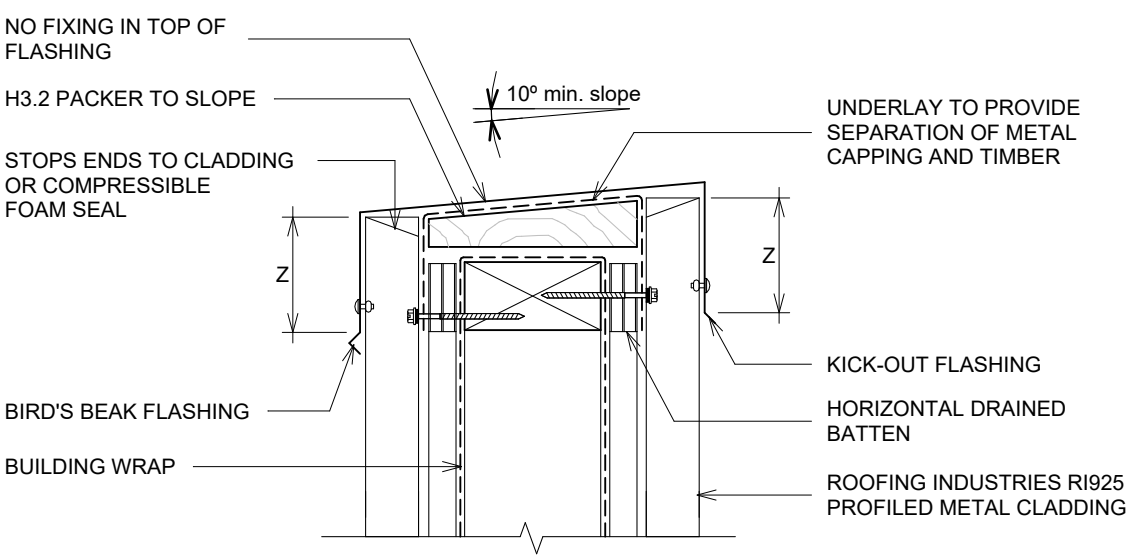

OPTION 01

Bird's beak dimensions may vary between manufacturing locations

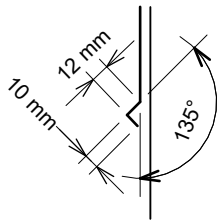

BIRD'S BEAK at bottom edge of vertical flashing

OPTION 02

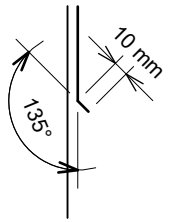

KICK-OUT at bottom edge of vertical flashing

SITE WIND ZONE (As per NZS3604)	MINIMUM (mm) Z (2)
SITUATION 1	50mm
SITUATION 2	70mm
SITUATION 3	90mm

DETAIL ANNOTATION:

1. SITUATION 1, 2 & 3 AS PER E2/AS1 TABLE 4.5.1.1
2. EXCLUDING DRIP EDGE.
3. TIMBER OR PACKERS CONTAINING CORROSIVE MATERIAL MUST BE SEPARATED FROM METAL CLADDING BY DPC, BUILDING WRAP PVC OR PAINTING.
4. CASTELLATED BATTEN, DRAINAGE PLASTIC BATTEN OR APPROVED DRAINED BATTEN CAN BE USED WITH THIS SYSTEM.
5. FASTENERS TO BE COMPATIBLE WITH MATERIAL BEING FIXED AND THE SUITABLE GRADE FOR THE ENVIRONMENT IN WHICH LOCATED.
6. REFER TO UNDERLAY MANUFACTURERS REQUIREMENTS FOR INSTALLATION RECOMMENDATIONS.

GENERAL NOTES:

- These details to be read with Roofing Industries RI925 Product Technical Statement and Installation Guide.
- The building designer is ultimately responsible to ensure that the details used meet the requirements of the NZ Building Code for the specific project.
- Details of the supporting structure (including cavity battens if used) are indicative only and are the responsibility of the building designer. For steel framed buildings thermal break cavity battens may be required.
- Roof/wall underlay selection are the responsibility of the designer. Underlay to be installed in accordance with underlay manufacturer's recommendations and requirements.
- These details are for Roofing Industries profile/s as nominated and may not be applicable to other profiles.
- This drawing is the copyright of 'Roofing Industries' and can only be copied or reproduced with their permission.
- Further information can be obtained from the NZ Metal Roof & Wall Cladding Code of Practice: www.metalroofing.org.nz or E2/AS1 where applicable.
- Details are for steel-based materials, other substrates may require some changes.
- All dimensions are nominal.
- Fixing: The designer needs to check the screw manufacturers technical data of the selected screw type for the design wind load and the material being fastened to.

Copyright detail © 2026

Roofing Industries
roof.co.nz

RI925 VERTICAL WALL CLADDING ON TIMBER FRAMING
HEAD FLASHING ON CAVITY (RECESSED WINDOW/DOOR) OPTION 1

Detail Number: RI-R925VWC-120A
Date drawn: 14/10/2026
Scale: 1 : 5@ A4

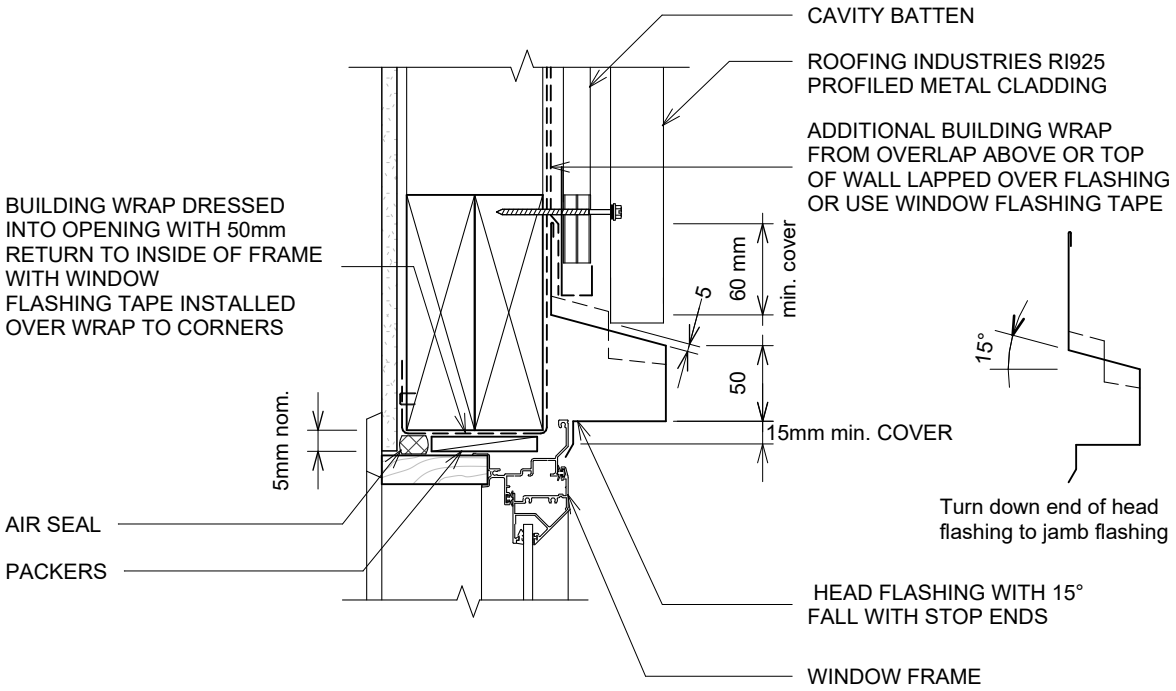

DETAIL ANNOTATION:

1. REFER TO E2/AS1 FOR GENERAL WINDOW OPENING FOR WRAPPING OF FRAMED OPENING PRIOR TO WINDOW INSTALLATION.
2. ARCHITRAVE'S ARE SHOWN FOR CONSISTENCY ONLY, DETAIL MAY BE USED WITH REBATED LINER.
3. LIAISE WITH WINDOW MANUFACTURER PRIOR TO INSTALLATION
4. SEAL HEAD FLASHING TO WINDOW IN VERY HIGH & EXTRA HIGH WIND ZONES.
5. TIMBER OR PACKERS CONTAINING CORROSIVE MATERIAL MUST BE SEPARATED FROM METAL CLADDING BY DPC, BUILDING WRAP PVC OR PAINTING.
6. CASTELLATED BATTEN, DRAINAGE PLASTIC BATTEN OR APPROVED DRAINED BATTEN CAN BE USED WITH THIS SYSTEM.
7. FASTENERS TO BE COMPATIBLE WITH MATERIAL BEING FIXED AND THE SUITABLE GRADE FOR THE ENVIRONMENT IN WHICH LOCATED.
8. ALTERNATIVELY REFER TO E2/AS1.
9. REFER TO UNDERLAY MANUFACTURERS REQUIREMENTS FOR INSTALLATION RECOMMENDATIONS.
10. JOINERY AND JOINERY FLASHING INTERFACE IS INDICATIVE ONLY. REFER TO SELECTED JOINERY MANUFACTURER'S RECOMMENDATIONS AND DETAILS.

GENERAL NOTES:

- These details to be read with Roofing Industries RI925 Product Technical Statement and Installation Guide.
- The building designer is ultimately responsible to ensure that the details used meet the requirements of the NZ Building Code for the specific project.
- Details of the supporting structure (including cavity battens if used) are indicative only and are the responsibility of the building designer. For steel framed buildings thermal break cavity battens may be required.
- Roof/wall underlay selection are the responsibility of the designer. Underlay to be installed in accordance with underlay manufacturer's recommendations and requirements.
- These details are for Roofing Industries profile/s as nominated and may not be applicable to other profiles.
- This drawing is the copyright of 'Roofing Industries' and can only be copied or reproduced with their permission.
- Further information can be obtained from the NZ Metal Roof & Wall Cladding Code of Practice: www.metalroofing.org.nz or E2/AS1 where applicable.
- Details are for steel-based materials, other substrates may require some changes.
- All dimensions are nominal.
- Fixing: The designer needs to check the screw manufacturers technical data of the selected screw type for the design wind load and the material being fastened to.

Copyright detail © 2026

Roofing Industries
roof.co.nz

RI925 VERTICAL WALL CLADDING ON TIMBER FRAMING
JAMB FLASHING ON CAVITY (RECESSED WINDOW/DOOR) OPTION 1

Detail Number: RI-R925VWC-120B
Date drawn: 14/10/2026
Scale: 1 : 5@ A4

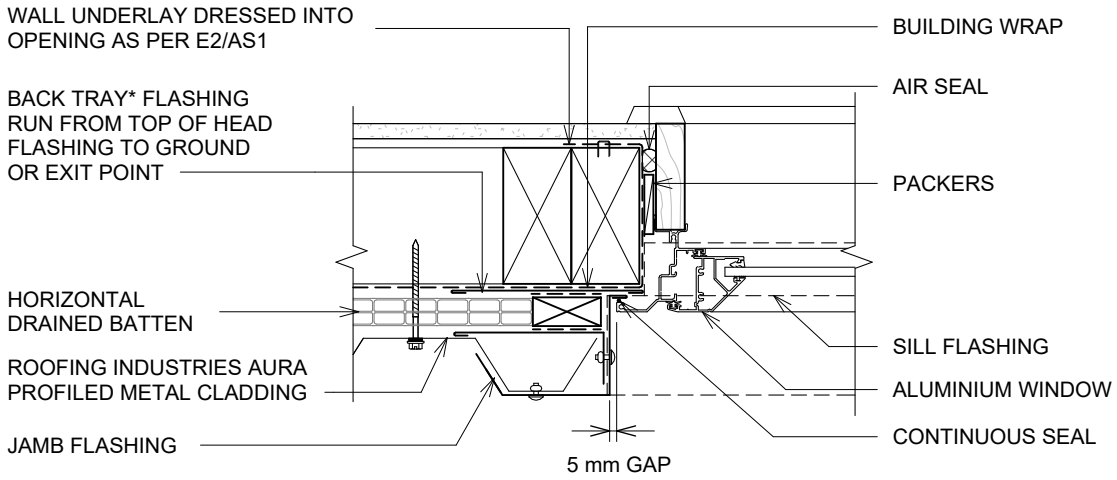

DETAIL ANNOTATION:

1. REFER TO E2/AS1 FOR GENERAL WINDOW OPENING FOR WRAPPING OF FRAMED OPENING PRIOR TO WINDOW INSTALLATION.
2. ARCHITRAVE'S ARE SHOWN FOR CONSISTENCY ONLY, DETAIL MAY BE USED WITH REBATED LINER.
3. LIAISE WITH WINDOW MANUFACTURER PRIOR TO INSTALLATION.
4. TIMBER OR PACKERS CONTAINING CORROSIVE MATERIAL MUST BE SEPARATED FROM METAL CLADDING BY DPC, BUILDING WRAP PVC OR PAINTING.
5. CASTELLATED BATTEN OR APPROVED DRAINED BATTEN CAN BE USED WITH THIS SYSTEM.
6. FASTENERS TO BE COMPATIBLE WITH MATERIAL BEING FIXED AND THE SUITABLE GRADE FOR THE ENVIRONMENT IN WHICH LOCATED.
7. ALTERNATIVELY REFER TO E2/AS1.
8. REFER TO UNDERLAY MANUFACTURERS REQUIREMENTS FOR INSTALLATION RECOMMENDATIONS.
9. JOINERY AND JOINERY FLASHING INTERFACE IS INDICATIVE ONLY. REFER TO SELECTED JOINERY MANUFACTURER'S RECOMMENDATIONS AND DETAILS.

JAMB FLASHING ON CAVITY

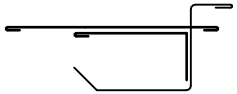

ALTERNATIVE JAMB FLASHING OPTION

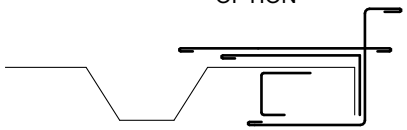

GENERAL NOTES:

- These details to be read with Roofing Industries RI925 Product Technical Statement and Installation Guide.
- The building designer is ultimately responsible to ensure that the details used meet the requirements of the NZ Building Code for the specific project.
- Details of the supporting structure (including cavity battens if used) are indicative only and are the responsibility of the building designer. For steel framed buildings thermal break cavity battens may be required.
- Roof/wall underlay selection are the responsibility of the designer. Underlay to be installed in accordance with underlay manufacturer's recommendations and requirements.
- These details are for Roofing Industries profile/s as nominated and may not be applicable to other profiles.
- This drawing is the copyright of 'Roofing Industries' and can only be copied or reproduced with their permission.
- Further information can be obtained from the NZ Metal Roof & Wall Cladding Code of Practice: www.metalroofing.org.nz or E2/AS1 where applicable.
- Details are for steel-based materials, other substrates may require some changes.
- All dimensions are nominal.
- Fixing: The designer needs to check the screw manufacturers technical data of the selected screw type for the design wind load and the material being fastened to.

Copyright detail © 2026

Roofing Industries
roof.co.nz

RI925 VERTICAL WALL CLADDING ON TIMBER FRAMING
SILL FLASHING ON CAVITY (RECESSED WINDOW/DOOR) OPTION 1

Detail Number: RI-R925VWC-120C
Date drawn: 14/10/2026
Scale: 1 : 5@ A4

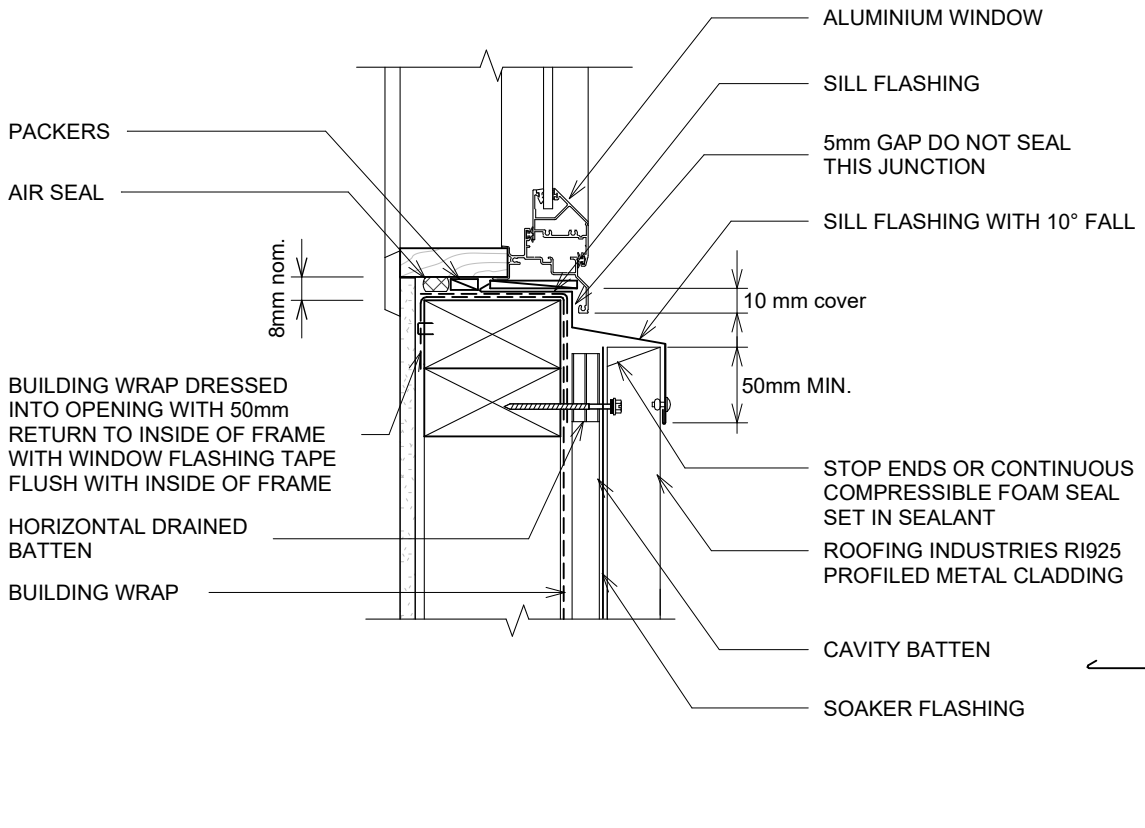

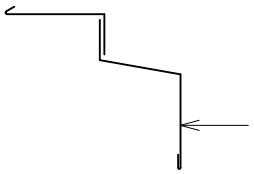

DETAIL ANNOTATION:

1. REFER TO E2/AS1 FOR GENERAL WINDOW OPENING FOR WRAPPING OF FRAMED OPENING PRIOR TO WINDOW INSTALLATION
2. ARCHITRAVE'S ARE SHOWN FOR CONSISTENCY ONLY, DETAIL MAY BE USED WITH REBATED LINER
3. LIAISE WITH WINDOW MANUFACTURER PRIOR TO INSTALLATION
4. SEAL HEAD FLASHING TO WINDOW IN VERY HIGH & EXTRA HIGH WIND ZONES
5. TIMBER OR PACKERS CONTAINING CORROSIVE MATERIAL MUST BE SEPARATED FROM METAL CLADDING BY DPC, BUILDING WRAP PVC OR PAINTING.
6. CASTELLATED BATTEN, DRAINAGE PLASTIC BATTEN OR APPROVED DRAINED BATTEN CAN BE USED WITH THIS SYSTEM.
7. FASTENERS TO BE COMPATIBLE WITH MATERIAL BEING FIXED AND THE SUITABLE GRADE FOR THE ENVIRONMENT IN WHICH LOCATED
8. ALTERNATIVELY REFER TO E2/AS1
9. REFER TO UNDERLAY MANUFACTURERS REQUIREMENTS FOR INSTALLATION RECOMMENDATIONS
10. JOINERY AND JOINERY FLASHING INTERFACE IS INDICATIVE ONLY. REFER TO SELECTED JOINERY MANUFACTURER'S RECOMMENDATIONS AND DETAILS.

* Back tray size may require to increase to ensure coverage at ends of head flashings. Back Tray to run from top of head flashing to ground or exit point. * (Dimensions are indicative only) * Turn down end of head flashing

GENERAL NOTES:

- These details to be read with Roofing Industries RI925 Product Technical Statement and Installation Guide.
- The building designer is ultimately responsible to ensure that the details used meet the requirements of the NZ Building Code for the specific project.
- Details of the supporting structure (including cavity battens if used) are indicative only and are the responsibility of the building designer. For steel framed buildings thermal break cavity battens may be required.
- Roof/wall underlay selection are the responsibility of the designer. Underlay to be installed in accordance with underlay manufacturer's recommendations and requirements.
- These details are for Roofing Industries profile/s as nominated and may not be applicable to other profiles.
- This drawing is the copyright of 'Roofing Industries' and can only be copied or reproduced with their permission.
- Further information can be obtained from the NZ Metal Roof & Wall Cladding Code of Practice: www.metalroofing.org.nz or E2/AS1 where applicable.
- Details are for steel-based materials, other substrates may require some changes.
- All dimensions are nominal.
- Fixing: The designer needs to check the screw manufacturers technical data of the selected screw type for the design wind load and the material being fastened to.

Copyright detail © 2026

Roofing Industries
roof.co.nz

RI925 VERTICAL WALL CLADDING ON TIMBER FRAMING ISOMETRIC FLASHING LAYOUT ON CAVITY (RECESSED WINDOW/DOOR) OPTION 1

Detail Number: RI-R925VWC-120D
Date drawn: 14/10/2026
Scale: 1 : 5@ A4

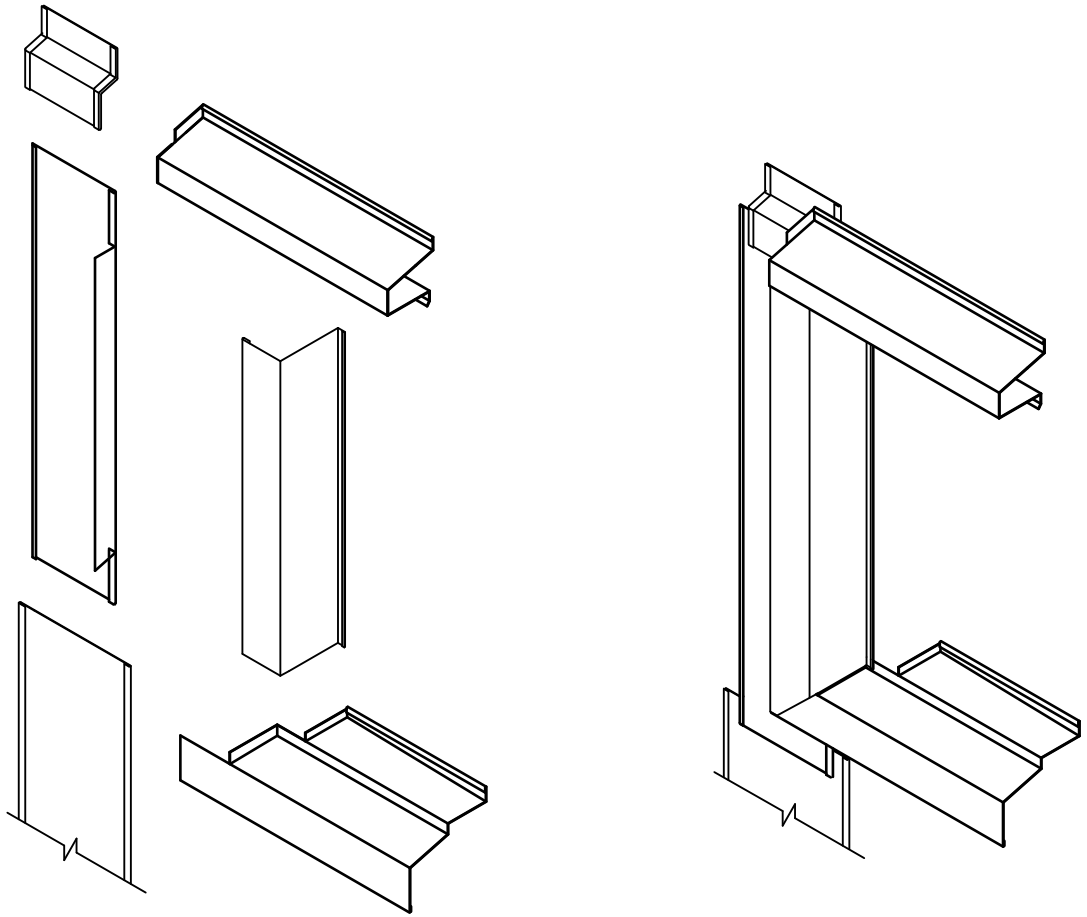

GENERAL NOTES:

- These details to be read with Roofing Industries RI925 Product Technical Statement and Installation Guide.
- The building designer is ultimately responsible to ensure that the details used meet the requirements of the NZ Building Code for the specific project.
- Details of the supporting structure (including cavity battens if used) are indicative only and are the responsibility of the building designer. For steel framed buildings thermal break cavity battens may be required.
- Roof/wall underlay selection are the responsibility of the designer. Underlay to be installed in accordance with underlay manufacturer's recommendations and requirements.
- These details are for Roofing Industries profile/s as nominated and may not be applicable to other profiles.
- This drawing is the copyright of 'Roofing Industries' and can only be copied or reproduced with their permission.
- Further information can be obtained from the NZ Metal Roof & Wall Cladding Code of Practice: www.metalroofing.org.nz or E2/AS1 where applicable.
- Details are for steel-based materials, other substrates may require some changes.
- All dimensions are nominal.
- Fixing: The designer needs to check the screw manufacturers technical data of the selected screw type for the design wind load and the material being fastened to.

Copyright detail © 2026

Roofing Industries
roof.co.nz

RI925 VERTICAL WALL CLADDING ON TIMBER FRAMING
HEAD FLASHING ON CAVITY (RECESSED WINDOW/DOOR) OPTION 2

Detail Number: RI-R925VWC-130A
Date drawn: 14/10/2026
Scale: 1 : 5@ A4

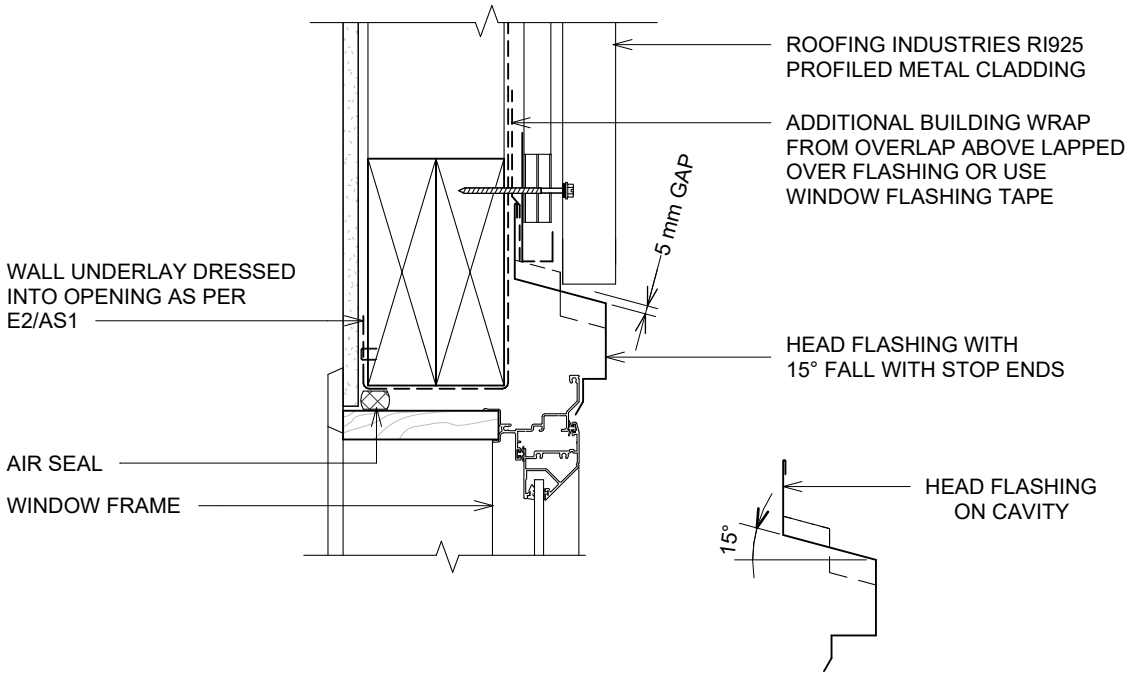

DETAIL ANNOTATION:

1. REFER TO E2/AS1 FOR GENERAL WINDOW OPENING FOR WRAPPING OF FRAMED OPENING PRIOR TO WINDOW INSTALLATION
2. ARCHITRAVE'S ARE SHOWN FOR CONSISTENCY ONLY, DETAIL MAY BE USED WITH REBATED LINER
3. LIAISE WITH WINDOW MANUFACTURER PRIOR TO INSTALLATION
4. SEAL HEAD FLASHING TO WINDOW IN VERY HIGH & EXTRA HIGH WIND ZONES
5. TIMBER OR PACKERS CONTAINING CORROSIVE MATERIAL MUST BE SEPARATED FROM METAL CLADDING BY DPC, BUILDING WRAP PVC OR PAINTING.
6. CASTELLATED BATTEN, DRAINAGE PLASTIC BATTEN OR APPROVED DRAINED BATTEN CAN BE USED WITH THIS SYSTEM.
7. FASTENERS TO BE COMPATIBLE WITH MATERIAL BEING FIXED AND THE SUITABLE GRADE FOR THE ENVIRONMENT IN WHICH LOCATED
8. ALTERNATIVELY REFER TO E2/AS1
9. REFER TO UNDERLAY MANUFACTURERS REQUIREMENTS FOR INSTALLATION RECOMMENDATIONS
10. JOINERY AND JOINERY FLASHING INTERFACE IS INDICATIVE ONLY. REFER TO SELECTED JOINERY MANUFACTURER'S RECOMMENDATIONS AND DETAILS.

GENERAL NOTES:

- These details to be read with Roofing Industries RI925 Product Technical Statement and Installation Guide.
- The building designer is ultimately responsible to ensure that the details used meet the requirements of the NZ Building Code for the specific project.
- Details of the supporting structure (including cavity battens if used) are indicative only and are the responsibility of the building designer. For steel framed buildings thermal break cavity battens may be required.
- Roof/wall underlay selection are the responsibility of the designer. Underlay to be installed in accordance with underlay manufacturer's recommendations and requirements.
- These details are for Roofing Industries profile/s as nominated and may not be applicable to other profiles.
- This drawing is the copyright of 'Roofing Industries' and can only be copied or reproduced with their permission.
- Further information can be obtained from the NZ Metal Roof & Wall Cladding Code of Practice: www.metalroofing.org.nz or E2/AS1 where applicable.
- Details are for steel-based materials, other substrates may require some changes.
- All dimensions are nominal.
- Fixing: The designer needs to check the screw manufacturers technical data of the selected screw type for the design wind load and the material being fastened to.

Copyright detail © 2026

Roofing Industries
roof.co.nz

RI925 VERTICAL WALL CLADDING ON TIMBER FRAMING
JAMB FLASHING ON CAVITY (RECESSED WINDOW/DOOR) OPTION 2

Detail Number: RI-R925VWC-130B
Date drawn: 14/10/2026
Scale: 1 : 5@ A4

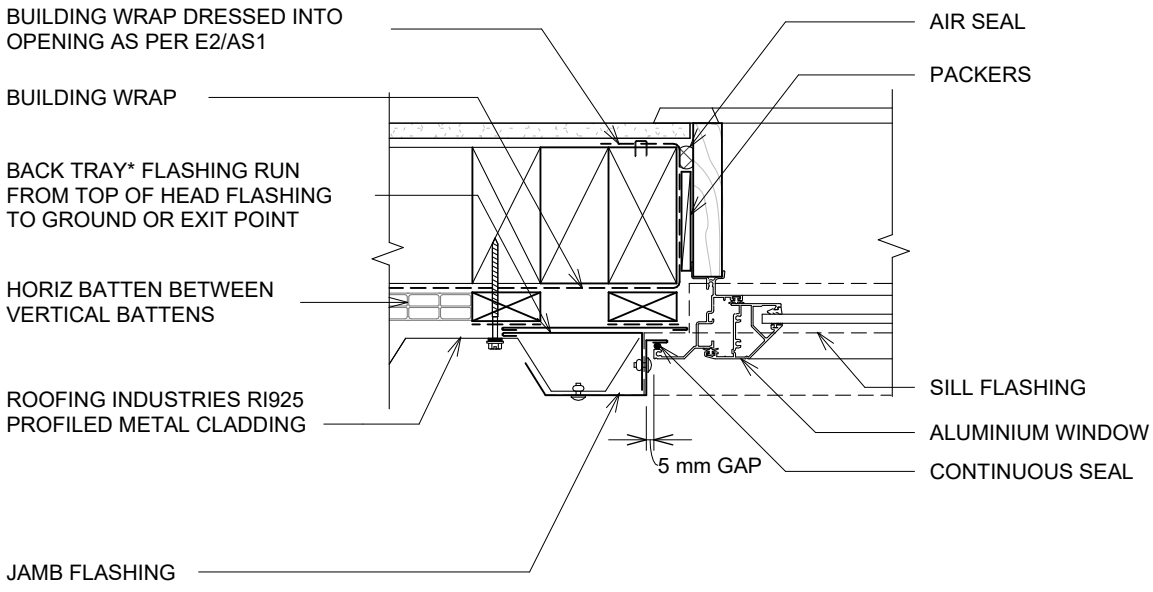

DETAIL ANNOTATION:

1. REFER TO E2/AS1 FOR GENERAL WINDOW OPENING FOR WRAPPING OF FRAMED OPENING PRIOR TO WINDOW INSTALLATION.
2. ARCHITRAVE'S ARE SHOWN FOR CONSISTENCY ONLY, DETAIL MAY BE USED WITH REBATED LINER.
3. LIAISE WITH WINDOW MANUFACTURER PRIOR TO INSTALLATION
4. REFER TO WINDOW MANUFACTURER REGARDING SUPPORT BARS REQUIREMENTS AND DETAILS ETC.
5. CASTELLATED BATTEN, DRAINAGE PLASTIC BATTEN OR APPROVED DRAINED BATTEN CAN BE USED WITH THIS SYSTEM.
6. TIMBER OR PACKERS CONTAINING CORROSIVE MATERIAL MUST BE SEPARATED FROM METAL CLADDING BY DPC, BUILDING WRAP PVC OR PAINTING.
7. ALTERNATIVELY REFER TO E2/AS1.
8. REFER TO UNDERLAY MANUFACTURERS REQUIREMENTS FOR INSTALLATION RECOMMENDATIONS.
9. JOINERY AND JOINERY FLASHING INTERFACE IS INDICATIVE ONLY. REFER TO SELECTED JOINERY MANUFACTURER'S RECOMMENDATIONS AND DETAILS.

JAMB FLASHING ON CAVITY

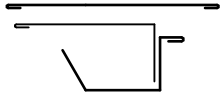

ALTERNATIVE JAMB FLASHING OPTION



GENERAL NOTES:

- These details to be read with Roofing Industries RI925 Product Technical Statement and Installation Guide.
- The building designer is ultimately responsible to ensure that the details used meet the requirements of the NZ Building Code for the specific project.
- Details of the supporting structure (including cavity battens if used) are indicative only and are the responsibility of the building designer. For steel framed buildings thermal break cavity battens may be required.
- Roof/wall underlay selection are the responsibility of the designer. Underlay to be installed in accordance with underlay manufacturer's recommendations and requirements.
- These details are for Roofing Industries profile/s as nominated and may not be applicable to other profiles.
- This drawing is the copyright of 'Roofing Industries' and can only be copied or reproduced with their permission.
- Further information can be obtained from the NZ Metal Roof & Wall Cladding Code of Practice: www.metalroofing.org.nz or E2/AS1 where applicable.
- Details are for steel-based materials, other substrates may require some changes.
- All dimensions are nominal.
- Fixing: The designer needs to check the screw manufacturers technical data of the selected screw type for the design wind load and the material being fastened to.

Copyright detail © 2026

Roofing Industries
roof.co.nz

RI925 VERTICAL WALL CLADDING ON TIMBER FRAMING
SILL FLASHING ON CAVITY (RECESSED WINDOW/DOOR) OPTION 2

Detail Number: RI-R925VWC-130C
Date drawn: 14/10/2026
Scale: 1 : 5@ A4

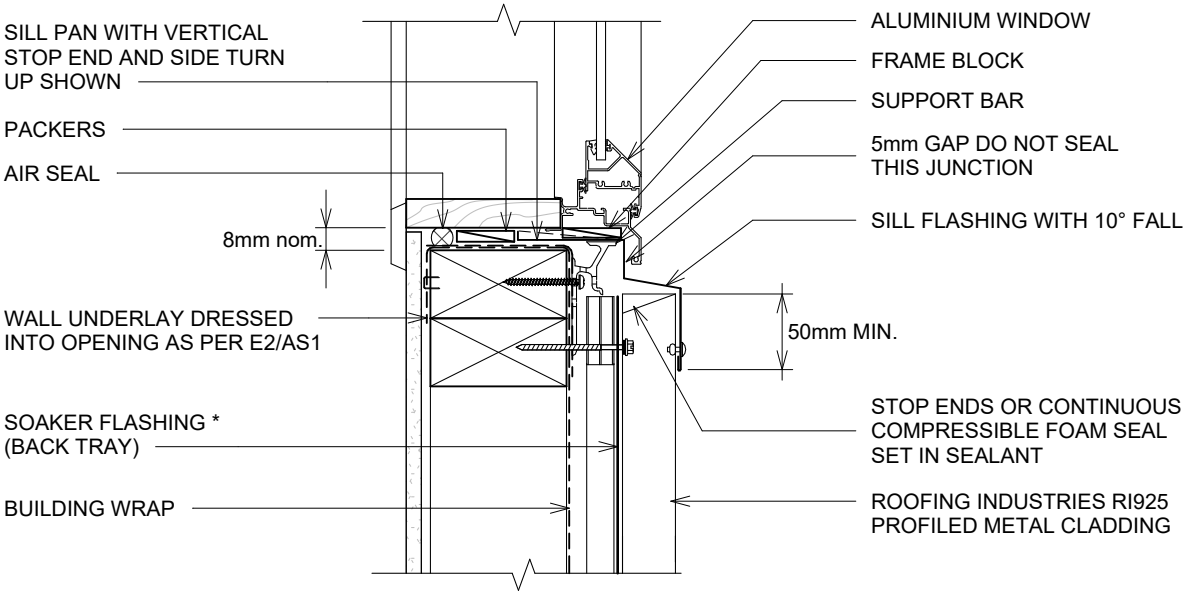

DETAIL ANNOTATION:

1. REFER TO E2/AS1 FOR GENERAL WINDOW OPENING FOR WRAPPING OF FRAMED OPENING PRIOR TO WINDOW INSTALLATION.
2. ARCHITRAVE'S ARE SHOWN FOR CONSISTENCY ONLY, DETAIL MAY BE USED WITH REBATED LINER.
3. LIAISE WITH WINDOW MANUFACTURER PRIOR TO INSTALLATION
4. REFER TO WINDOW MANUFACTURER REGARDING SUPPORT BARS REQUIREMENTS AND DETAILS ETC.
5. CASTELLATED BATTEN, DRAINAGE PLASTIC BATTEN OR APPROVED DRAINED BATTEN CAN BE USED WITH THIS SYSTEM.
6. TIMBER OR PACKERS CONTAINING CORROSIVE MATERIAL MUST BE SEPARATED FROM METAL CLADDING BY DPC, BUILDING WRAP PVC OR PAINTING.
7. ALTERNATIVELY REFER TO E2/AS1.
8. REFER TO UNDERLAY MANUFACTURERS REQUIREMENTS FOR INSTALLATION RECOMMENDATIONS.
9. JOINERY AND JOINERY FLASHING INTERFACE IS INDICATIVE ONLY. REFER TO SELECTED JOINERY MANUFACTURER'S RECOMMENDATIONS AND DETAILS.

SILL FLASHING

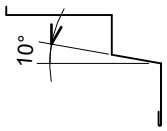

Sill flashings stop ended to receive jamb flashings (Dimensions are indicative only & show minimum lap covers)

* Back tray size may require to increase to ensure coverage at ends of head flashings. Back Tray to run from top of head flashing to ground or exit point. * (Dimensions are indicative only) * Turn down end of head flashing

GENERAL NOTES:

- These details to be read with Roofing Industries RI925 Product Technical Statement and Installation Guide.
- The building designer is ultimately responsible to ensure that the details used meet the requirements of the NZ Building Code for the specific project.
- Details of the supporting structure (including cavity battens if used) are indicative only and are the responsibility of the building designer. For steel framed buildings thermal break cavity battens may be required.
- Roof/wall underlay selection are the responsibility of the designer. Underlay to be installed in accordance with underlay manufacturer's recommendations and requirements.
- These details are for Roofing Industries profile/s as nominated and may not be applicable to other profiles.
- This drawing is the copyright of 'Roofing Industries' and can only be copied or reproduced with their permission.
- Further information can be obtained from the NZ Metal Roof & Wall Cladding Code of Practice: www.metalroofing.org.nz or E2/AS1 where applicable.
- Details are for steel-based materials, other substrates may require some changes.
- All dimensions are nominal.
- Fixing: The designer needs to check the screw manufacturers technical data of the selected screw type for the design wind load and the material being fastened to.

Copyright detail © 2026

Roofing Industries
roof.co.nz

RI925 VERTICAL WALL CLADDING ON TIMBER FRAMING ISOMETRIC FLASHING LAYOUT ON CAVITY (RECESSED WINDOW/DOOR) OPTION 2

Detail Number: RI-R925VWC-130D
Date drawn: 14/10/2026
Scale: 1 : 5@ A4

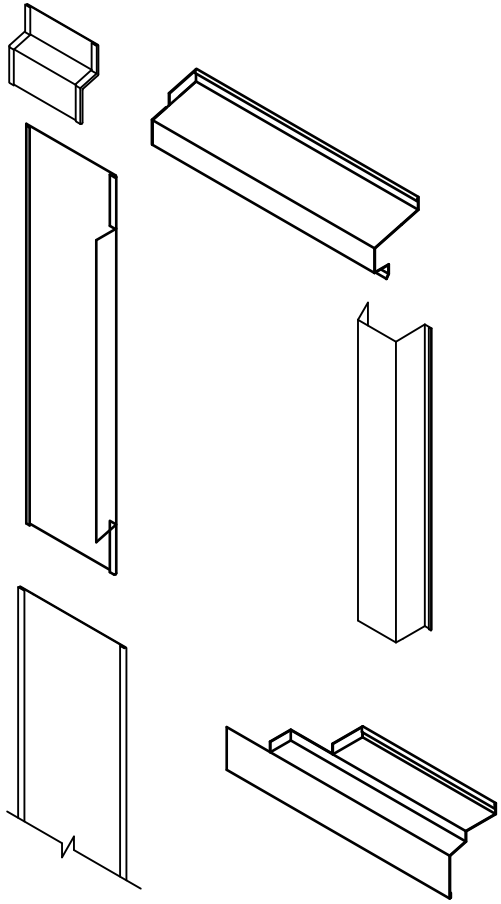

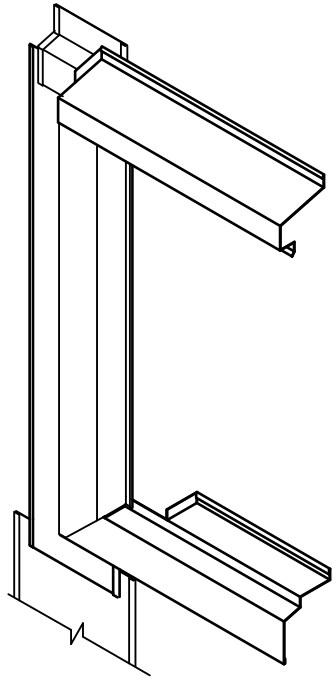

GENERAL NOTES:

- These details to be read with Roofing Industries RI925 Product Technical Statement and Installation Guide.
- The building designer is ultimately responsible to ensure that the details used meet the requirements of the NZ Building Code for the specific project.
- Details of the supporting structure (including cavity battens if used) are indicative only and are the responsibility of the building designer. For steel framed buildings thermal break cavity battens may be required.
- Roof/wall underlay selection are the responsibility of the designer. Underlay to be installed in accordance with underlay manufacturer's recommendations and requirements.
- These details are for Roofing Industries profile/s as nominated and may not be applicable to other profiles.
- This drawing is the copyright of 'Roofing Industries' and can only be copied or reproduced with their permission.
- Further information can be obtained from the NZ Metal Roof & Wall Cladding Code of Practice: www.metalroofing.org.nz or E2/AS1 where applicable.
- Details are for steel-based materials, other substrates may require some changes.
- All dimensions are nominal.
- Fixing: The designer needs to check the screw manufacturers technical data of the selected screw type for the design wind load and the material being fastened to.

Copyright detail © 2026

Roofing Industries
roof.co.nz

RI925 VERTICAL WALL CLADDING ON TIMBER FRAMING
HEAD FLASHING ON CAVITY (WINDOW/DOOR) OPTION 2

Detail Number: RI-R925VWC-140A
Date drawn: 14/10/2026
Scale: 1 : 5@ A4

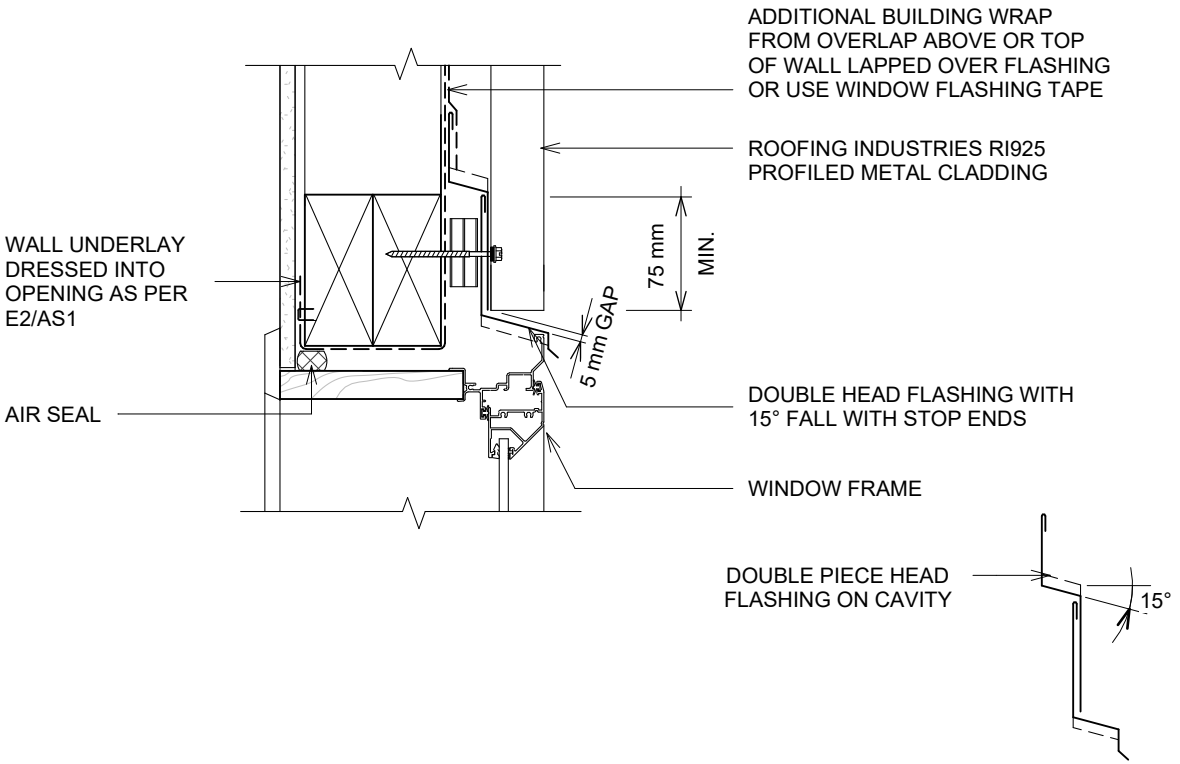

DETAIL ANNOTATION:

1. REFER TO E2/AS1 FOR GENERAL WINDOW OPENING FOR WRAPPING OF FRAMED OPENING PRIOR TO WINDOW INSTALLATION.
2. ARCHITRAVE'S ARE SHOWN FOR CONSISTENCY ONLY, DETAIL MAY BE USED WITH REBATED LINER.
3. LIAISE WITH WINDOW MANUFACTURER PRIOR TO INSTALLATION
4. SEAL HEAD FLASHING TO WINDOW IN VERY HIGH & EXTRA HIGH WIND ZONES.
5. TIMBER OR PACKERS CONTAINING CORROSIVE MATERIAL MUST BE SEPARATED FROM METAL CLADDING BY DPC, BUILDING WRAP PVC OR PAINTING.
6. CASTELLATED BATTEN, DRAINAGE PLASTIC BATTEN OR APPROVED DRAINED BATTEN CAN BE USED WITH THIS SYSTEM.
7. FASTENERS TO BE COMPATIBLE WITH MATERIAL BEING FIXED AND THE SUITABLE GRADE FOR THE ENVIRONMENT IN WHICH LOCATED
8. ALTERNATIVELY REFER TO E2/AS1.
9. REFER TO UNDERLAY MANUFACTURERS REQUIREMENTS FOR INSTALLATION RECOMMENDATIONS.
10. JOINERY AND JOINERY FLASHING INTERFACE IS INDICATIVE ONLY. REFER TO SELECTED JOINERY MANUFACTURER'S RECOMMENDATIONS AND DETAILS.

GENERAL NOTES:

- These details to be read with Roofing Industries RI925 Product Technical Statement and Installation Guide.
- The building designer is ultimately responsible to ensure that the details used meet the requirements of the NZ Building Code for the specific project.
- Details of the supporting structure (including cavity battens if used) are indicative only and are the responsibility of the building designer. For steel framed buildings thermal break cavity battens may be required.
- Roof/wall underlay selection are the responsibility of the designer. Underlay to be installed in accordance with underlay manufacturer's recommendations and requirements.
- These details are for Roofing Industries profile/s as nominated and may not be applicable to other profiles.
- This drawing is the copyright of 'Roofing Industries' and can only be copied or reproduced with their permission.
- Further information can be obtained from the NZ Metal Roof & Wall Cladding Code of Practice: www.metalroofing.org.nz or E2/AS1 where applicable.
- Details are for steel-based materials, other substrates may require some changes.
- All dimensions are nominal.
- Fixing: The designer needs to check the screw manufacturers technical data of the selected screw type for the design wind load and the material being fastened to.

Copyright detail © 2026

Roofing Industries
roof.co.nz

RI925 VERTICAL WALL CLADDING ON TIMBER FRAMING
JAMB FLASHING ON CAVITY (WINDOW/DOOR) OPTION 2

Detail Number: RI-R925VWC-140B
Date drawn: 14/10/2026
Scale: 1 : 5@ A4

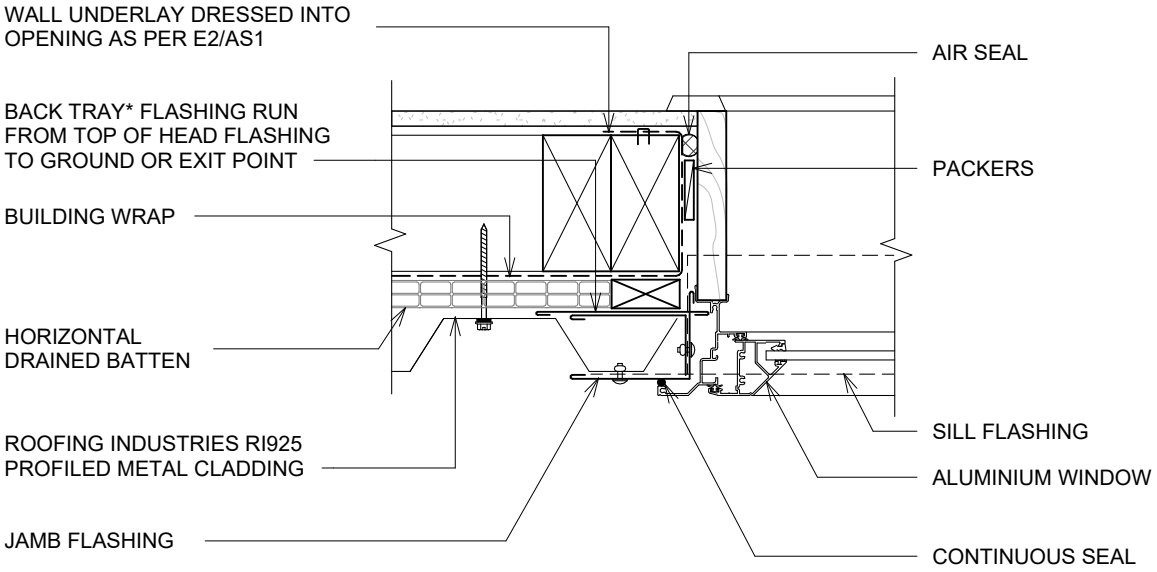

DETAIL ANNOTATION:

1. REFER TO E2/AS1 FOR GENERAL WINDOW OPENING FOR WRAPPING OF FRAMED OPENING PRIOR TO WINDOW INSTALLATION.
2. ARCHITRAVE'S ARE SHOWN FOR CONSISTENCY ONLY, DETAIL MAY BE USED WITH REBATED LINER.
3. LIAISE WITH WINDOW MANUFACTURER PRIOR TO INSTALLATION.
4. TIMBER OR PACKERS CONTAINING CORROSIVE MATERIAL MUST BE SEPARATED FROM METAL CLADDING BY DPC, BUILDING WRAP PVC OR PAINTING.
5. CASTELLATED BATTEN OR APPROVED DRAINED BATTEN CAN BE USED WITH THIS SYSTEM.
6. FASTENERS TO BE COMPATIBLE WITH MATERIAL BEING FIXED AND THE SUITABLE GRADE FOR THE ENVIRONMENT IN WHICH LOCATED.
7. ALTERNATIVELY REFER TO E2/AS1.
8. REFER TO UNDERLAY MANUFACTURERS REQUIREMENTS FOR INSTALLATION RECOMMENDATIONS.
9. JOINERY AND JOINERY FLASHING INTERFACE IS INDICATIVE ONLY REFER TO SELECTED JOINERY MANUFACTURER'S RECOMMENDATIONS AND DETAILS.

JAMB FLASHING ON CAVITY

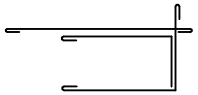

ALTERNATIVE JAMB FLASHING OPTION

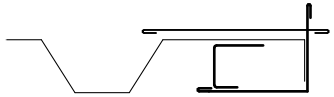

GENERAL NOTES:

- These details to be read with Roofing Industries RI925 Product Technical Statement and Installation Guide.
- The building designer is ultimately responsible to ensure that the details used meet the requirements of the NZ Building Code for the specific project.
- Details of the supporting structure (including cavity battens if used) are indicative only and are the responsibility of the building designer. For steel framed buildings thermal break cavity battens may be required.
- Roof/wall underlay selection are the responsibility of the designer. Underlay to be installed in accordance with underlay manufacturer's recommendations and requirements.
- These details are for Roofing Industries profile/s as nominated and may not be applicable to other profiles.
- This drawing is the copyright of 'Roofing Industries' and can only be copied or reproduced with their permission.
- Further information can be obtained from the NZ Metal Roof & Wall Cladding Code of Practice: www.metalroofing.org.nz or E2/AS1 where applicable.
- Details are for steel-based materials, other substrates may require some changes.
- All dimensions are nominal.
- Fixing: The designer needs to check the screw manufacturers technical data of the selected screw type for the design wind load and the material being fastened to.

Copyright detail © 2026

Roofing Industries
roof.co.nz

RI925 VERTICAL WALL CLADDING ON TIMBER FRAMING
SILL FLASHING ON CAVITY (WINDOW/DOOR) OPTION 2

Detail Number: RI-R925VWC-140C
Date drawn: 14/10/2026
Scale: 1 : 5@ A4

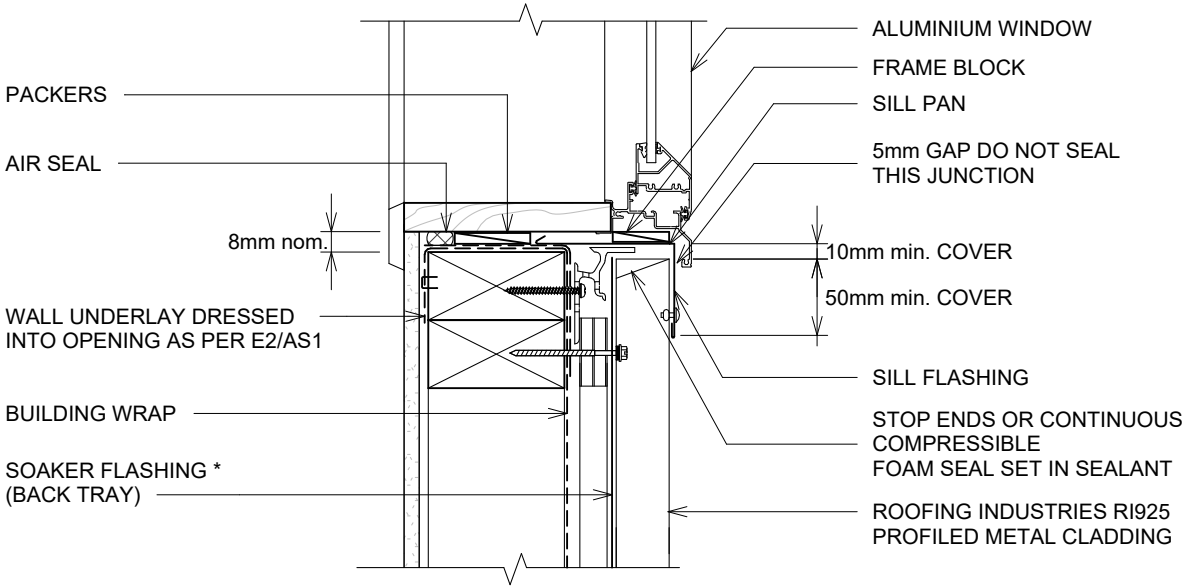

DETAIL ANNOTATION:

1. REFER TO E2/AS1 FOR GENERAL WINDOW OPENING FOR WRAPPING OF FRAMED OPENING PRIOR TO WINDOW INSTALLATION.
2. ARCHITRAVE'S ARE SHOWN FOR CONSISTENCY ONLY, DETAIL MAY BE USED WITH REBATED LINER.
3. LIAISE WITH WINDOW MANUFACTURER PRIOR TO INSTALLATION
4. CASTELLATED BATTEN, DRAINAGE PLASTIC BATTEN OR APPROVED DRAINED BATTEN CAN BE USED WITH THIS SYSTEM.
5. REFER TO WINDOW MANUFACTURER REGARDING SUPPORT BARS REQUIREMENTS AND DETAILS ETC.
6. TIMBER OR PACKERS CONTAINING CORROSIVE MATERIAL MUST BE SEPARATED FROM METAL CLADDING BY DPC, BUILDING WRAP PVC OR PAINTING.
7. ALTERNATIVELY REFER TO E2/AS1.
8. REFER TO UNDERLAY MANUFACTURERS REQUIREMENTS FOR INSTALLATION RECOMMENDATIONS.
9. JOINERY AND JOINERY FLASHING INTERFACE IS INDICATIVE ONLY. REFER TO SELECTED JOINERY MANUFACTURER'S RECOMMENDATIONS AND DETAILS.

Sill flashings stop ended to receive jamb flashings (Dimensions are indicative only & show minimum lap covers)

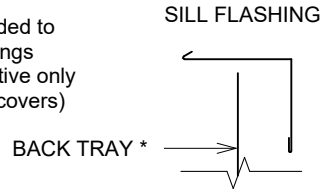

* Back tray size may require to increase to ensure coverage at ends of head flashings. Back Tray to run from top of head flashing to ground or exit point. * (Dimensions are indicative only) * Turn down end of head flashing

GENERAL NOTES:

- These details to be read with Roofing Industries RI925 Product Technical Statement and Installation Guide.
- The building designer is ultimately responsible to ensure that the details used meet the requirements of the NZ Building Code for the specific project.
- Details of the supporting structure (including cavity battens if used) are indicative only and are the responsibility of the building designer. For steel framed buildings thermal break cavity battens may be required.
- Roof/wall underlay selection are the responsibility of the designer. Underlay to be installed in accordance with underlay manufacturer's recommendations and requirements.
- These details are for Roofing Industries profile/s as nominated and may not be applicable to other profiles.
- This drawing is the copyright of 'Roofing Industries' and can only be copied or reproduced with their permission.
- Further information can be obtained from the NZ Metal Roof & Wall Cladding Code of Practice: www.metalroofing.org.nz or E2/AS1 where applicable.
- Details are for steel-based materials, other substrates may require some changes.
- All dimensions are nominal.
- Fixing: The designer needs to check the screw manufacturers technical data of the selected screw type for the design wind load and the material being fastened to.

Copyright detail © 2026

Roofing Industries
roof.co.nz

RI925 VERTICAL WALL CLADDING ON TIMBER FRAMING
ISOMETRIC FLASHING LAYOUT ON CAVITY (WINDOW/DOOR) OPTION 2

Detail Number: RI-R925VWC-140D
Date drawn: 14/10/2026
Scale: 1 : 5@ A4

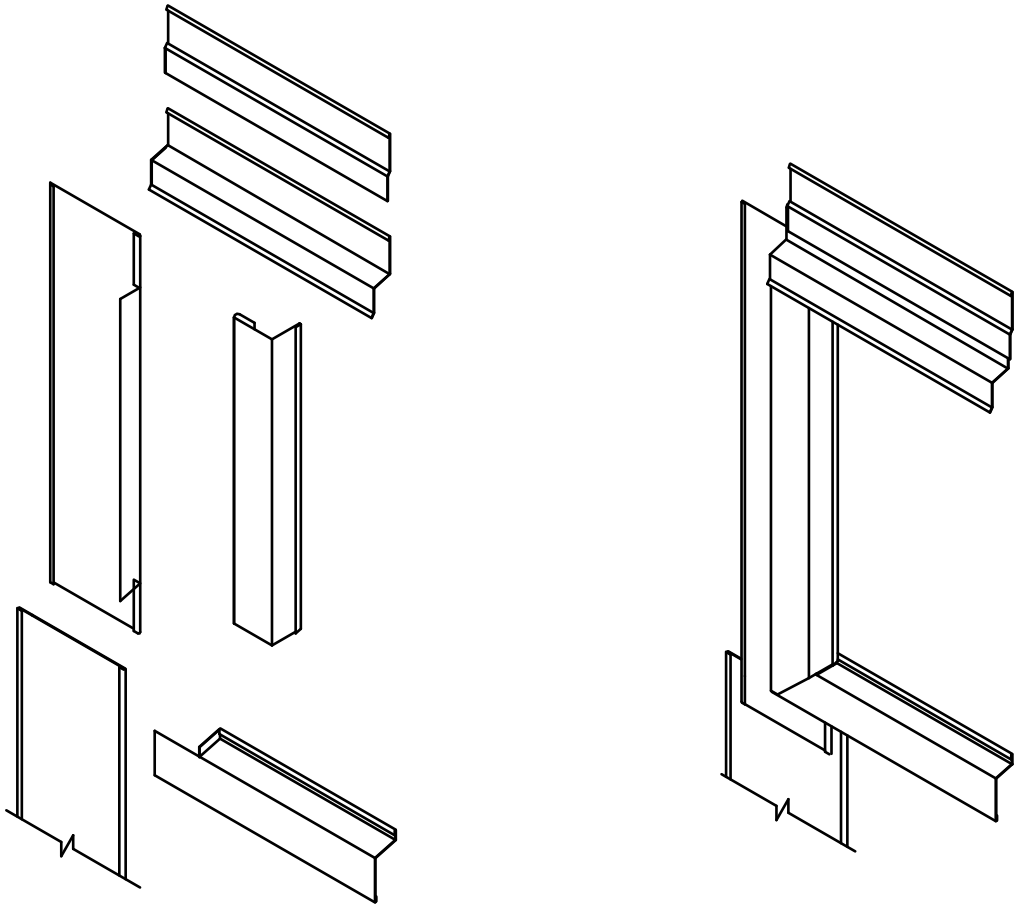

GENERAL NOTES:

- These details to be read with Roofing Industries RI925 Product Technical Statement and Installation Guide.
- The building designer is ultimately responsible to ensure that the details used meet the requirements of the NZ Building Code for the specific project.
- Details of the supporting structure (including cavity battens if used) are indicative only and are the responsibility of the building designer. For steel framed buildings thermal break cavity battens may be required.
- Roof/wall underlay selection are the responsibility of the designer. Underlay to be installed in accordance with underlay manufacturer's recommendations and requirements.
- These details are for Roofing Industries profile/s as nominated and may not be applicable to other profiles.
- This drawing is the copyright of 'Roofing Industries' and can only be copied or reproduced with their permission.
- Further information can be obtained from the NZ Metal Roof & Wall Cladding Code of Practice: www.metalroofing.org.nz or E2/AS1 where applicable.
- Details are for steel-based materials, other substrates may require some changes.
- All dimensions are nominal.
- Fixing: The designer needs to check the screw manufacturers technical data of the selected screw type for the design wind load and the material being fastened to.

Copyright detail © 2026

Roofing Industries
roof.co.nz

RI925 VERTICAL WALL CLADDING ON TIMBER FRAMING
METER BOX HEAD FLASHING ON CAVITY

Detail Number: RI-R925VWC-150A
Date drawn: 14/10/2026
Scale: 1 : 5@ A4

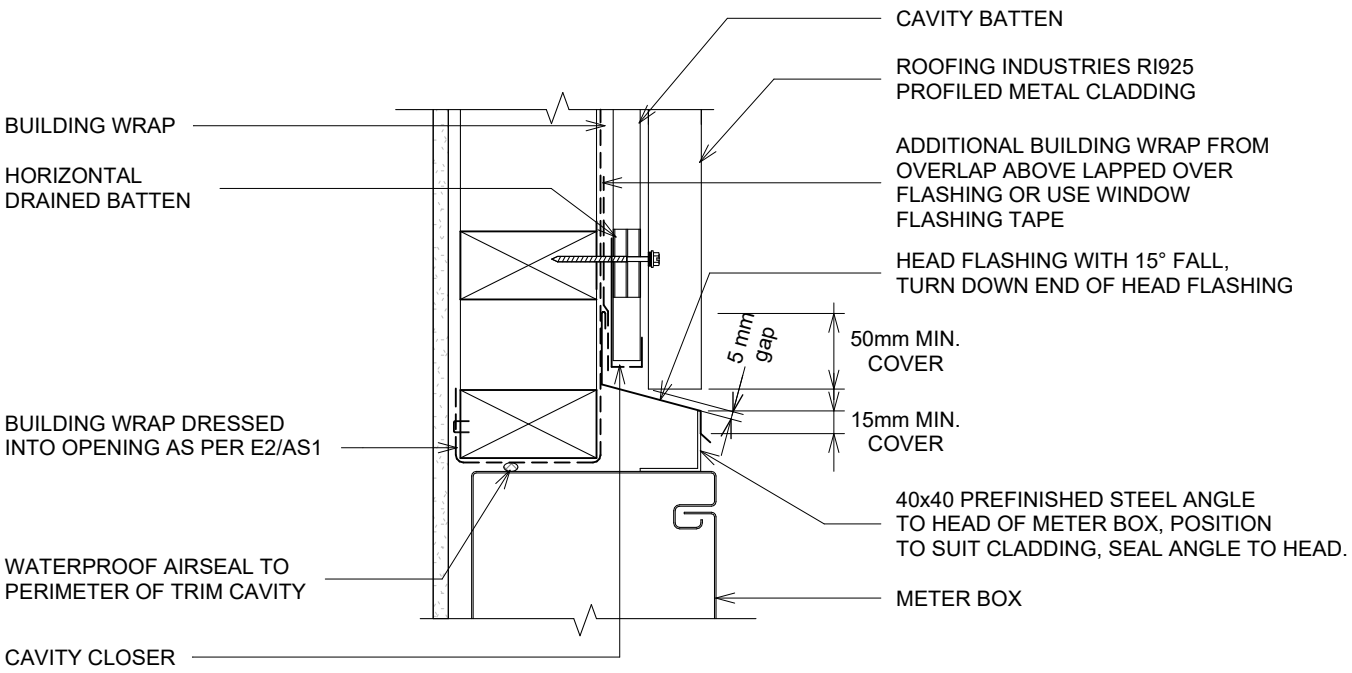

DETAIL ANNOTATION:

1. REFER TO E2/AS1 FOR GENERAL METER BOX AND SIMILAR PENETRATIONS / OPENINGS.
2. TIMBER CONTAINING CORROSIVE MATERIAL MUST BE SEPARATED FROM METAL CLADDING BY DPC, BUILDING WRAP, PVC OR PAINTING.
3. CASTELLATED BATTEN, DRAINAGE PLASTIC BATTEN OR APPROVED DRAINED BATTEN CAN BE USED WITH THIS SYSTEM.
4. FASTENERS TO BE COMPATIBLE WITH MATERIAL BEING FIXED AND THE SUITABLE GRADE FOR THE ENVIRONMENT IN WHICH LOCATED.
5. REFER TO UNDERLAY MANUFACTURERS REQUIREMENTS FOR INSTALLATION RECOMMENDATION.

METER BOX HEAD FLASHING



GENERAL NOTES:

- These details to be read with Roofing Industries RI925 Product Technical Statement and Installation Guide.
- The building designer is ultimately responsible to ensure that the details used meet the requirements of the NZ Building Code for the specific project.
- Details of the supporting structure (including cavity battens if used) are indicative only and are the responsibility of the building designer. For steel framed buildings thermal break cavity battens may be required.
- Roof/wall underlay selection are the responsibility of the designer. Underlay to be installed in accordance with underlay manufacturer's recommendations and requirements.
- These details are for Roofing Industries profile/s as nominated and may not be applicable to other profiles.
- This drawing is the copyright of 'Roofing Industries' and can only be copied or reproduced with their permission.
- Further information can be obtained from the NZ Metal Roof & Wall Cladding Code of Practice: www.metalroofing.org.nz or E2/AS1 where applicable.
- Details are for steel-based materials, other substrates may require some changes.
- All dimensions are nominal.
- Fixing: The designer needs to check the screw manufacturers technical data of the selected screw type for the design wind load and the material being fastened to.

Copyright detail © 2026

Roofing Industries
roof.co.nz

RI925 VERTICAL WALL CLADDING ON TIMBER FRAMING
METER BOX SIDE FLASHING ON CAVITY

Detail Number: RI-R925VWC-150B
Date drawn: 14/10/2026
Scale: 1 : 5@ A4

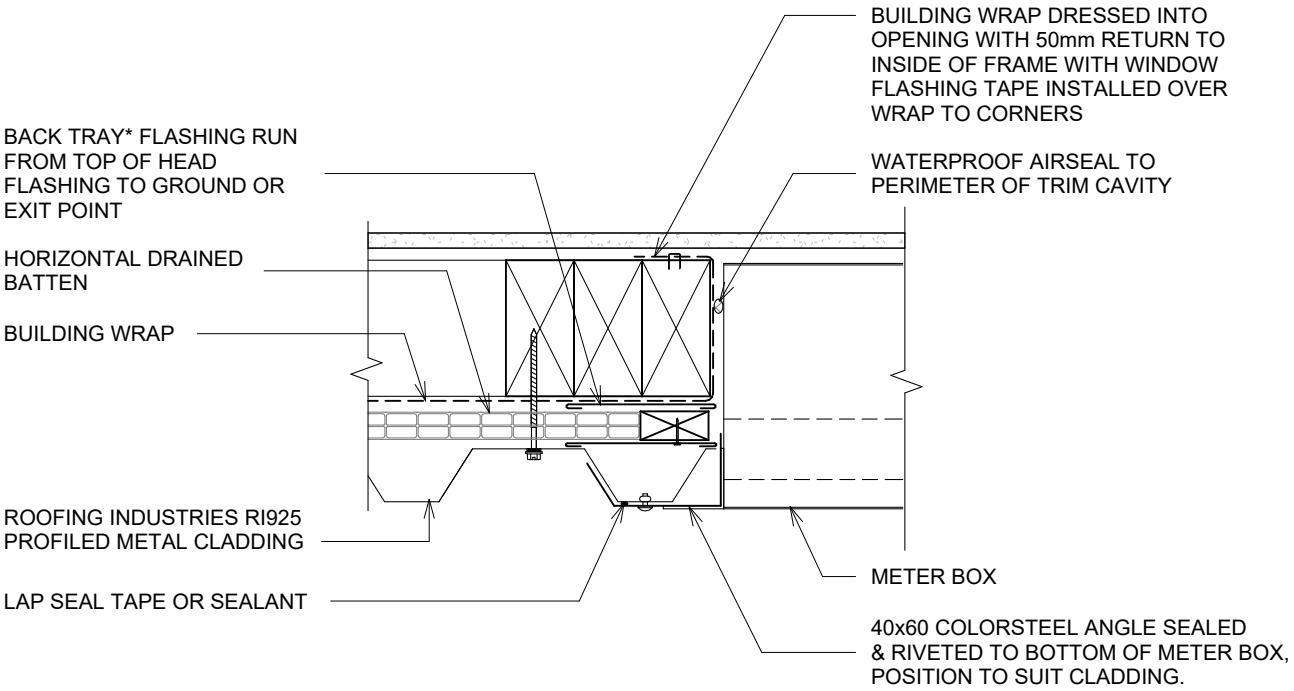

DETAIL ANNOTATION:

1. REFER TO E2/AS1 FOR GENERAL METER BOX AND SIMILAR PENETRATIONS / OPENINGS.
2. TIMBER CONTAINING CORROSIVE MATERIAL MUST BE SEPARATED FROM METAL CLADDING BY DPC, BUILDING WRAP, PVC OR PAINTING.
3. CASTELLATED BATTEN, DRAINAGE PLASTIC BATTEN OR APPROVED DRAINED BATTEN CAN BE USED WITH THIS SYSTEM.
4. FASTENERS TO BE COMPATIBLE WITH MATERIAL BEING FIXED AND THE SUITABLE GRADE FOR THE ENVIRONMENT IN WHICH LOCATED.
5. REFER TO UNDERLAY MANUFACTURERS REQUIREMENTS FOR INSTALLATION RECOMMENDATION.

METER SIDE FLASHING ON CAVITY

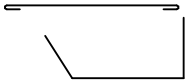

* Back tray size may require to increase to ensure coverage at ends of head flashing.

GENERAL NOTES:

- These details to be read with Roofing Industries RI925 Product Technical Statement and Installation Guide.
- The building designer is ultimately responsible to ensure that the details used meet the requirements of the NZ Building Code for the specific project.
- Details of the supporting structure (including cavity battens if used) are indicative only and are the responsibility of the building designer. For steel framed buildings thermal break cavity battens may be required.
- Roof/wall underlay selection are the responsibility of the designer. Underlay to be installed in accordance with underlay manufacturer's recommendations and requirements.
- These details are for Roofing Industries profile/s as nominated and may not be applicable to other profiles.
- This drawing is the copyright of 'Roofing Industries' and can only be copied or reproduced with their permission.
- Further information can be obtained from the NZ Metal Roof & Wall Cladding Code of Practice: www.metalroofing.org.nz or E2/AS1 where applicable.
- Details are for steel-based materials, other substrates may require some changes.
- All dimensions are nominal.
- Fixing: The designer needs to check the screw manufacturers technical data of the selected screw type for the design wind load and the material being fastened to.

Copyright detail © 2026

Roofing Industries
roof.co.nz

RI925 VERTICAL WALL CLADDING ON TIMBER FRAMING
METER BOX BASE FLASHING ON CAVITY

Detail Number: RI-R925VWC-150C
Date drawn: 14/10/2026
Scale: 1 : 5@ A4

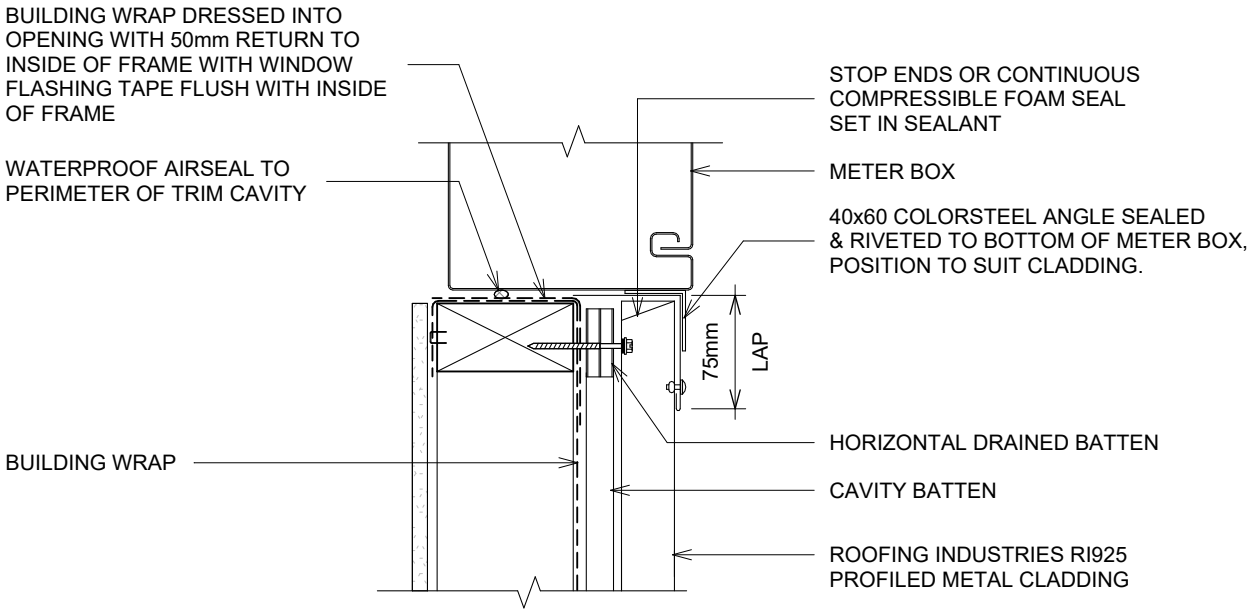

DETAIL ANNOTATION:

1. REFER TO E2/AS1 FOR GENERAL METER BOX AND SIMILAR PENETRATIONS / OPENINGS.
2. TIMBER CONTAINING CORROSIVE MATERIAL MUST BE SEPARATED FROM METAL CLADDING BY DPC, BUILDING WRAP, PVC OR PAINTING.
3. CASTELLATED BATTEN, DRAINAGE PLASTIC BATTEN OR APPROVED DRAINED BATTEN CAN BE USED WITH THIS SYSTEM.
4. FASTENERS TO BE COMPATIBLE WITH MATERIAL BEING FIXED AND THE SUITABLE GRADE FOR THE ENVIRONMENT IN WHICH LOCATED.
5. REFER TO UNDERLAY MANUFACTURERS REQUIREMENTS FOR INSTALLATION RECOMMENDATION.

METER BOX BASE FLASHING ON CAVITY



GENERAL NOTES:

- These details to be read with Roofing Industries RI925 Product Technical Statement and Installation Guide.
- The building designer is ultimately responsible to ensure that the details used meet the requirements of the NZ Building Code for the specific project.
- Details of the supporting structure (including cavity battens if used) are indicative only and are the responsibility of the building designer. For steel framed buildings thermal break cavity battens may be required.
- Roof/wall underlay selection are the responsibility of the designer. Underlay to be installed in accordance with underlay manufacturer's recommendations and requirements.
- These details are for Roofing Industries profile/s as nominated and may not be applicable to other profiles.
- This drawing is the copyright of 'Roofing Industries' and can only be copied or reproduced with their permission.
- Further information can be obtained from the NZ Metal Roof & Wall Cladding Code of Practice: www.metalroofing.org.nz or E2/AS1 where applicable.
- Details are for steel-based materials, other substrates may require some changes.
- All dimensions are nominal.
- Fixing: The designer needs to check the screw manufacturers technical data of the selected screw type for the design wind load and the material being fastened to.

Copyright detail © 2026

Roofing Industries
roof.co.nz