RI925 ROOFING ON TIMBER FRAMING
GUTTER OPTIONS 125 BOX GUTTER & OLD GOTHIC FOR TIMBER FASCIA

Detail Number: RI-R925R-240
Date drawn: 14/10/2026
Scale: 1 : 5@ A4

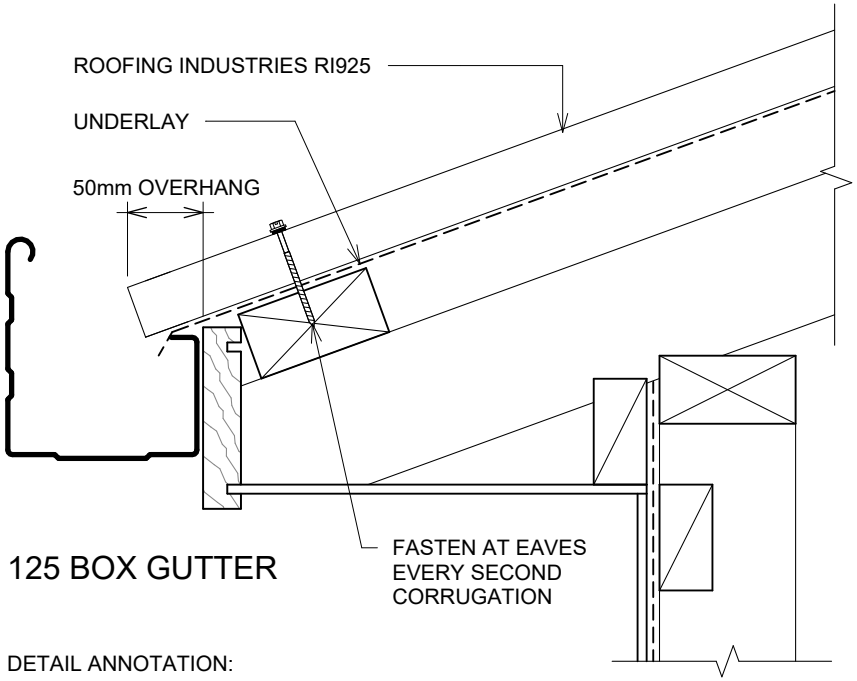

125 BOX GUTTER

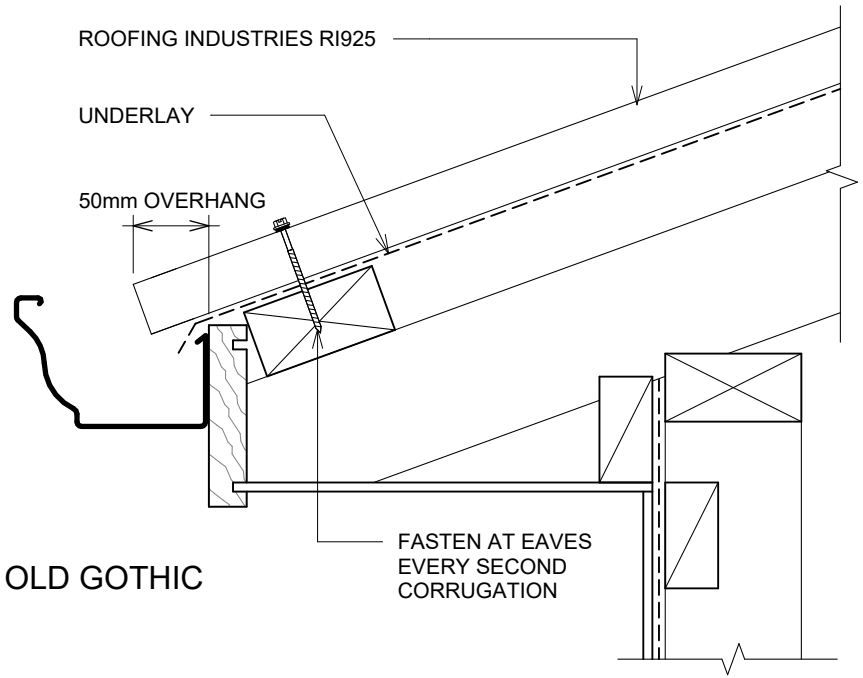

OLD GOTHIC

DETAIL ANNOTATION:

1. GUTTER SIZES TO BE CALCULATED FROM E1/AS1.
2. FASTENERS TO BE COMPATIBLE WITH MATERIAL BEING FIXED AND THE SUITABLE GRADE FOR THE ENVIRONMENT IN WHICH LOCATED.
3. OVERHANG TO GUTTER WHERE THE PITCH IS BELOW 10° AND THE ENDS OF THE RIBS ARE NOT BAFFLED BY THE SPOUTING. SHALL BE INCREASED TO 70MM. REFER TO NZMRM COP.
4. ALTERNATIVELY REFER TO MRM COP.
5. ALTERNATIVELY REFER TO E2/AS1.
6. REFER TO E2/AS1 REGARDING EAVES FLASHING REQUIREMENTS.

GENERAL NOTES:

- These details to be read with Roofing Industries RI925 Product Technical Statement and Installation Guide.
- The building designer is ultimately responsible to ensure that the details used meet the requirements of the NZ Building Code for the specific project.
- Details of the supporting structure (including cavity battens if used) are indicative only and are the responsibility of the building designer. For steel framed buildings thermal break cavity battens may be required.
- Roof/wall underlay selection are the responsibility of the designer. Underlay to be installed in accordance with underlay manufacturer's recommendations and requirements.
- These details are for Roofing Industries profile/s as nominated and may not be applicable to other profiles.
- This drawing is the copyright of 'Roofing Industries' and can only be copied or reproduced with their permission.
- Further information can be obtained from the NZ Metal Roof & Wall Cladding Code of Practice: www.metalroofing.org.nz or E2/AS1 where applicable.
- Details are for steel-based materials, other substrates may require some changes.
- All dimensions are nominal.
- Fixing: The designer needs to check the screw manufacturers technical data of the selected screw type for the design wind load and the material being fastened to.

Copyright detail © 2026

Roofing Industries
roof.co.nz