RI925 ROOFING ON TIMBER FRAMING
RAKING INTERNAL GUTTER

Detail Number: RI-R925R-230
Date drawn: 14/10/2026
Scale: 1 : 5@ A4

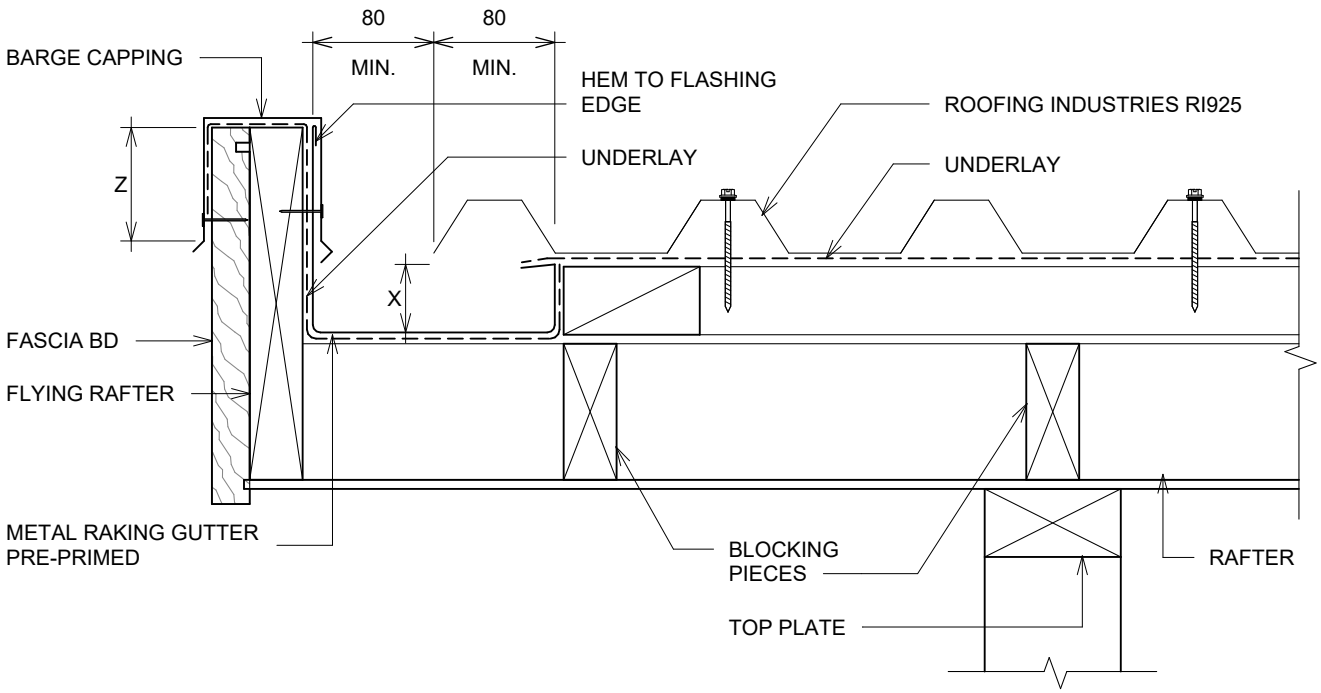

DETAIL ANNOTATION:

1. SITUATION 1, 2 & 3 AS PER E2/AS1 TABLE 4.5.1.1.
2. INCREASE DISTANCE 'Z' BY 25mm WHEN AGAINST A PROFILED SURFACE OR TO 100mm WHICHEVER IS THE LESSER.
3. INTERNAL GUTTER SHOULD BE MADE FROM NONFERROUS METAL'S COMPATIBLE WITH THE ROOFING MATERIAL.
4. ALTERNATIVELY REFER TO MRM COP.
5. ALTERNATIVELY REFER TO E2/AS1.
6. FASTENERS TO BE COMPATIBLE WITH MATERIAL BEING FIXED AND THE SUITABLE GRADE FOR THE ENVIRONMENT IN WHICH LOCATED.
7. REFER TO UNDERLAY MANUFACTURERS REQUIREMENTS FOR INSTALLATION RECOMMENDATIONS.
8. GUTTERS SHALL BE SIZED TO SUIT THE ROOF CATCHMENT AREA IN ACCORDANCE WITH E1/AS1 AND/OR E2/AS1.
9. ALLOW FOR SEPARATION FROM ANY CORROSIVE TIMBER TREATMENT.

SITE WIND ZONE (As per NZS3604)	MINIMUM	
	Z	X
SITUATION 1 (1)	50mm	20mm
SITUATION 2 (1)	70mm	20mm
SITUATION 3 (1)	90mm	20mm

GENERAL NOTES:

- These details to be read with Roofing Industries RI925 Product Technical Statement and Installation Guide.
- The building designer is ultimately responsible to ensure that the details used meet the requirements of the NZ Building Code for the specific project.
- Details of the supporting structure (including cavity battens if used) are indicative only and are the responsibility of the building designer. For steel framed buildings thermal break cavity battens may be required.
- Roof/wall underlay selection are the responsibility of the designer. Underlay to be installed in accordance with underlay manufacturer's recommendations and requirements.
- These details are for Roofing Industries profile/s as nominated and may not be applicable to other profiles.
- This drawing is the copyright of 'Roofing Industries' and can only be copied or reproduced with their permission.
- Further information can be obtained from the NZ Metal Roof & Wall Cladding Code of Practice: www.metalroofing.org.nz or E2/AS1 where applicable.
- Details are for steel-based materials, other substrates may require some changes.
- All dimensions are nominal.
- Fixing: The designer needs to check the screw manufacturers technical data of the selected screw type for the design wind load and the material being fastened to.

Copyright detail © 2026

Roofing Industries
roof.co.nz