DOW BUILDING SCIENCE

Construction and glass embedding technical manual

EMEAI

Table of contents

Introduction 3
The Dow system for contruction and glass embedding designs 3
Construction and glass embedding applications 4
Product information 4
Design of glass embedding structure 4
Health and safety aspects 4
Storage and transport 5
Compatibility 5
Preparation 5
- Prepare the working place 5
- Get necessary material and equipment ready 5
- Prepare the glass surface 5
- Prepare U-profile 6
- Mount glass panel 6

Embedding material application 6
Weatherproofing the assembly 8
Application video 8
After application 8
Procedure to follow in case of spill 9
Certification 9
Quality control logbook 9
Warranty 9
Glass embedding quality control log 10
Weatherproofing quality control log 11
For more information 12

Introduction

Glass as design element in modern facade architecture plays a key role and is becoming increasingly popular to realize aesthetically pleasant designs, with less frame, more glass and unlimited views. Glass balustrades in particular are an attractive feature of modern buildings. They can be mechanically clamped or fixed using a frame. One popular way of installing glass balustrades is to embed the glass into a U-profile at the bottom of the structure. DOW has developed a high strength, flowable polyurethane-based technology, which provides a fast way of realizing safe and long-lasting glass balustrades and other construction embedding designs. It is suitable for both interior and exterior applications, easy to handle and fast to apply, whether it is on site or in factory.

This technical manual introduces the Dow system for construction and glass embedding, including the different system components and the work procedure. It contains complementary information to the technical data sheet and the material safety datasheet, which are both downloadable from dow.com.

The Dow system for construction and glass embedding designs

The Dow system for construction and glass embedding makes use of the following components:

1. DOWSIL™ 375 Construction & Glass Embedding, a 2-component flowable polyurethane
2. DOWSIL™ R-40 Universal Cleaner for glass and metal surfaces
3. DOWSIL™ 791 Weatherproofing Sealant, a UV-resistant and durable top seal, well-established in high performance facade applications. Alternatively, for enhanced fire protection, silicone sealants from the Dow fire rated sealants range can be used.

The DOWSIL™ components in this system are all compatible with each other.

Next to those, a release agent (e.g. a silicone spray) is also required.

The proper way of applying the different components is explained in this document.

Construction and glass embedding applications

DOWSIL™ 375 Construction & Glass Embedding can be used for applications where glass is embedded into a U-profile at the base of the design, to hold the pane, limit glass movement and reduce deflection, contributing to a safe and durable structure. DOWSIL™ 375 Construction & Glass Embedding can be used in conjunction with flat, curved and laminated glass. The fast cure properties allow fast handling, which enhances efficiency and productivity. Optionally, a color paste can easily be added, if the color of the embedding material matters. Dow provides a 10 years product warranty on request on the DOWSIL™ system components, provided the conditions of use are met.

Product information

DOWSIL™ 375 Construction & Glass Embedding is a two-part polyurethane material. Part A contains the polyol while Part B, the hardener, contains the isocyanate (MDI-type). Information on the proper handling of the material is explained in the safety data sheet and in this manual. The container size takes into account the mixing ratio of 100:19 by weight (100:25 by volume). Part A is supplied in a 16kg pail while Part B, the hardener, is supplied in a 3 kg pail. When mixed, the polyol molecules react with the isocyanate, and this curing process results in a solid, hard and stiff thermoset polyurethane material. When thoroughly mixed, the product has a cream color. If a dark color (or black) is needed, a color paste can be added (see further in this manual). A few material properties are listed below. Please consult the technical datasheet for further information.

Property	Value
Before curing	
Viscosity	5000 mPa.s
Pot life	60 min.
Curing time at 20°C	7 h
After curing	
Hardness	70 shore D
Tensile strength	17 MPa
Elongation at break	11%

These are typical properties, not to be construed as specifications.

DOWSIL™ 791 Silicone Weatherproofing Sealant is a one component, low modulus, neutral-curing silicone sealant with a faster skinning time for general weathersealing applications.

DOWSIL™ R-40 Universal Cleaner is a specially formulated solvent blend designed to clean glass and metal profiles used in glass façade applications.

Design of glass embedding structure

The designer of the glass embedding structure should make sure that the design complies the local regulations and the prescriptions of any certification document that is relevant for the particular installation.

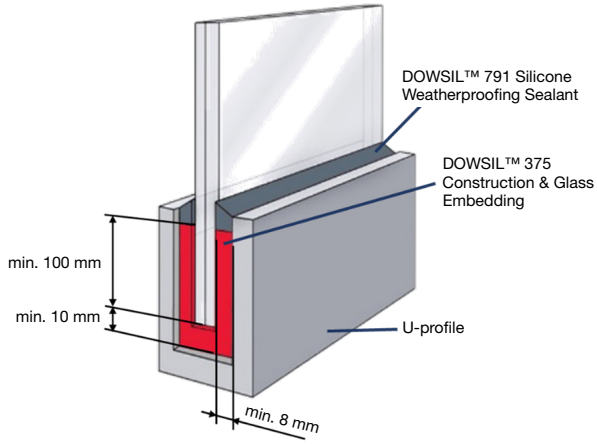

Figure 1: Schematic of a glass balustrade assembly using the Dow system for glass embedding

Beware that the building code in some countries may require a railing.

In any case the distance between the bottom of the glass laminate and the top surface of the DOWSIL™ 375 Construction & Glass Embedding should be at least 100 mm.

For convenient application, the groove between the laminate and the U-profile should be at least 8 mm wide, preferably 10 mm, and the distance between the bottom surface of the U-profile and the edge of the laminate should be at least 10 mm, preferably 15 mm.

Health and safety aspects

All polyurethane materials use isocyanates. MDI isocyanates can present respiratory hazards as particulates, vapors or aerosols. It is also a skin sensitizer. It is however perfectly possible to work with these materials in a completely safe manner by taking the appropriate precautions and applying the right procedures (see instructions further in this brochure).

Every person involved in the application of isocyanate-containing products has to be trained before the works begin. Dow is committed to the safety of the people who use and handle Dow's products, and therefore provides free advice and training material. ISOPA, the European Diisocyanate and Polyol Producers Association, which Dow is a member of, also provides for free materials in many different languages to inform and train applicators of polyurethane products (http://walkthetalk.isopa.org/basic_ safety_package.html).

DOWSIL™ 375 Construction & Glass Embedding part B has

a very low vapor pressure, which limits possible exposure to MDI by inhalation. Nevertheless, in order to limit the risk to a minimum, we recommend taking all precautions during storage, application and in case of spill described in the following sections of this document. The Material Safety Data Sheet of DOWSIL™ 375 Construction & Glass Embedding part B, which accompanies any shipment of the material and is directly downloadable from Dow.com website, provides detailed health and safety information and should be used as a reference in case of any unusual situation.

Once cured, the material is non-hazardous.

Storage and transport

Pails of DOWSIL™ 375 Construction & Glass Embedding should be stored in a dry place between 5 and 30 °C and should never be left outside exposed to rain or freezing temperature.

Care should be taken during transport to avoid any damage to the pails.

If, after a job using DOWSIL™ 375 Construction & Glass Embedding, there is some DOWSIL™ 375 hardener left in the pail, it should be closed tightly and stored for later use. Exposure to moisture degrades the material. If the pail is damaged and no longer closes tightly, transfer the material into another container which is airtight.

Compatibility

It must be ensured that the materials that come in contact with the system components, such as laminated glass interlayers and setting blocks, will not create incompatibilities.

Ask your Dow representative for a list of materials that have been tested and shown to be compatible with the Dow system for construction and glass embedding. If you intend to use materials which are not listed, send samples to the Dow technical service for compatibility testing.

Preparation

Prepare the working place

The area where the works will be carried out should be as dust-free as possible. Make sure that the floor is clear of any trip hazard.

Get necessary material and equipment ready

Before starting the work, it is important to get all necessary materials and equipment ready. Apart from the system materials and the glass laminates, the following items are needed:

- Masking tape
- Setting blocks
- Backer rods
- Paper wipes
- Electric drill equipped with a mixing paddle
- Safety goggles or face shield
- Respiratory mask
- Gloves that will not leave any arm/hand skin exposed
- Optional: mixing and pumping system
- Optional: color paste

Prepare the glass surface

In balustrade designs where DOWSIL™ 375 Construction & Glass Embedding is typically applied, adhesion between the product and the glass should be avoided to avoid stress in the glass and to make replacement of the glass panel easier if required. This is achieved using a release agent such as a silicone spray. Follow this procedure:

After glass cleaning, the first step is to cover the areas of the glass just above the area that will be in direct contact with DOWSIL™ 375 Construction & Glass Embedding.

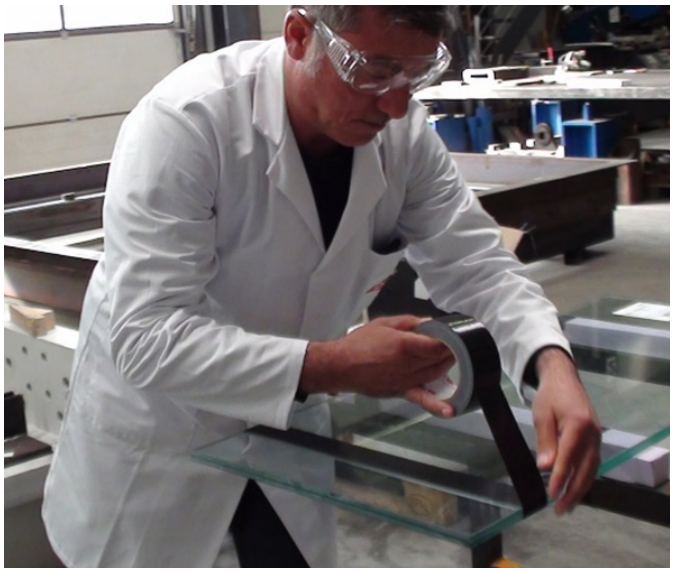

Figure 2: Apply tape to glass region that should not be exposed to release agent.

Dow recommends silicone spray Ambersil Pur 400 Silicone release agent for PU or any other silicone spray proactively approved by Dow laboratory. Dow recommends to test the non adhesion on float glass before to start the application.

Figure 3: Spray release agent on glass

Prepare U-profile

In order to make repairs easy, adhesion between the embedding material and the U-profiles should also be avoided. This is also achieved by applying a release agent, this time on the U-profiles.

Figure 4: Spray release agent on the surfaces of the U-profile

When the glass embedding material is applied, the U-profile will act as a casting cavity that will receive and hold the material in its uncured, liquid state for several hours. It is therefore important that possible leakage paths are removed. The ends of the U-profiles and the gaps between them should be blocked using tape or sealant.

Mount glass panel

A spacer material (e.g. some stacked pieces of setting blocks) should be placed at the bottom of the U-profile to allow the material to flow under the glass edge and fill up the other side of the glass panel. The distance between the glass panel edge and the bottom of the U-profile should be at least 10 mm and is preferably 15 mm.

Figure 5: Place setting blocks at the bottom of the U-profile

The glass panel is then inserted in the U-profile and positioned so that it is vertical, and its edge stands on the spacer blocks on the floor of the U-profile. Use setting blocks on both sides to achieve a vertical position right in the center of the profile. The hardness of the setting blocks that will remain in place after completion of the assembly should not exceed the hardness of DOWSIL™ 375 Construction & Glass Embedding (70 shore D). Connect adjacent glass panels with F-clamps, putting some relatively soft material between the clamp and the glass to avoid local stress. Insert pieces of backer rod in the U profile between adjacent glass panels and along the edge of the last panels (extremities of the balustrade).

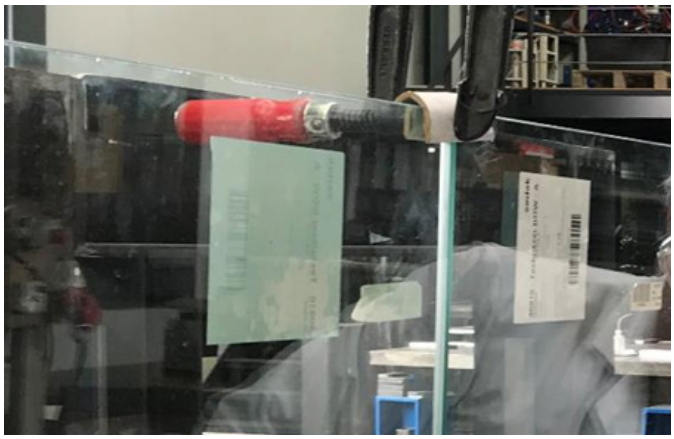

Figure 6: Connect adjacent panes using F-clamps

Use a level to check and possibly adjust the setting blocks to achieve exact position and perfect verticality.

Figure 7: Block ends of U-profile and adjust position with setting blocks

Embedding material application

Start by putting on the necessary personal protection equipment (PPE):

Wear long trousers and a long-sleeved top. Make sure that no part of your body is exposed (no short trousers, no crop tops, no open footwear, etc.). Wear gloves which are sufficiently long to ensure that no skin in the hand or wrist areas is exposed.

Wear a respiratory mask of type AP2 compliant with standard EN 14387 (mask with cartridges). Ensure that the cartridges

can perform their filtering function properly (they should not be past their use-by date, they should not be saturated as a result of previous uses or contamination).

Wear safety goggles or a face shield.

The mixing steps should only take place outside or in well-ventilated spaces. These are the steps:

1. (optional) If a dark-colored glass embedding material is preferred, add the required amount of the color paste (between 0.5 and 3%, depending on the level of pigmentation required) recommended by Dow to the content of the part A pail

Figure 8: Adding color paste to pail of part

2. (to be done regardless of whether color paste is used or not) Stir the contents of the pail of DOWSIL™ 375 Construction & Glass Embedding part A thoroughly with a drill equipped with a mixing paddle.

Figure 9: Mixing paddle

Figure 10: Mixing content of part A pail

The next steps depend on application method selected to mix and transfer the material into the U-profile. In order to minimize potential exposure to isocyanate, we recommend using a mixing and pumping system. Ask your Dow representative for advice on the best system for your needs. Extra care is needed to make sure the pump does not create incompatibility issues.

The mixing and pumping systems allow to automatically mix part A polyol and part B hardener in the right ratio and to directly inject the mixture in the U-profile.

Figure 11: Injecting the mixed part A and part B in the U-profile

For jobs which are too small to justify buying or renting an automatic pump, the mixing and transfer have to be done manually:

3. Pour the whole content of the DOWSIL™ 375 Construction & Glass Embedding part B pail into the pail of part A. The part A pail will accommodate the contents of both pails. There is no need to weigh or measure.

Stir the part A and part B materials together at constant speed until a homogeneous mixture is obtained, for at least 90 seconds. Check if the mixture color is uniform. If not, continue mixing until uniform.

Pour then the mixture by tilting the pail and guiding the liquid into the groove between the U-profile and the glass using a plate, preferably made of plastic.

Figure 12: Pour part B hardener in part A pail

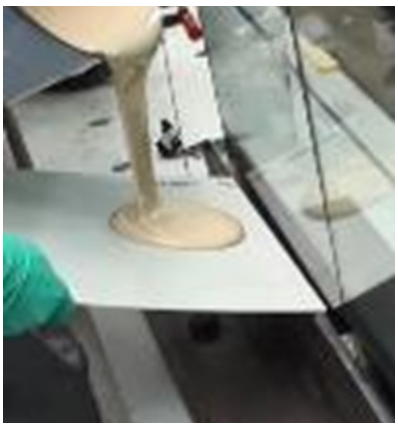

Figure 13: Using guiding plate method to fill U-profile with glass embedding material

Although the isocyanate reacts away once mixed and its concentration therefore decreases, it is recommended to keep all the PPE during the material transfer step.

Ensure that the material enters the U-profile, spreads well and levels out. For narrow gaps, the flow can be eased by inserting a narrow rod in the groove and gently moving sideways and up and down.

Figure 14: DOWSIL™ 375 Construction & Glass Embedding in U-profile

Continue until all gaps are filled, the glass embedding material reaches the required height and is level along the whole length of the U-profile, on both sides.

Carefully remove the protection tape.

Allow the material to cure for 7 hours.

Weatherproofing the assembly

DOWSIL™ 375 Construction & Glass Embedding should be protected from rain and UV radiation during long-term outdoor exposure. Therefore, after curing, it is necessary to make an effective weather sealant connecting the glass just above the glass embedding material and the U-profile.

Clean the areas of the glass and the U-profile that will be in contact with the weather seal using DOWSIL™ R-40 Universal Cleaner. Use the two cloths method: Dip a first cloth in DOWSIL™ R-40 Universal Cleaner, wipe the joint surfaces with sufficient force to remove dirt and contaminants, and then immediately wipe dry the solvent wet surface of the substrate with a separate clean, dry cloth

For the weather seal, DOWSIL™ 791 Weatherproofing Sealant should be used. It is fully compatible with DOWSIL™ 375 Construction & Glass Embedding and is a successful durable solution in the façade industry. Alternatively, if a higher degree of fire retardancy is required, a silicone sealant from the Dow fire-rated sealant range can be used.

Figure 15: Cleaning the glass before applying the weather seal

Consult Dow's Weatherproofing Manual to ensure the joint is properly designed. The weather sealant should only be applied when the glass embedding material is completely cured (at least 7 hours after the DOWSIL™ 375 Construction & Glass Embedding was mixed).

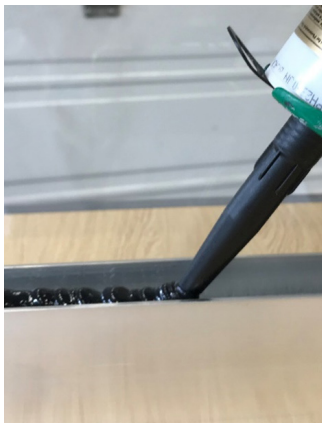

Figure 16: Applying the silicone sealant for weatherproofing

The use of a backer rod between the embedding material and the weather seal is recommended, and it is mandatory in case the glass length exceeds 1500 mm or the geometry of the cavity is such that the joint dimensions would be outside Dow's guidelines for proper joint design (see Dow's Weatherproofing Manual).

Application video

Please go and view the application video available on dow.com.

After application

When empty, the DOWSIL 375 Construction & Glass Embedding hardener container will still contain a small amount of isocyanate. Just like for all isocyanate-containing products, it must be considered a hazardous material and therefore should be disposed of as hazardous waste following the local regulations.

Any leftover mixed material should be allowed to cure in the pail (which originally only contained part A). After cure, the material is completely non-hazardous, and can be disposed of as such.

The mixing paddle should be left to drip dry to get rid of most of the material. A small amount of material might remain on the paddle and can be allowed to cure. It does not prevent subsequent re-use of the mixing paddle.

Any protective foil or tape soiled with mixed material can be left out for 7 hours so that the DOWSIL™ 375 Construction & Glass Embedding is completely cured, after which it can be disposed of as non-hazardous waste.

Although the recommended use of the material does not involve any cleaning or dissolving step, one can possibly keep a cleaning product ready for use in case of splash. Apply some cleaning product on a paper wipe or cloth, and wipe the splash with it.

Remove any splash soon after it occurred. Once cured, the material will adhere very well to many materials and can only be removed mechanically.

Procedure to follow in case of spill

As for all polyurethane-based chemical products, some precautions need to be taken to be ready in case of a spill.

A spill kit suitable for polyurethane materials and appropriate personal protection equipment including masks (type AP2 compliant with standard EN 14387) and gloves and should be kept ready for use close to the storage area or work area.

Special precautions should be taken in case of spill of DOWSIL™ 375 Construction & Glass Embedding part B as this contains an isocyanate which, as all isocyanates, is a hazardous material. First isolate the area and keep unnecessary and unprotected personnel from entering the area. Ventilate area of leak or spill. Put on protective clothes and personal protection equipment, including gloves, AP2 mask and safety goggles or face shield. Absorb the spilled liquid using the absorbent material in the spill kit. Collect everything in a metal or plastic container. The container should not be airtight (use for instance a ventilated cap). Wash the spill site with large quantities of water. Neutralize the surface by adding a suitable decontaminant solution. Consult the instructions in the safety data sheet for more details.

Certification

Balustrade assemblies made with DOWSIL™ 375 Construction & Glass Embedding have passed pendulum tests according to DIN 18008-4 at an independent test institute. Contact Dow or you Dow representative to receive a copy of the certification document.

Quality control logbook

Dow recommends that the applicator keeps a logbook with all relevant information on glass embedding jobs (see template at the end of this document). There should be a new entry in the logbook every time a new day of work starts and when there is a change in material lot number.

Testing for DOWSIL™ 375 Construction & Glass Embedding simply requires checking that the material has cured properly. The hardness after full cure should be measured using a shore D durometer on a flat test piece of at least 4 cm x 4 cm area and at least 6 mm thickness. The testing for the weather seal is the same as for any other weatherproofing job (see Dow's Weatherproofing Manual).

Warranty

Dow provides a 10 years product warranty on request on the DOWSIL™ system components, provided the conditions of use are met:

- The mixing procedure for DOWSIL™ 375 Construction & Glass Embedding as described in this technical manual, including mixing ratio and mixing time, is strictly followed
- A quality control logbook is kept and gets properly and timely updated.
- Only compatible glass interlayers, setting blocks and backer rods are used, as stated in documents issued by Dow's construction laboratory
- The cured DOWSIL™ 375 Construction & Glass Embedding should be completely covered by a weather seal
- DOWSIL™ R-40 Universal Cleaner is used to clean surface prior to application of the weather seal
- DOWSIL™ 791 Weatherproofing Sealant is used for the weather seal, or a silicone sealant from the Dow fire-rated sealant range
- The weather seal design follows the guidelines in Dow's Weatherproofing Manual
- For glass panels with lengths exceeding 1500mm, a backer rod is used between the glass embedding material and the

Glass embedding quality control log

Company name:

Project name and location:

Manual or Pump application (type):

Date	Time	Temperature and weather conditions	DOWSIL™ 375 Hardener lot number	DOWSIL™ 375 Polyol lot number	Uniform mixture color (y/n)?	Hardness after 2 Hours (min 25 Shore A) Hardness after 5 Hours (min 60 Shore A)	Type, brand and model of release agent	Type of glass and U-profile	Adhesion test on glass (%)

Weatherproofing quality control log

Company name:

Project name and location:

Date	Time	Name of applicator	Temperature and weather conditions	DOWSIL™ R-40 Cleaner lot number	DOWSIL™ 791 Sealant lot number	Backer rod type (if used)	Skin-over time	Type of glass and U-profile	Peel adhesion test result

For more information

weather seal

DOWSIL™

technologies by Dow

Learn more about Dow's full range of building solutions, including service and support, at **dow.com/buildingscience.**

Dow has sales offices, manufacturing sites and science and technology laboratories around the globe. Find local contact information at **dow.com/contactus.**

Dow Building Science website:
dow.com/buildingscience

Contact Dow Building Science:
dow.com/customersupport

Visit us on X
@DowBScience

Visit us on LinkedIn
Dow Building Science

Images: AdobeStock_267989493, AdobeStock_291304936

NOTICE: No freedom from infringement of any patent owned by Dow or others is to be inferred. Because use conditions and applicable laws may differ from one location to another and may change with time, Customer is responsible for determining whether products and the information in this document are appropriate for Customer's use and for ensuring that Customer's workplace and disposal practices are in compliance with applicable laws and other government enactments. The product shown in this literature may not be available for sale and/or available in all geographies where Dow is represented. The claims made may not have been approved for use in all countries. Dow assumes no obligation or liability for the information in this document. References to "Dow" or the "Company" mean the Dow legal entity selling the products to Customer unless otherwise expressly noted. NO WARRANTIES ARE GIVEN; ALL IMPLIED WARRANTIES OF MERCHANTABILITY OR FITNESS FOR A PARTICULAR PURPOSE ARE EXPRESSLY EXCLUDED.

®™ Trademark of The Dow Chemical Company ("Dow") or an affiliated company of Dow

© 2024 The Dow Chemical Company. All rights reserved.

2000024823-7284

Form No. 62-2175-01-0224 S2D