Cavity Sliders™

CaviLock

CL400® ADA Magnetic Bi-Parting



CL400® ADA Magnetic Bi-Parting

Our CL400 ADA Magnetic Bi-Parting Handle is a seamless addition to the CL400 Magnetic range, designed to provide more flexibility for building owners. You can now benefit from the same patented magnetic mechanism found in the CL400 Magnetic, with the added advantage of accessibility for individuals with disabilities.

Our CL400 ADA maintains compatibility with existing door cutouts and strikers, allowing it to be easily retrofitted over our standard CL400 flush handles.

Features

- Pull handle is easy to use - no tight pinching or twisting of the wrist.
- Specify with CS cavity slider and door for a complete solution.
- Suitable for cavity or surface sliding doors.
- Passage or Privacy configurations available.

Product Specifications

Privacy Snib Option

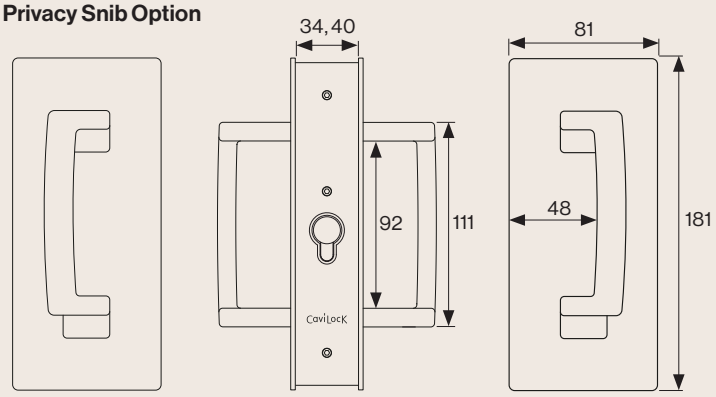

Privacy Bi-Parting Mate

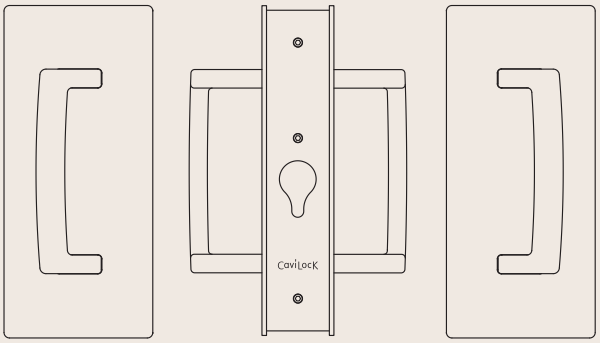

Finish Options


Bright Chrome


Satin Chrome


Oil Rubbed Bronze


Satin Nickel


Matte Black

Technical Information

Door Thickness	34-46mm
Suitable Door Types	Timber, Aluminium, Steel
Options	Passage (Magnetic latching) Privacy - Emergency/Snib

Compliance

Tested by Lifemark and designed to comply with the New Zealand Standard NZS4121:2001: Design for Access and Mobility

© All copyright and other property in this document is reserved by Cavity Sliders Ltd.
Details and specifications are subject to change without notice. Whilst all care is taken to ensure the accuracy of all information, no responsibility will be accepted for any errors or omissions.
Drawings are not to scale. Dimensions are in mm. NZ Patent No. 733386, 628616. 04/2025

CavitySliders.com

info@cavitysliders.co.nz 0800 754 337

NEW ZEALAND MADE

masterspec partner

Technical Detail

Door Cutout

The CL400® requires a simple door cutout. Complete instructions and templates are supplied with every handle.

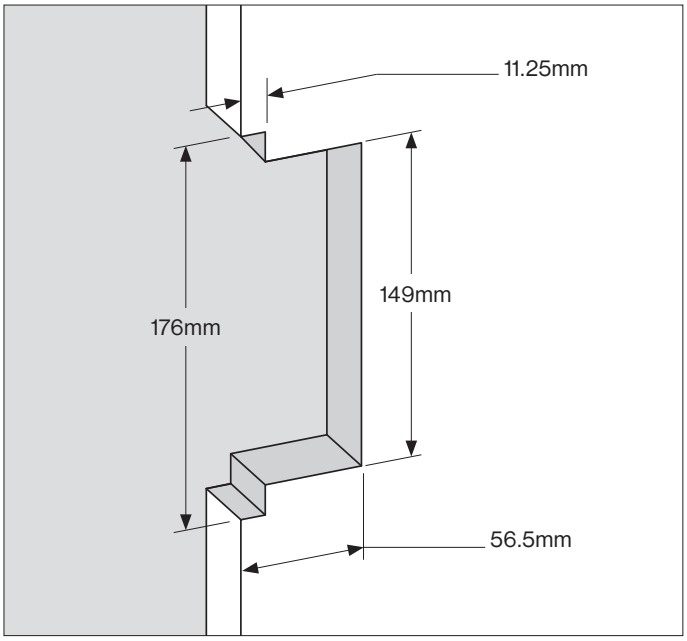

Face Plate

Two different face plate widths are available, to suit doors 34-46mm thick.

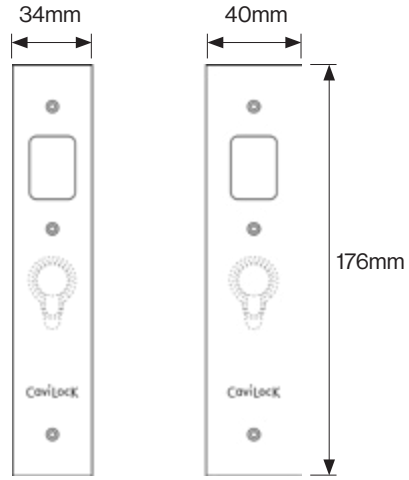

Suits doors
34 - 40mm

Suits doors
40 - 46mm

© All copyright and other property in this document is reserved by Cavity Sliders Ltd.
Details and specifications are subject to change without notice. Whilst all care is taken to ensure the accuracy of all information, no responsibility will be accepted for any errors or omissions.
Drawings are not to scale. Dimensions are in mm. NZ Patent No. 733386, 628616. 04/2025

CavitySliders.com

info@cavitysliders.co.nz 0800 754 337

NEW ZEALAND MADE

masterspec partner

CL400® Magnetic Bi-Parting Product Codes

Function	Finish	Door Thickness	
		34-40mm	40-46mm
Passage (non latching) 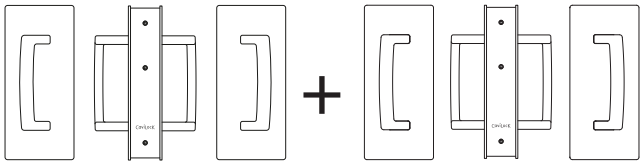	Bright Chrome	CL406D0025	CL406D0026
	Satin Chrome	CL406D0125	CL406D0126
	Oil Rubbed Bronze	CL406D0225	CL406D0226
	Satin Nickel	CL406D0325	CL406D0326
	Matte Black	CL406D0425	CL406D0426
Passage(Mag latching) 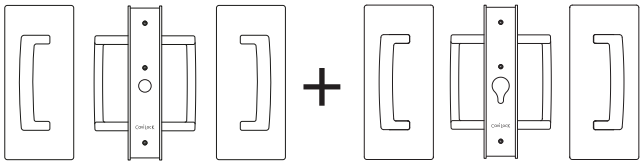	Bright Chrome	CL406D0028	CL406D0029
	Satin Chrome	CL406D0128	CL406D0129
	Oil Rubbed Bronze	CL406D0228	CL406D0229
	Satin Nickel	CL406D0328	CL406D0329
	Matte Black	CL406D0428	CL406D0429
Privacy Snib/Snib 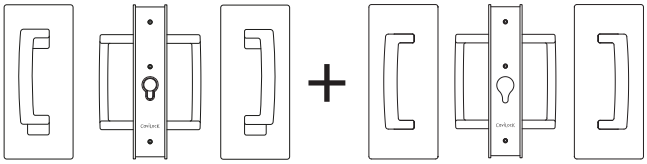	Bright Chrome	CL406D0035	CL406D0040
	Satin Chrome	CL406D0135	CL406D0140
	Oil Rubbed Bronze	CL406D0235	CL406D0240
	Satin Nickel	CL406D0335	CL406D0340
	Matte Black	CL406D0435	CL406D0440
Privacy Emerg/Snib 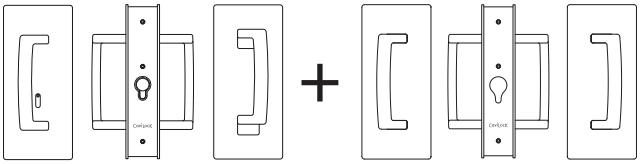	Bright Chrome	CL406D0038	CL406D0043
	Satin Chrome	CL406D0138	CL406D0143
	Oil Rubbed Bronze	CL406D0238	CL406D0243
	Satin Nickel	CL406D0338	CL406D0343
	Matte Black	CL406D0438	CL406D0443

© All copyright and other property in this document is reserved by Cavity Sliders Ltd.
Details and specifications are subject to change without notice. Whilst all care is taken to ensure the accuracy of all information, no responsibility will be accepted for any errors or omissions.
Drawings are not to scale. Dimensions are in mm. NZ Patent No. 733386, 628616. 04/2025

Specs and Instructions

CavitySliders.com

info@cavitysliders.co.nz 0800 754 337

NEW ZEALAND MADE

masterspec partner