Cavity Sliders™

CaviLock

CL400® ADA Magnetic Passage



CL400® ADA Magnetic Passage

Our CL400 ADA Magnetic Passage Handle is a seamless addition to the CL400 Magnetic range, designed to provide more flexibility for building owners. You can now benefit from the same patented magnetic mechanism found in the CL400 Magnetic, with the added advantage of accessibility for individuals with disabilities.

Our CL400 ADA maintains compatibility with existing door cutouts and strikers, allowing it to be easily retrofitted over our standard CL400 flush handles.

Features

- Pull handle is easy to use - no tight pinching or twisting of the wrist.
- Specify with CS cavity slider and door for a complete solution.
- Suitable for cavity or surface sliding doors.

Product Specifications

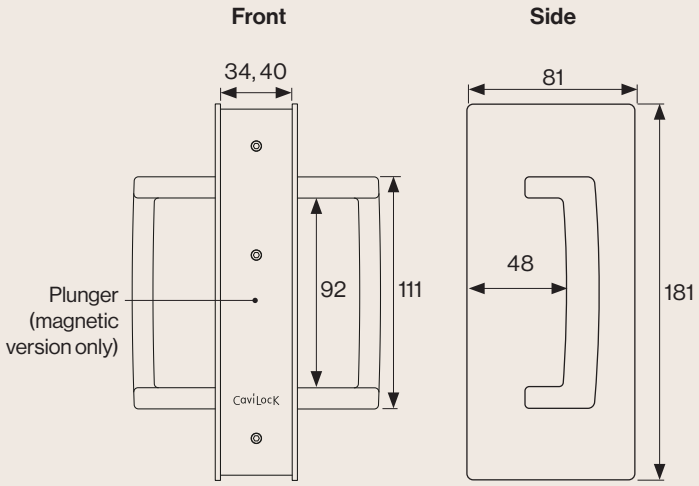

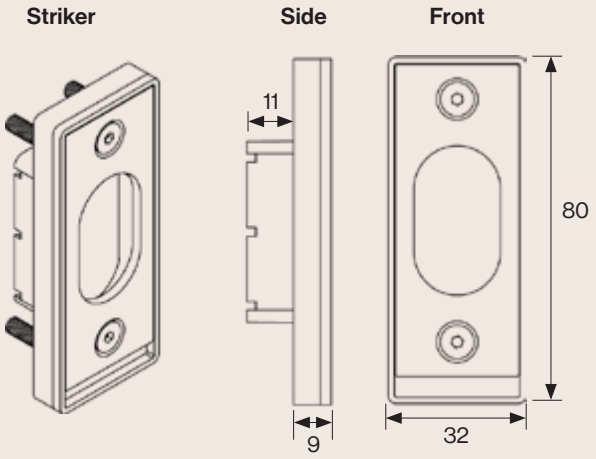

Finish Options

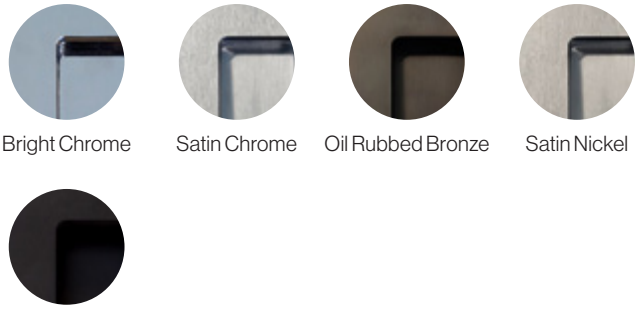

Bright Chrome | Satin Chrome | Oil Rubbed Bronze | Satin Nickel

Matte Black

Technical Information

Door Thickness	34-46mm
Suitable Door Types	Timber, Aluminium, Steel
Options	Blank/Blank (Non-latching) Blank/Blank (Magnetic latching)

Compliance

Tested by Lifemark and designed to comply with the New Zealand Standard NZS4121:2001: Design for Access and Mobility

© All copyright and other property in this document is reserved by Cavity Sliders Ltd.
Details and specifications are subject to change without notice. Whilst all care is taken to ensure the accuracy of all information, no responsibility will be accepted for any errors or omissions.
Drawings are not to scale. Dimensions are in mm. NZ Patent No. 733386, 628616. 04.2025

CavitySliders.com

info@cavitysliders.co.nz 0800 754 337

NEW ZEALAND MADE

masterspec partner

Technical Detail

Door Cutout

The CL400® requires a simple door cutout. Complete instructions and templates are supplied with every handle.

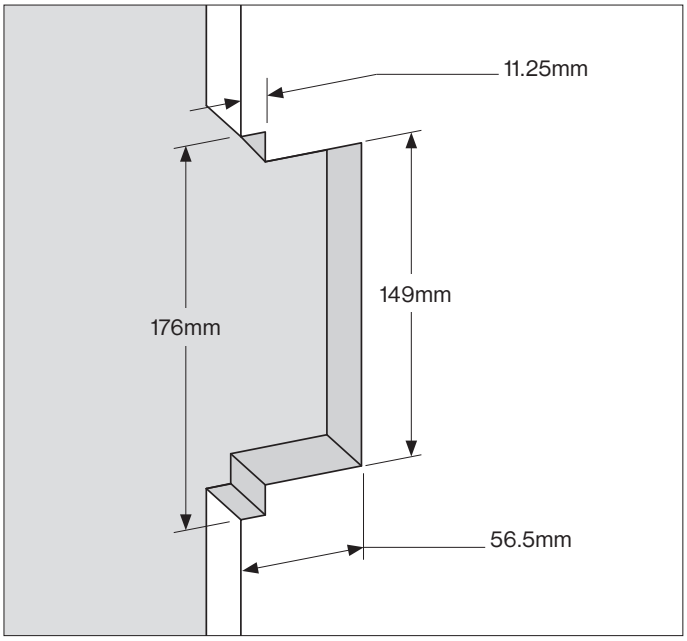

Face Plate

Two different face plate widths are available, to suit doors 34-46mm thick.

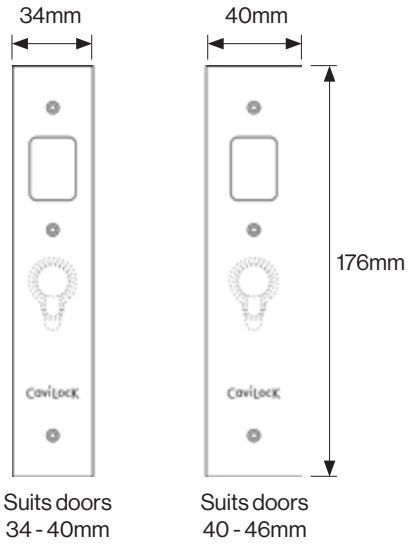

Striker

CL400 ADA Magnetic Privacy handles are supplied with a striker that is designed to sit flush with the face of the closing jamb.

Striker cutout template and instructions are supplied with your handle and cover installation into a flush or recessed closing jamb.

© All copyright and other property in this document is reserved by Cavity Sliders Ltd.
Details and specifications are subject to change without notice. Whilst all care is taken to ensure the accuracy of all information, no responsibility will be accepted for any errors or omissions.
Drawings are not to scale. Dimensions are in mm. NZ Patent No. 733386, 628616. 04.2025

CavitySliders.com

info@cavitysliders.co.nz 0800 754 337

NEW ZEALAND MADE

masterspec partner

CL400® Magnetic Passage Product Codes

Function		Finish	Door Thickness	
			34-40mm	40-46mm
Blank/Blank (Non-latching) Non-magnetic	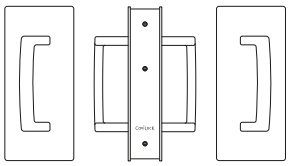	Bright Chrome	CL406A0025	CL406A0026
		Satin Chrome	CL406A0125	CL406A0126
		Oil Rubbed Bronze	CL406A0225	CL406A0226
		Satin Nickel	CL406A0325	CL406A0326
		Matte Black	CL406A0425	CL406A0426
Blank/Blank (Magnetic latching)	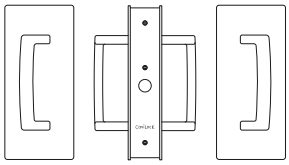	Bright Chrome	CL406A0028	CL406A0029
		Satin Chrome	CL406A0128	CL406A0129
		Oil Rubbed Bronze	CL406A0228	CL406A0229
		Satin Nickel	CL406A0328	CL406A0329
		Matte Black	CL406A0428	CL406A0429

© All copyright and other property in this document is reserved by Cavity Sliders Ltd.
Details and specifications are subject to change without notice. Whilst all care is taken to ensure the accuracy of all information, no responsibility will be accepted for any errors or omissions.
Drawings are not to scale. Dimensions are in mm. NZ Patent No. 733386, 628616. 04.2025

CavitySliders.com

info@cavitysliders.co.nz 0800 754 337

Specs and Instructions