Cavity Sliders™

WallMountTrack



WallMountTrack

Ideal for surface sliding applications, this track requires a strong wall to support a side-mounted track with the door above the opening. It features pre-drilled fixing holes for quick and easy installation and comes with a pre-finished clip-on aluminium pelmet and end caps to neatly conceal the top of the door, track, and running gear.

Versatile and adaptable, this wall-mounted track is perfect for commercial fit-outs, sheds, and showrooms.

Features

- Track is high-quality, heavy duty extruded aluminium.
- Available in cut lengths up to 6m long.
- Pelmet may be anodised or powder coated in a range of colour options. Anodising provides extra protection in high salt areas.
- Brush seals are available (one side of door only).
- The CS SmartMount system streamlines traditional installation processes and allows for easy removal of the door.

Product Specifications

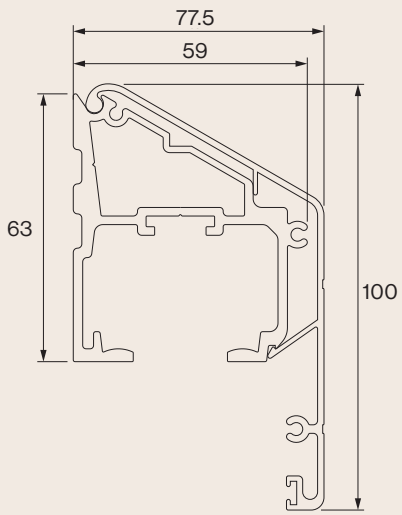

Technical Information

Maximum Door Thickness	40mm
Track Finish	Natural anodised
Pelmet Finish	Natural anodised (may be powder coated)
Maximum Door Weight (standard)	240kg
Maximum Door Weight (SofStop)	160kg

How to Specify

1. Specify track length
   Cut to specified length up to 6m long.
2. Choose Single or Bi-Parting carriage pack
   M6 (120kg), M8 (240kg) or SofStop (Single/Dual)
   - includes wheel pack, plus all required T-Guides and track stops, end caps and wall fixing screw sets
3. Specify pelmet/end cap finish
   (natural anodised or powder coat colour)

Installation Notes

CS WallMountTrack is screw fixed from the side through the pre-machined slots in the extrusion. Hole centres are pre-set at 300mm apart. For fixing to concrete walls, the use of masonry anchors is recommended. Pelmet and end caps are removable for future servicing requirements.

Configurations



Single | Bi-Parting | Corner Meeting

Operation



Standard | SofStop®

© All copyright and other property in this document is reserved by Cavity Sliders Ltd.
Details and specifications are subject to change without notice. Whilst all care is taken to ensure the accuracy of all information, no responsibility will be accepted for any errors or omissions.
Drawings are not to scale. Dimensions are in mm. **CS WALLMOUNTTRACK** (O.D. 2008) 11/2026

CavitySliders.com

info@cavitysliders.co.nz 0800 754 337

BRANZ Appraised
Appraisal No.900 [2020]

NEW ZEALAND MADE

masterspec partner