Cavity Sliders™

CaviRobe

Premier 3T-190™



Premier 3T-190™

The CS Premier 3T-190 is a complete wardrobe sliding door system including track, carriages and timber head and closing jambs. CaviRobe Wardrobe Sliders incorporate the same quality track and carriage system that is used in CS Cavity Sliders, allowing the confident use of over-height and over-width wardrobe doors.

Full length floor guides are used for all triple track set-ups.

Features

- Standard timber doors can be used, ensuring all your internal doors match.
- Available with timber or aluminium jambs in a range of timbers and colour finishes.
- Suits standard or custom sized doors up to 40mm thick.
- Available with the CS SmartMount System.

Product Specifications

Elevation - Standard Head Detail

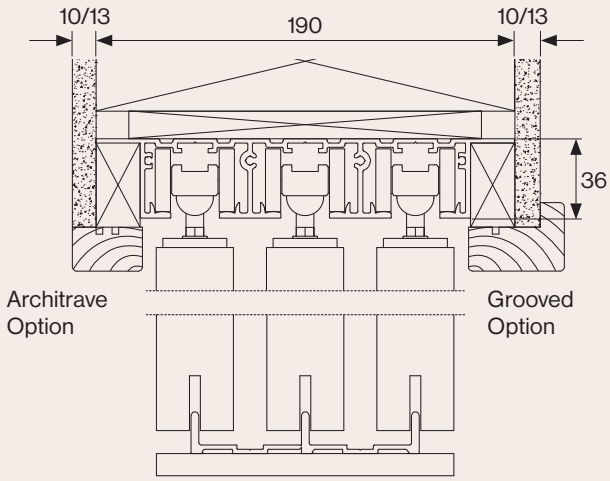

Elevation - Fixed Head Detail

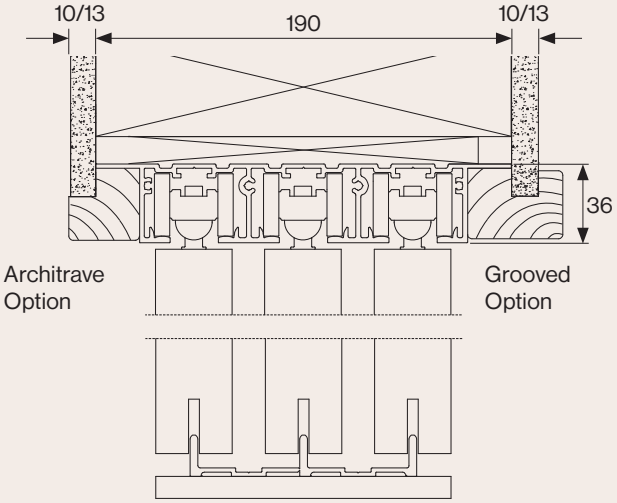

Options

Incorporate any of the architectural detail options below with the Premier 3T-190 wardrobe slider to create a specific look or to provide a unique solution to your design requirements.

Configurations

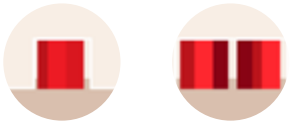

3 Doors 6 Doors

Operation



Standard SofStop®

Jamb Details



Architrave Grooved Fixed-Head ShadowLine



AluSealed® Full-Height NoClosing Jamb SquareStop

Technical Information

Maximum track length	10 metres
Framing material & size	190mm timber framing
Wall lining thickness	10mm or 13mm
Maximum door weight	240kg (Standard) 160kg (SofStop Dual Soft Open/Close)

© All copyright and other property in this document is reserved by Cavity Sliders Ltd.
Details and specifications are subject to change without notice. Whilst all care is taken to ensure the accuracy of all information, no responsibility will be accepted for any errors or omissions.
CS PREMIER 3T-190 (O.D. 1994) 11/2026

CavitySliders.com

info@cavitysliders.co.nz 0800 754 337

BRANZ Appraised Appraisal No.900 [2020] NEW ZEALAND MADE masterspec partner