180MM · TRUSS FASCIA

180 S-Line



A superb, low maintenance finish with crisp, clean lines — twin-swaged 180mm pre-painted steel on a hidden, fast clip system.

Ideally suited for new construction, and available with flat panel options.

- 180mm twin-swaged truss fascia
- Sloping soffit up to 28°
- Hidden, fast clip system
- 15 year perforation warranty
- Soaker or hand-cut mitre corners
- Bracket spacing up to 900mm

SPECIFY YOUR 180 S-LINE FASCIA

FINISH RANGE	FASCIA MATERIAL	COLOUR CHOICE	BRACKET	CORNER STYLING
CG Range	ColorCote MagnaFlow pre-painted G300 steel, min 200gsm	17 CG Colours	G300 steel	Soaker or hand-cut mitre
Designer Range	ColorCote MagnaFlow pre-painted G300 steel, min 200gsm or ColorSteel Maxam, min 150gsm	25 Designer Colours	G300 steel	Soaker or hand-cut mitre
Specialty Range	ColorCote MagnaFlow pre-painted G300 steel, min 200gsm, MagnaFlow Plus pre-painted G300 steel, min 200gsm* or ColorSteel Maxam, min 150gsm	20 Specialty Colours	G300 steel	Soaker or hand-cut mitre

* Limited colours available

COMPATIBLE SPOUTING

Chief · Big Chief · Quartz · Quartz Plus · Cube 125 · Halo 125 · Halo 150 · Halo 200 · Archie 125*

FASCIA HEIGHT

180mm

*Archie 125 limited to certain sizes. 180 S-Line is a regional profile — see availability below.

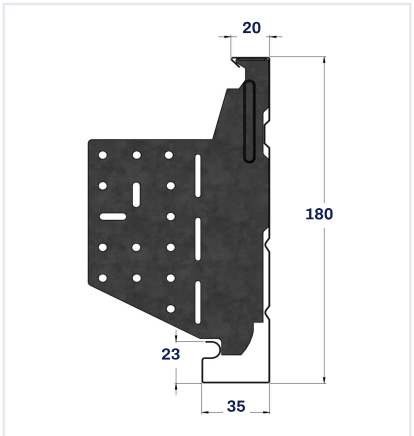

Fascia and truss bracket

The 180 S-Line panel clips onto a 1.15mm G300 steel bracket fixed to the rafter end, giving a 180mm face, a 20mm top return and a 35mm bottom hem with a 23mm soffit groove.

Brackets are spaced at up to 900mm and the soffit groove accommodates a sloping soffit up to 28°.

180 S-LINE IS AVAILABLE FROM THESE CONTINUOUS GROUP LOCATIONS

Gisborne
Whanganui
Canterbury
Hawke's Bay
Nelson
Otago
Taranaki
Marlborough
Southland
Manawatū
West Coast

0800 50 1993
www.continuous.co.nz
cg@continuous.co.nz

All information, images and drawings are correct at time of publication August 2026