TECHNICAL SPECIFICATION

180 S-Line 180mm Truss Fascia

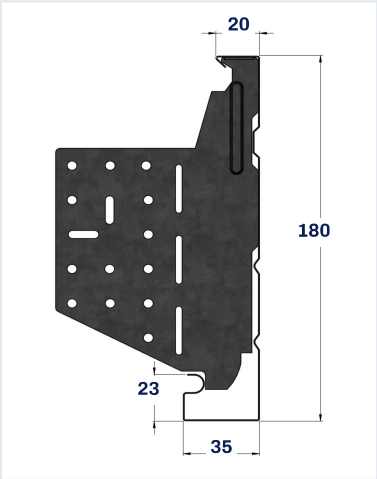

DIMENSIONS & INSTALLATION

Fascia height	**180mm**
Series	**Truss Series**
Maximum bracket spacing	**900mm**
Maximum soffit slope	**28°**
Corner styling	**Soaker or hand-cut mitre**
Finish ranges	**CG, Designer, Specialty**

Compatible spouting: Chief, Big Chief, Quartz, Quartz Plus, Cube 125, Halo 125, Halo 150, Halo 200 and Archie 125 (limited to certain sizes). Available in Gisborne, Hawke's Bay, Taranaki, Manawatū, Whanganui, Nelson, Marlborough, West Coast, Canterbury, Otago and Southland.

PRODUCT SPECIFICATIONS

Pre-painted steel	0.55mm G300 — ColorCote MagnaFlow with min 200gsm alloy/zinc/magnesium coating, Colorcote MagnaFlow Plus with min 200gsm alloy/zinc/magnesium with PVDF coating or ColorSteel Maxam with min 150gsm alloy/zinc/magnesium coating
Truss bracket	1.15mm G300 steel with min 125gsm alloy/zinc/magnesium protective coating
Recommended fixings	Minimum Class 4 screw and/or rivet fasteners, compatible with substrate and bracket material. Stainless steel fixings and components are not compatible with our materials
Set out requirements	Gable ends may require packing under the rafter. The soffit bearer can be fixed after fascia installation — consult your local branch. Install the bottom purlin plumb to the rafter end to reduce the cavity gap. The soffit groove allows a sloping soffit up to 28°. Soffit bearers are required on all hip corners. Metal fascia is a specialised system — DIY is not recommended, supported or approved; installation is available throughout New Zealand

SCOPE OF USE

Continuous Group fascia systems are intended to finish and protect the rafter ends at the perimeter of a building, to carry the spouting, and to close the soffit line. The fascia is positioned outside the building envelope.

NZBC COMPLIANCE

Test information from Pacific Coilcoaters and New Zealand Steel, combined with the past history of these products, indicates that provided use and maintenance follow current literature, Continuous Group systems can be expected to meet the performance criteria in clause E2 of the New Zealand Building Code.

DURABILITY

Pre-painted steel products are fit for purpose in environment zones B and C;* zone D may require a pre-approval warranty application based on the site address.*

*In all cases, areas with high wind and/or salt and/or thermal or industrial atmospheric conditions may require specific engineering design (SED). Reference: Section 4, "Durability", NZS 3604:2011.

MAINTENANCE

Regular maintenance ensures the useful life of the products. Minimum interval of every 6 months, or as often as needed to avoid build-up of dirt, salt and pollen on the fascia surface. Spray and rinse with water and, if necessary, scrub with a soft nylon brush. Specific products are listed in our Care & Maintenance document.

WARRANTY

MagnaFlow & Maxam pre-painted steel*

15 year Perforation warranty — exposure zones B, C and D.

10 year Paint warranty — exposure zones B, C and D.

*Subject to manual washing depending on exposure zone. Full details and conditions of our comprehensive Warranty are on our website.

0800 50 1993 · www.continuous.co.nz · cg@continuous.co.nz

All information, images and drawings are correct at time of publication August 2026