180MM · TRUSS FASCIA

180 N-LINE

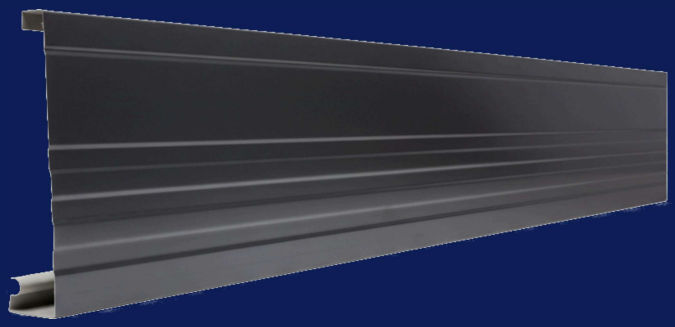

A 180mm swaged steel truss fascia with a hidden clip system — no timber, no painting, and crisp, clean lines the length of the roof.

Ideally suited for new builds, and pairs with the full residential and designer spouting range.

- 180mm swaged truss fascia
- Sloping soffit up to 30°
- Soaker or hand-cut mitre corners
- 15 year perforation warranty
- Hidden, fast clip bracket system
- Bracket spacing up to 900mm

SPECIFY YOUR 180 N-LINE FASCIA

FINISH RANGE	FASCIA MATERIAL	COLOUR CHOICE	CORNER STYLING
CG Range	ColorCote MagnaFlow pre-painted G300 steel, min 200gsm	17 CG Colours	Soaker or hand-cut mitre
Designer Range	ColorCote MagnaFlow pre-painted G300 steel, min 200gsm or ColorSteel Maxam, min 150gsm	25 Designer Colours	Soaker or hand-cut mitre
Specialty Range	ColorCote MagnaFlow pre-painted G300 steel, min 200gsm, MagnaFlow Plus pre-painted G300 steel, min 200gsm* or ColorSteel Maxam, min 150gsm	20 Specialty Colours	Soaker or hand-cut mitre

* Limited colours available

COMPATIBLE SPOUTING

Chief · Big Chief · Quartz · Quartz Plus · Cube 125 · Halo 125 · Halo 150 · Halo 200 · Archie Box*

FASCIA HEIGHT

180mm

*Archie Box limited to certain sizes. 180 N-Line is a regional profile — see availability below.

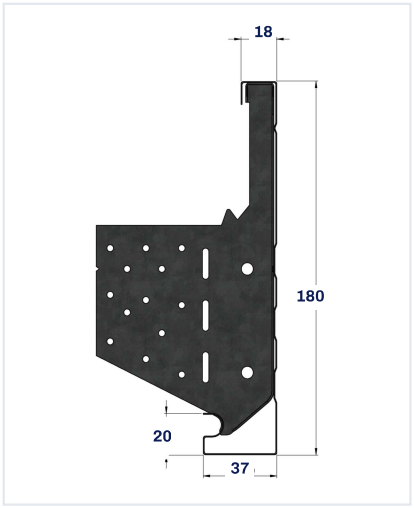

Fascia and truss bracket

The 180 N-Line panel clips onto a 0.95mm G300 steel truss bracket fixed to the rafter end, giving a 180mm face, an 18mm top return and a 37mm bottom hem with a 20mm soffit groove.

Brackets are spaced at up to 900mm and accommodate a soffit slope of up to 30°.

180 N-LINE IS AVAILABLE FROM THESE CONTINUOUS GROUP LOCATIONS

Auckland

0800 50 1993
www.continuous.co.nz
cg@continuous.co.nz

All information, images and drawings are correct at time of publication August 2026