140MM · TRUSS FASCIA

140 N-LINE

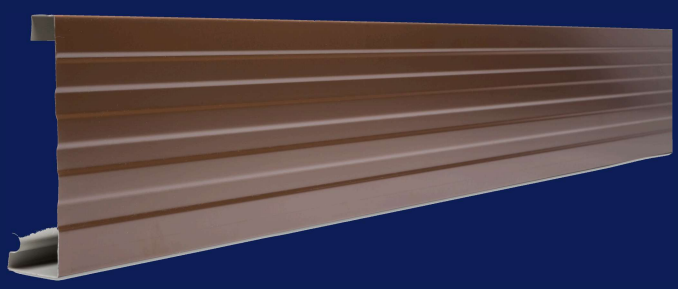

A 140mm ribbed steel truss fascia that fixes straight to the rafter ends — no timber, no painting, and a dead-straight line the length of the roof.

Ideally suited for new builds, and pairs with the full residential spouting range.

- 140mm ribbed truss fascia
- Soffit slope up to 30°
- Soaker or hand-cut mitre corners
- 15 year perforation warranty
- Bracket spacing up to 900mm
- Never needs painting

SPECIFY YOUR 140 N-LINE FASCIA

FINISH RANGE	FASCIA MATERIAL	COLOUR CHOICE	CORNER STYLING
CG Range	ColorCote MagnaFlow pre-painted G300 steel, min 200gsm	17 CG Colours	Soaker or hand-cut mitre
Designer Range	ColorCote MagnaFlow pre-painted G300 steel, min 200gsm or ColorSteel Maxam, min 150gsm	25 Designer Colours	Soaker or hand-cut mitre
Specialty Range	ColorCote MagnaFlow pre-painted G300 steel, min 200gsm, MagnaFlow Plus pre-painted G300 steel, min 200gsm* or ColorSteel Maxam, min 150gsm	20 Specialty Colours	Soaker or hand-cut mitre

* Limited colours available

COMPATIBLE SPOUTING

Chief · Big Chief · Quartz · Quartz Plus · Cube 125 · Halo 125 · Halo 150 · Archie Box*

FASCIA HEIGHT

140mm

*Archie Box limited to certain sizes. 140 N-Line is a regional profile — see availability below.

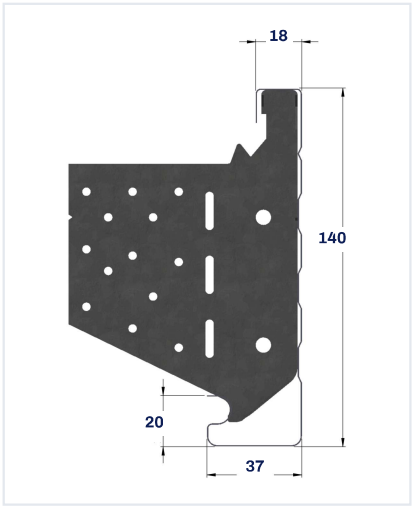

Fascia and truss bracket

The 140 N-Line panel clips onto a 0.95mm G300 steel truss bracket fixed to the rafter end, giving a 140mm face, an 18mm top return and a 37mm bottom hem that carries the soffit.

Brackets are spaced at up to 900mm and accommodate a soffit slope of up to 30°.

140 N-LINE IS AVAILABLE FROM THESE CONTINUOUS GROUP LOCATIONS

Northland
Auckland
Waikato
Bay of Plenty
Kapiti Coast
Wairarapa
Wellington

0800 50 1993
www.continuous.co.nz
cg@continuous.co.nz

All information, images and drawings are correct at time of publication August 2026