Aluminium Frames

Apricus have upgraded the collector frames and mounting systems to marine grade, anodised aluminium extrusion frames. These are certified to AS/NZS 1170.2:2011.

All collectors come with a Standard Frame. These are fixed to the roof by drilling through the front tracks (running vertically) in line with purlins and fixed with Tek screws.

Standard Frame
Supplied with all Apricus collectors

Pitched Frames

Apricus collectors can be raised to increase the angle of installation on roofs with less than 20° pitch or to optimise winter performance.
The collectors are raised on two rear legs, with an X brace for stability. Rear legs can be easily shortened and new holes drilled to optimise final installation angle.
There are four leg lengths available giving 21° to 49° angles (see overleaf).

Mounting Systems

There are three Mounting Systems for attaching the frame on to the roof. Choose the most appropriate system depending on roof substrate. All systems can be combined with Standard Frame for flat to roof mounting.

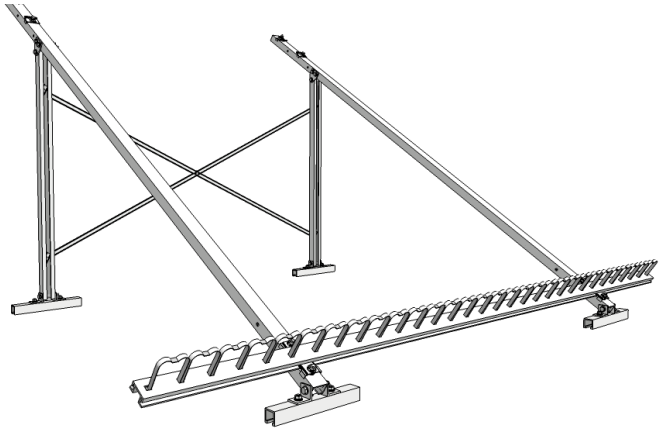

Short Rails x 4 - 250mm
Install on corrugated iron to cover 3 corrugates

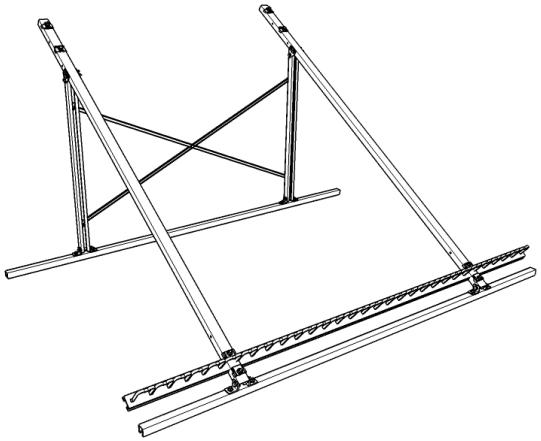

Roof Rails x 2 - Collector Width
Install on wider profile metal roofs to span ridges or on membrane roofs

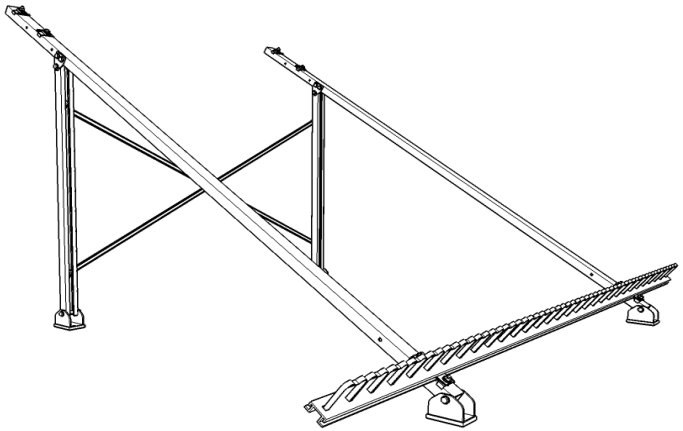

U Feet x 4
Install on concrete, asphalt shingle

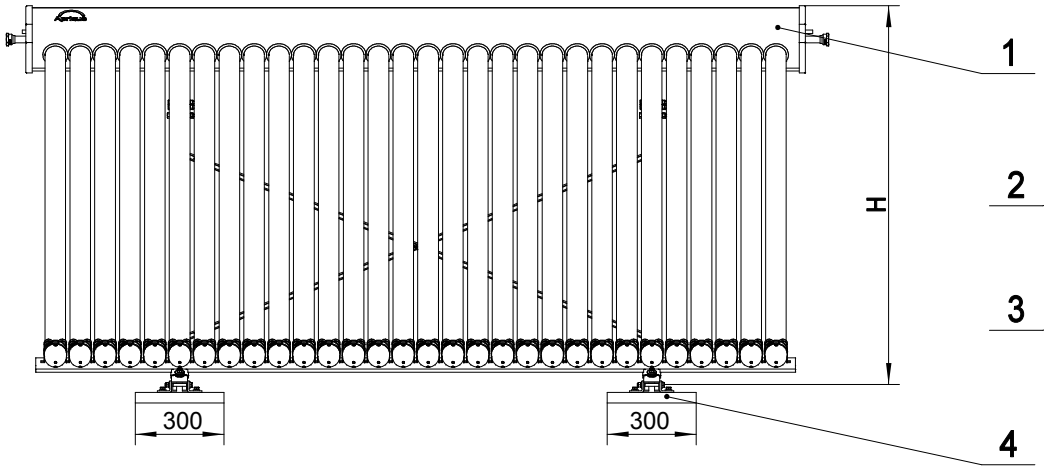

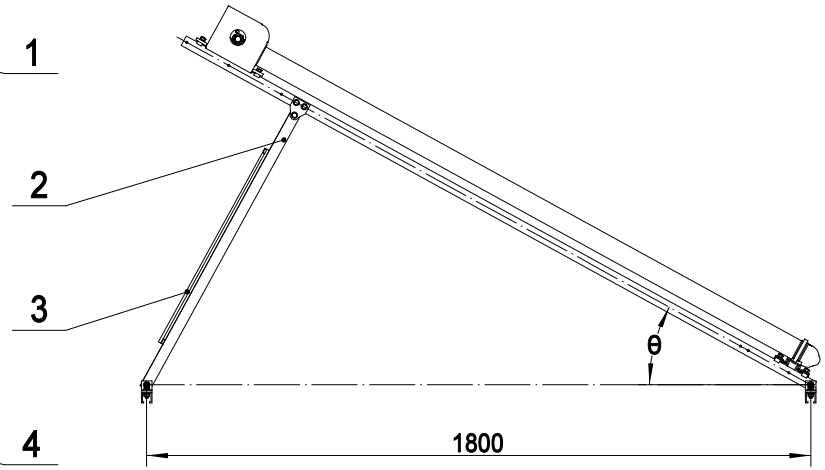

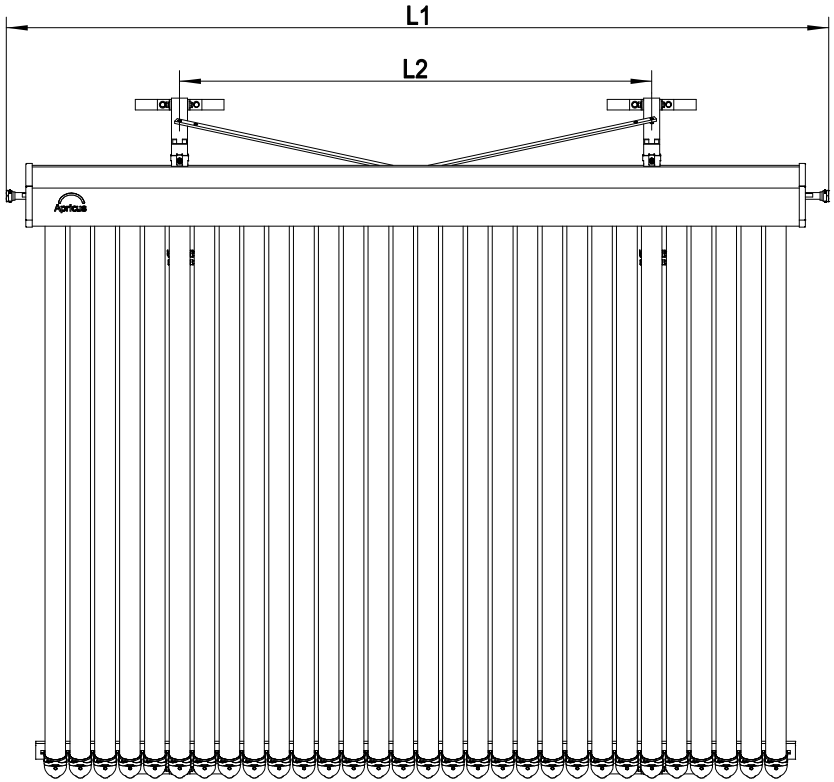

Collector Model	L1	L2
ETC-20T	1440	1055
ETC-30T	2140	1330

Rear Leg Length	θ	H
8D	7.7	406.3
20D	21.6	854.8
30D	27.8	1040
45D	40.1	1369
60D	48.9	1567

No.	Drawing	Description	Qty	Material	Notes
4	ETC-ASSY-EASR	ETC Short Roof Rails	4		
3	ETC-ASSY-EAXB	ETC X-Braces	1		
2	ETC-ASSY-EARL	ETC Rear Legs	2		
1	ETC-ASSY-001	ETC Solar Collector	1		

Apricus SOLAR HOT WATER	Designed by Qin Xian	Checked by	Approved by Mick H	Date	Creation Date 2016-03-08
	Project ETC Solar Collector		Title ETC-20/30T EASR Angle ASSY		
	Apricus Solar Co., Ltd		Part No.	Edition 1.0	Sheet 1/1