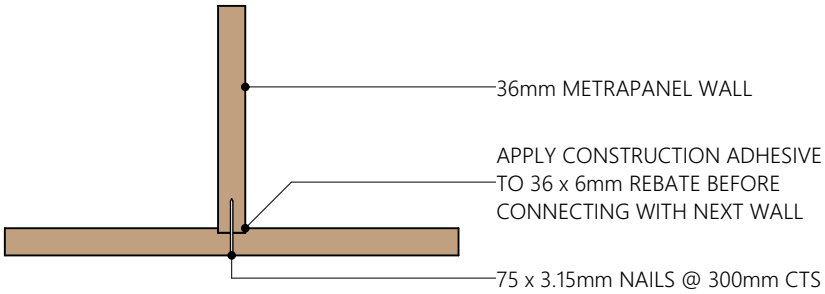

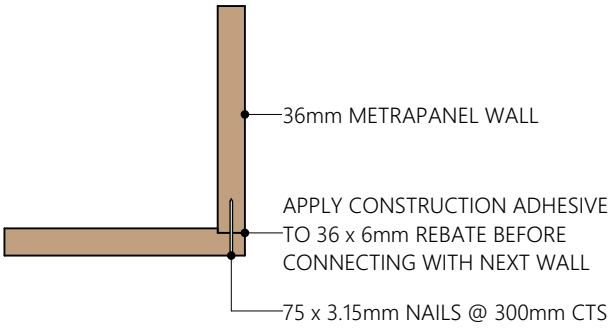

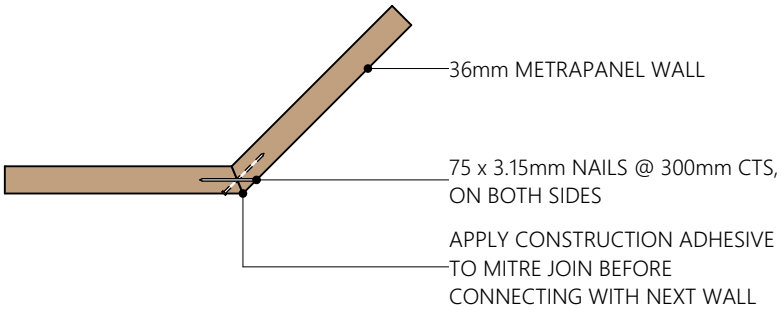

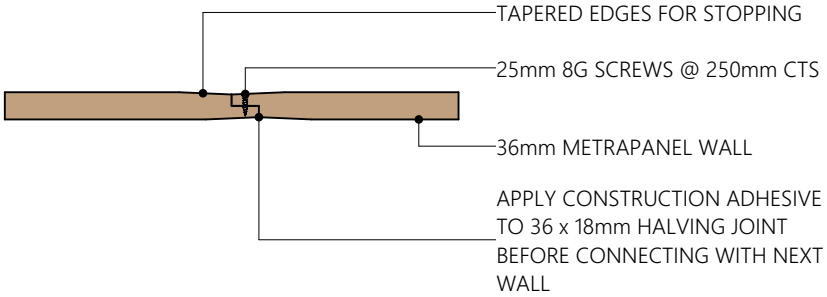

METRA® CONSTRUCTION PANELS

METRA PANEL WALL INTERNAL WALL CONNECTIONS

WWW.METRAPANEL.CO.NZ

PH: 07 828 2071

SCALE 1:10

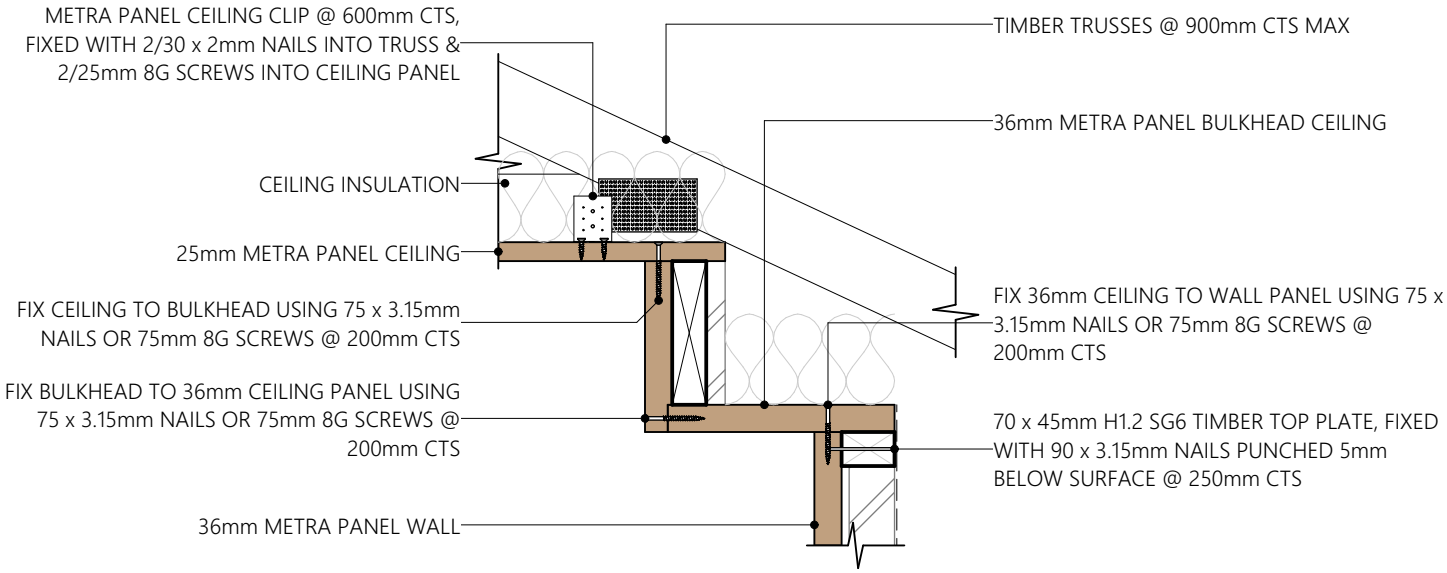

METRA CONSTRUCTION PANELS

METRA PANEL WALL BULKHEAD DETAIL

WWW.METRAPANEL.CO.NZ

PH: 07 828 2071

SCALE 1:10