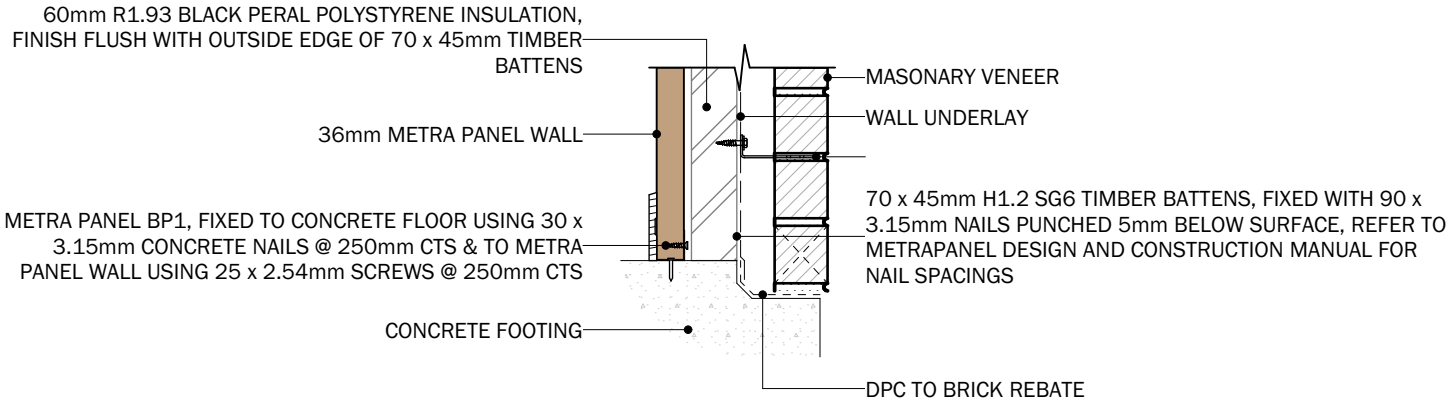

METRA CONSTRUCTION PANELS

METRA PANEL WALL BRICK FOUNDATION DETAIL

WWW.METRAPANEL.CO.NZ

PH: 07 828 2071

SCALE 1:10

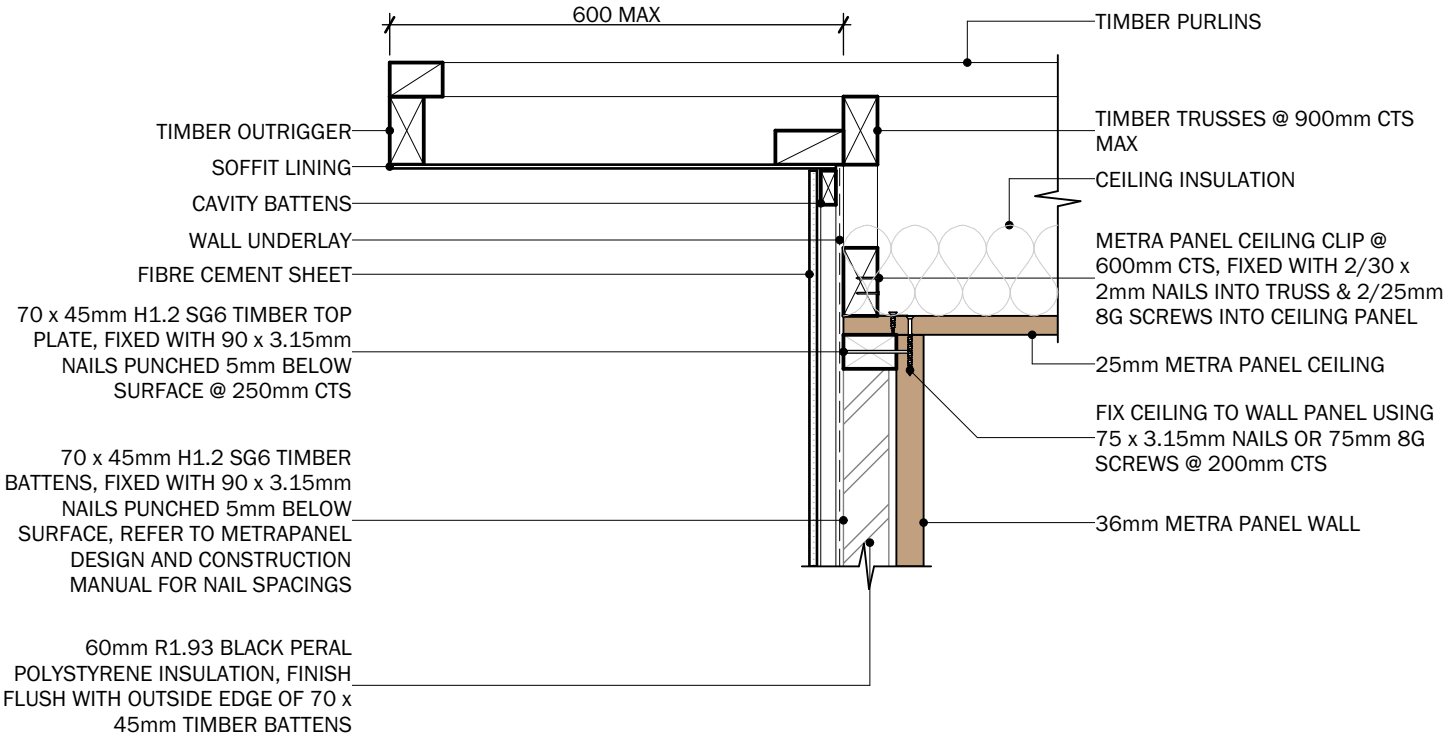

METRA CONSTRUCTION PANELS

METRA PANEL WALL FIBRE CEMENT SHEET BARGE DETAIL

WWW.METRAPANEL.CO.NZ

PH: 07 828 2071

SCALE 1:10

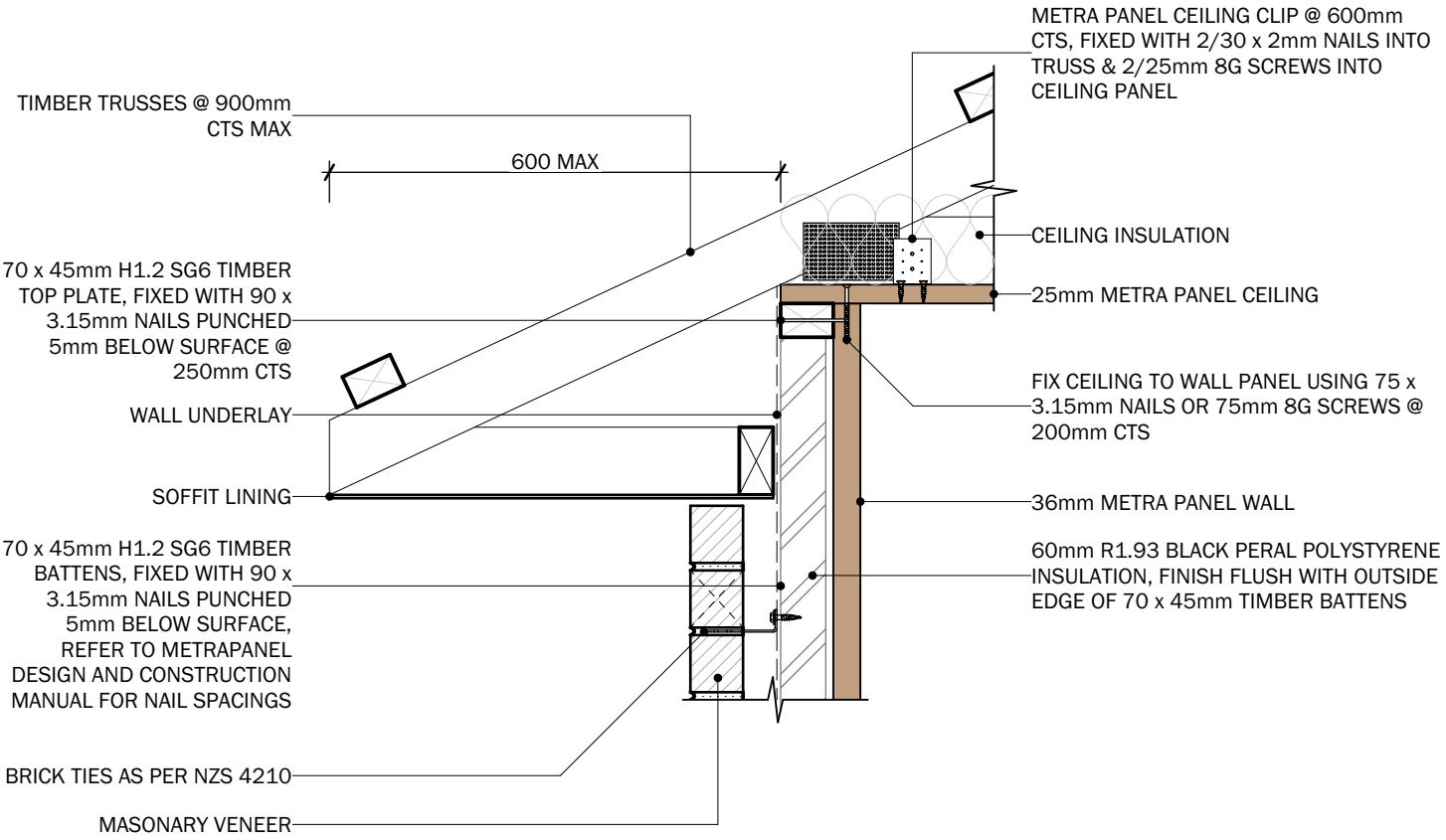

METRA CONSTRUCTION PANELS

METRA PANEL WALL BRICK FLAT SOFFIT

WWW.METRAPANEL.CO.NZ

PH: 07 828 2071

SCALE 1:10

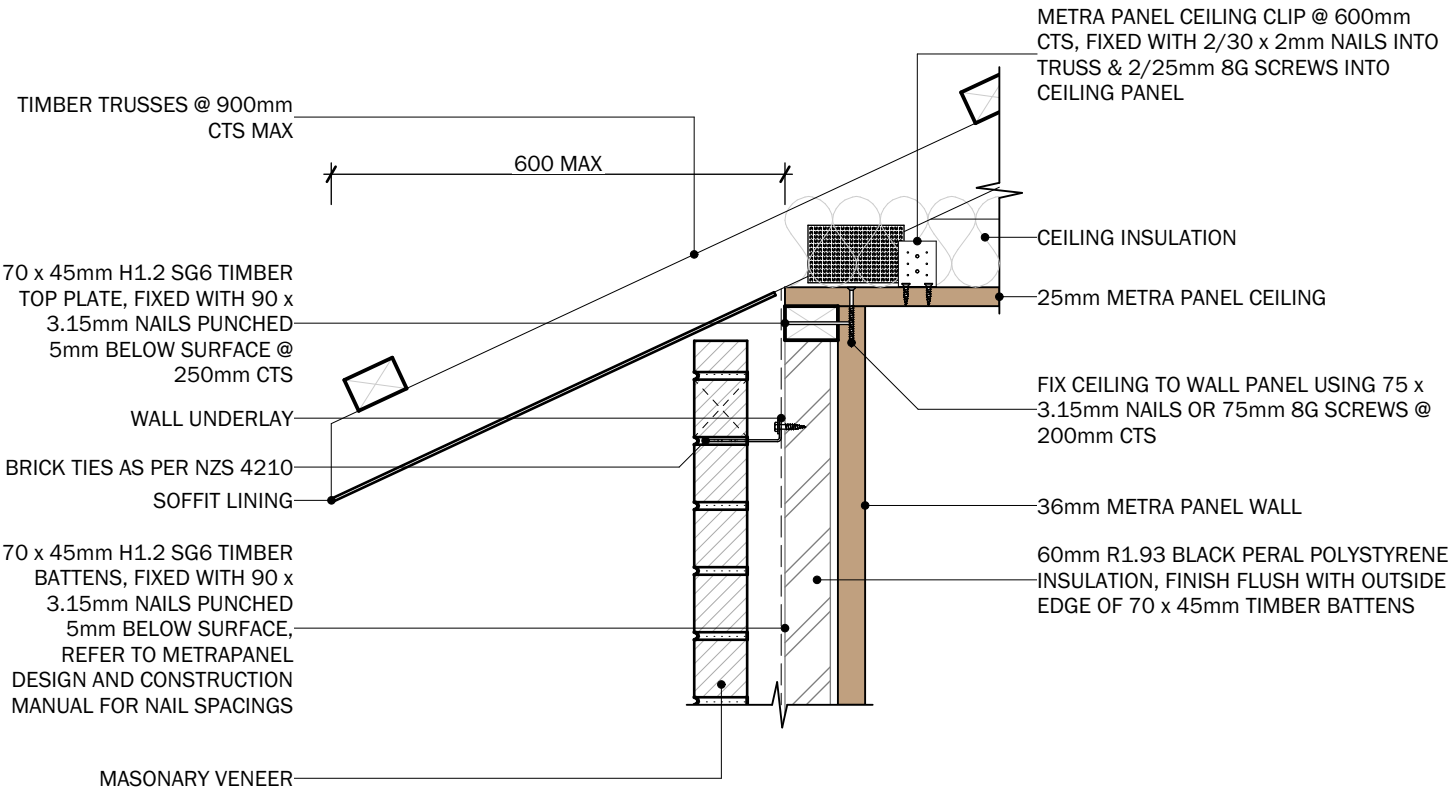

METRA CONSTRUCTION PANELS

METRA PANEL WALL BRICK
RAKING SOFFIT

WWW.METRAPANEL.CO.NZ

PH: 07 828 2071

SCALE 1:10

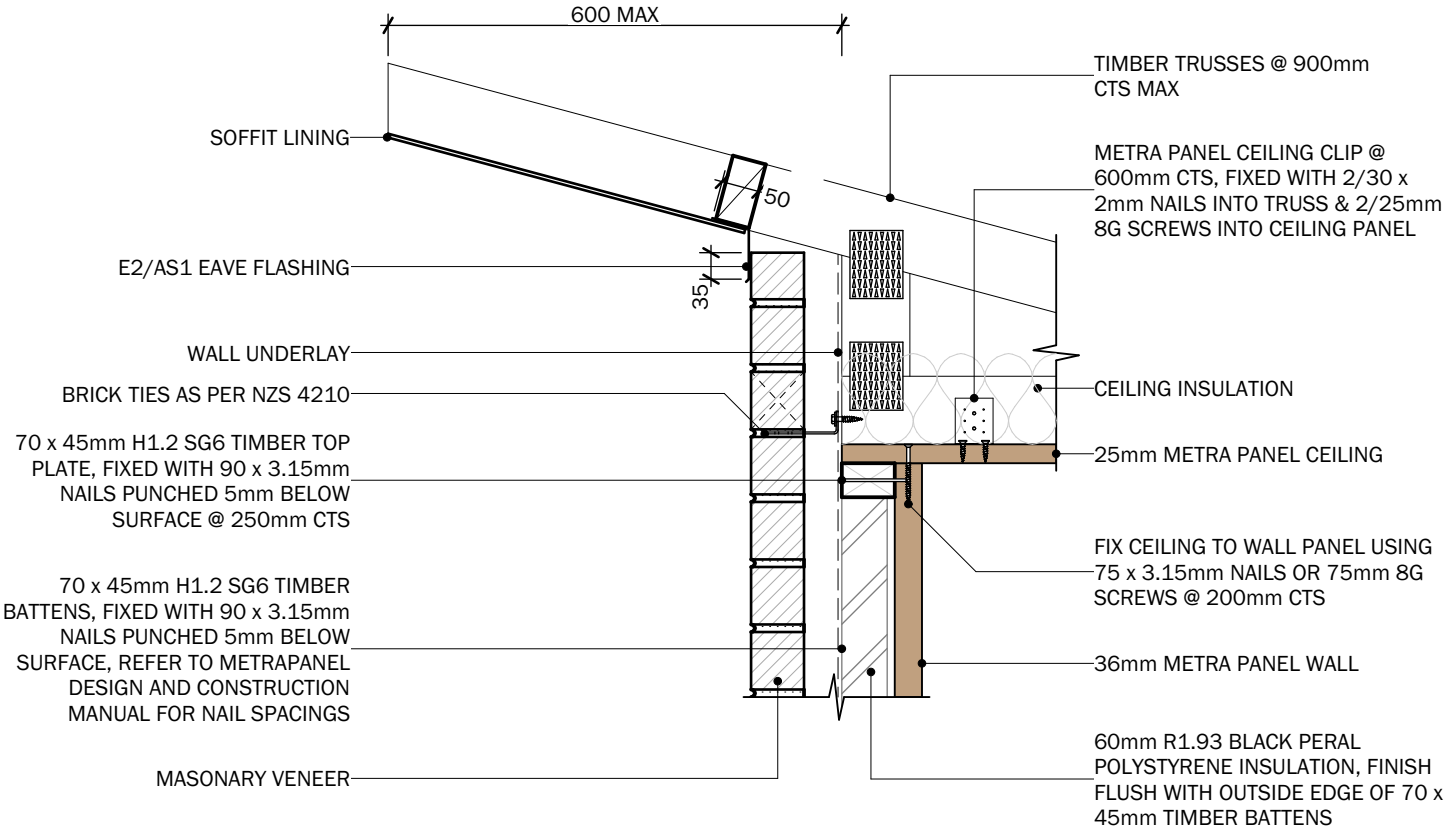

METRA CONSTRUCTION PANELS

METRA PANEL WALL BRICK
RAKING SOFFIT APEX

WWW.METRAPANEL.CO.NZ

PH: 07 828 2071

SCALE 1:10

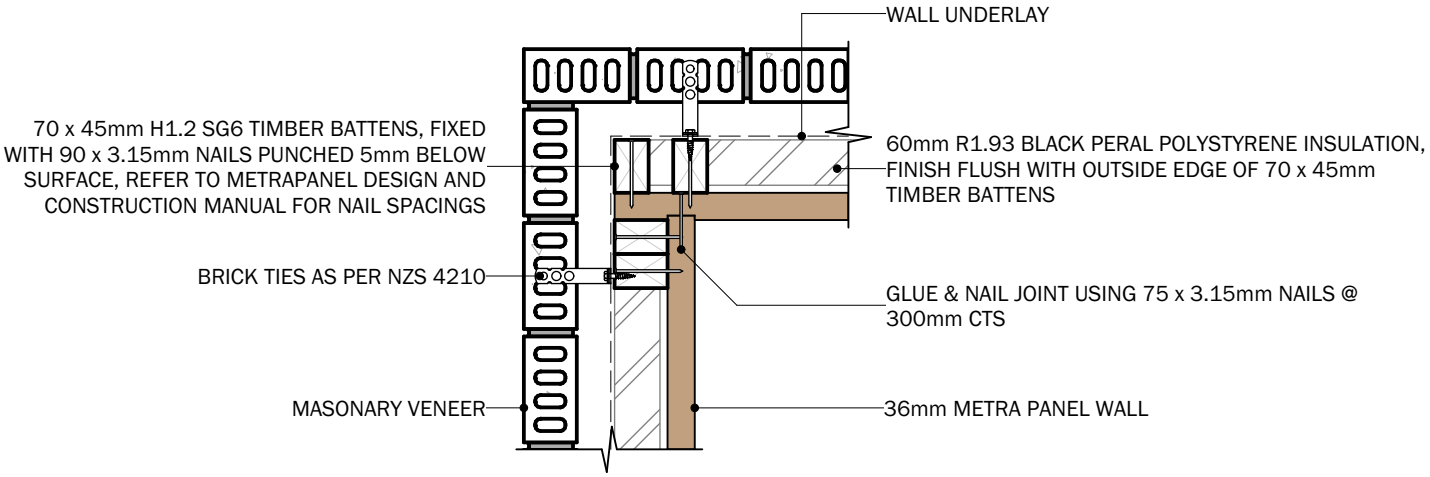

METRA CONSTRUCTION PANELS

METRA PANEL WALL BRICK
EXTERNAL CORNER

WWW.METRAPANEL.CO.NZ

PH: 07 828 2071

SCALE 1:10

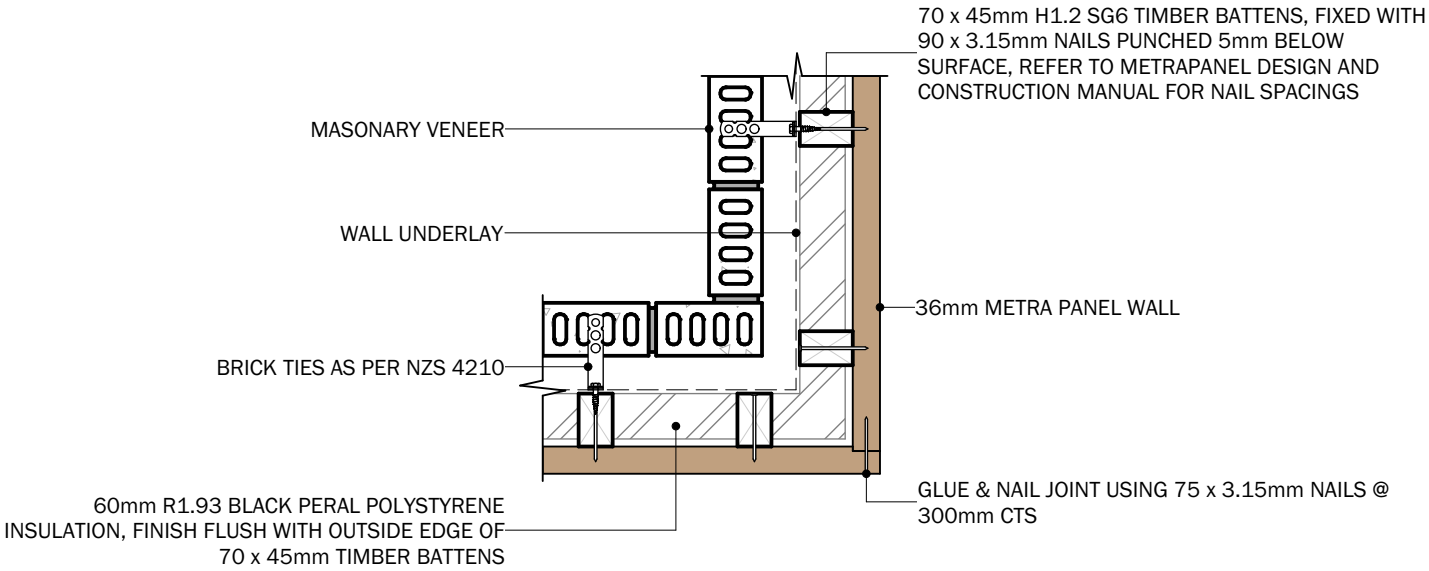

METRA CONSTRUCTION PANELS

METRA PANEL WALL BRICK
INTERNAL CORNER

WWW.METRAPANEL.CO.NZ

PH: 07 828 2071

SCALE 1:10

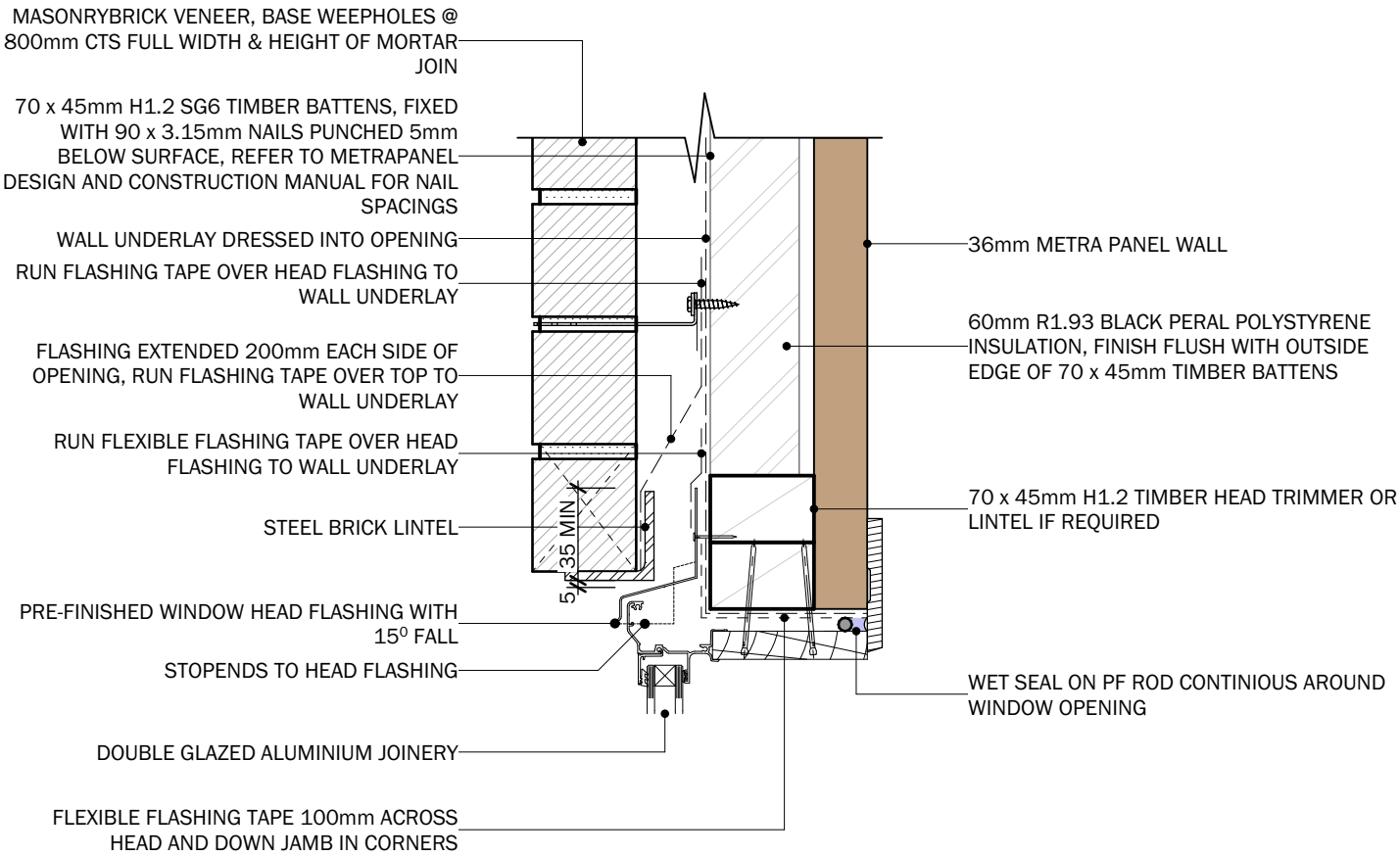

METRA CONSTRUCTION PANELS

METRA PANEL WINDOW HEAD MASONARY BRICK VENEER DETAIL

WWW.METRAPANEL.CO.NZ

PH: 07 828 2071

SCALE 1:5

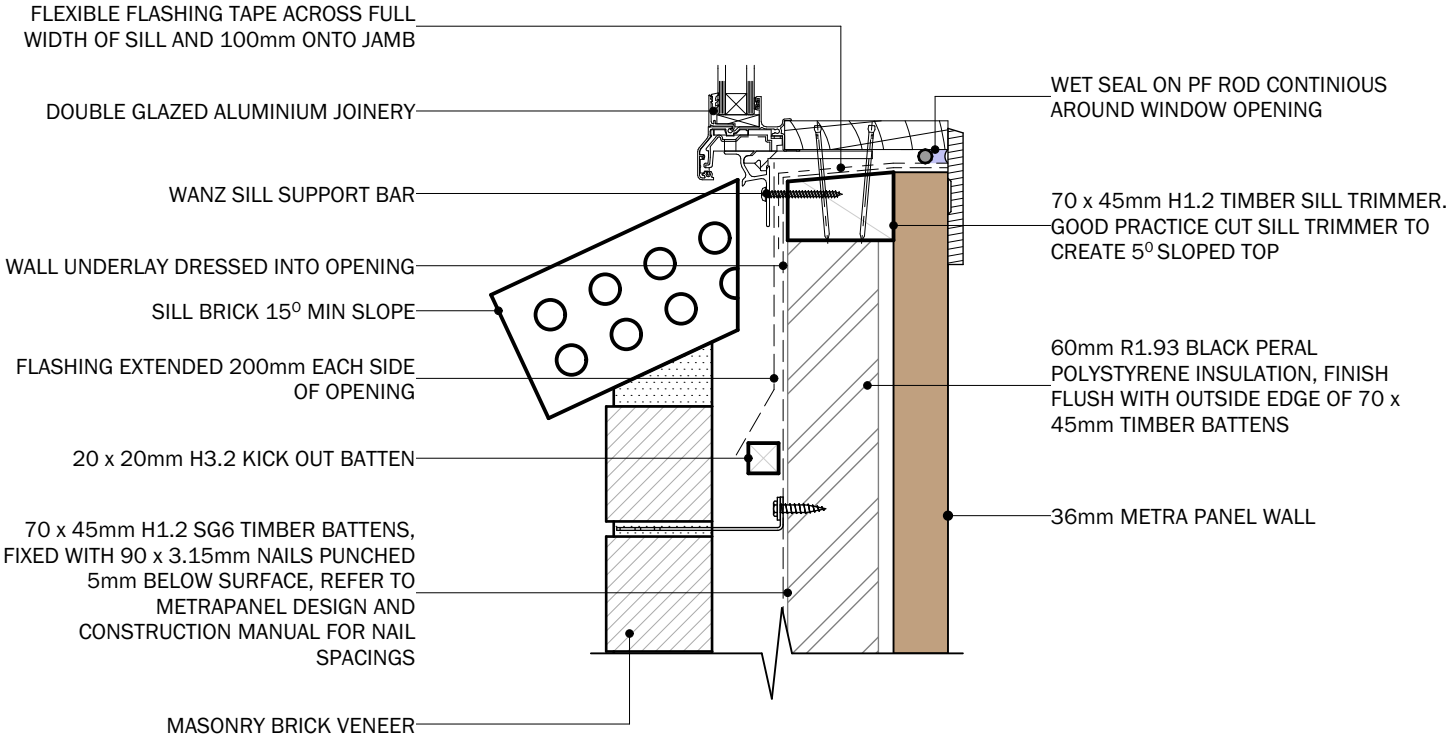

METRA CONSTRUCTION PANELS

METRA PANEL WINDOW SILL
MASONARY BRICK VENEER
DETAIL

WWW.METRAPANEL.CO.NZ

PH: 07 828 2071

SCALE 1:5

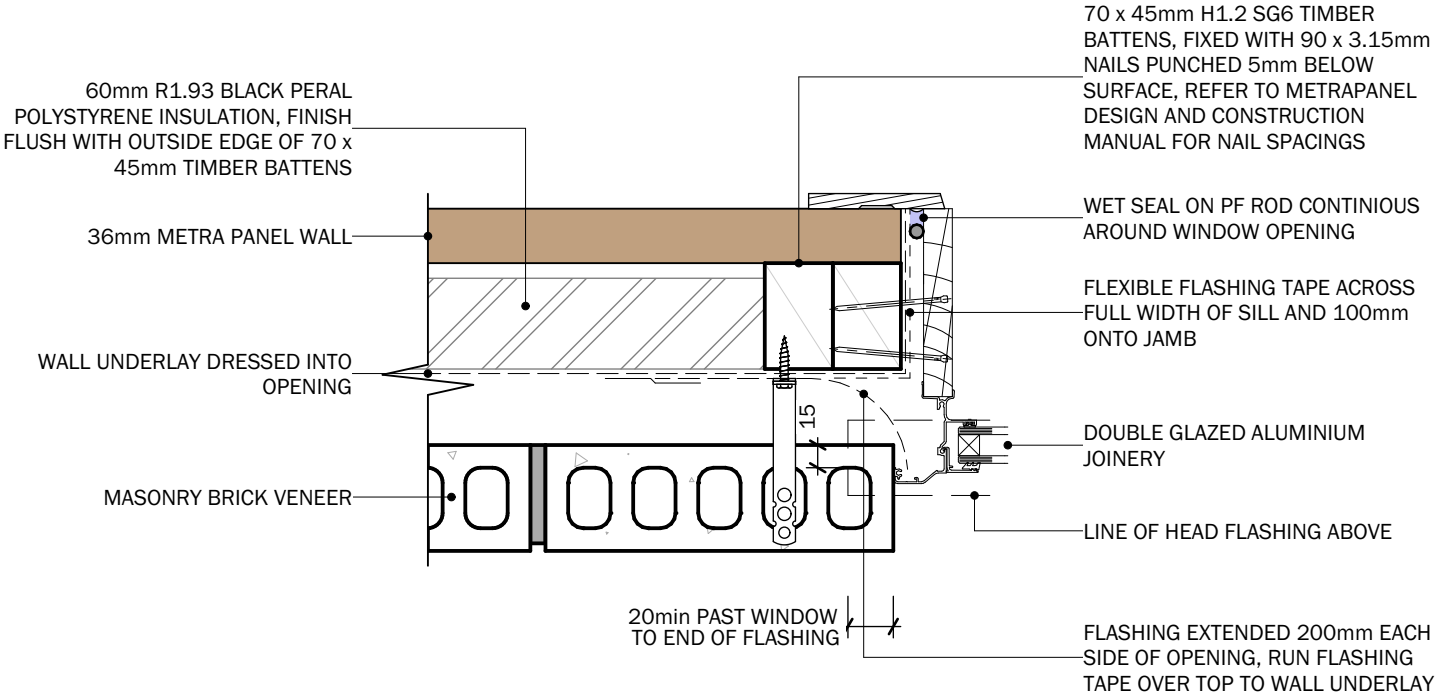

METRA CONSTRUCTION PANELS

METRA PANEL WINDOW JAMB
MASONARY BRICK VENEER
DETAIL

WWW.METRAPANEL.CO.NZ

PH: 07 828 2071

SCALE 1:5