22/10/2026

Data Sheet

Pacific AD500 Acoustic Door Set STC/Rw 50

Description

The AD400 is a high-end acoustic doorset, hinged flush panel door that is suitable for interior use. Available as a single door or as a pair of doors, acoustic tested and designed to reduce sound transmission within buildings.

The AD500 is a high-end acoustic doorset. In order to provide the very high acoustic rating it is much thicker and heavier than a regular door and has tight fitting acoustic seals. This means that it can be hard to open and close, especially if installed in a small air-tight room.

The AD500 is not suitable as a partition in high traffic areas or on access routes. People with disabilities may find it hard to operate.

For further information on this product, visit:

https://www.pacificdoors.co.nz/products/acoustic/acoustic-doors/ad-500

Product features:

Product features:

- STC 50 acoustic rating
- Single or pair
- Optional vision panel
- 9 frame options
- Suitable for interior use only
- Compatible with timber stud, steel stud and masonry wall
- Certified acoustic performance to ISO 140-3

Public

Product options

The thickness of the AD500 door leaf is 68mm with an approximate leaf weight of 75kg/m2.

Wall Type	Bottom Seals	Acoustic Rating	Door Application	Max Leaf Height (mm)	Max Leaf Width (mm)
Suitable Acoustic Rated Wall	Threshold Plate + Drop Seal	50	Single	2400	1200
		49	Pair		
	Double Drop Seal	48	Single	2400	1200
		48	Pair		

Notes:

1. Please note that the maximum leaf width shown above is measured per door leaf.

Wall Types
The AD500 door set is suitable for installation in timber stud, steel stud and masonry walls of a suitable acoustic construction. If a lightweight wall construction is used, special design of the wall opening may be required to ensure it will support the weight of the AD500 doorset.

The standard installation method for plasterboard walls is by 12g screws at max. 450 mm centres.

The standard for Masonry installation is M8 Excalibur screwbolts (or similar) at max. 450 mm centres. No fasteners are exposed to weather or attack face.

Door sets must be installed carefully with particular attention to the sealing of gaps, including around the frame to wall junction.

Leaf Facings
The facings listed below are available for the AD500 door set

- Steel, either galvanised or electrogalvanised
- MDF
- Decorative facings (timber veneer, formica etc) on MDF

Notes:

1. Other facings may be available, please contact Pacific Doors to discuss further options.
2. The AD500 can be powder coated, but may have visible undulations in the door face.

Leaf Edges
All doors have a 1.2 mm steel capping folded around all edges of the door leaf.

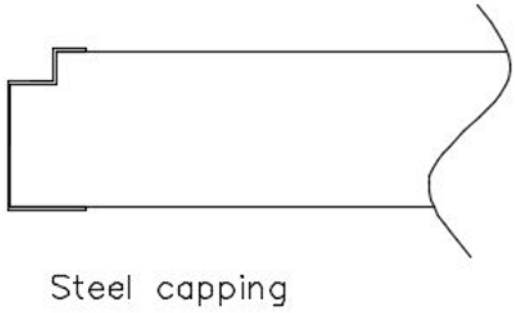

Public

Meeting Stiles
The meeting stiles listed below are applicable to pair door sets only.

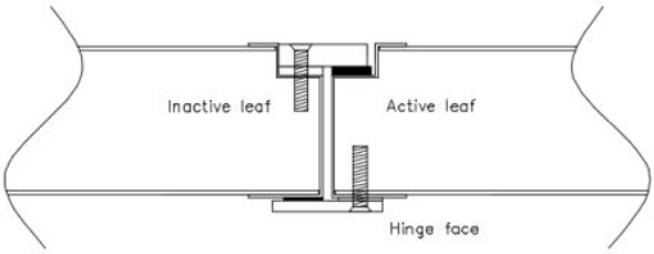

Hardware and seals

Hardware
The AD500 requires suitable latching in order for the frame seals to fully seal the gap between door leaf and frame. Mechanical latching hardware is essential for the performance of this door, push/pull hardware is not an option.

Extended backset locks (70mm or more) should be used if at all possible. There is a high probability of interference between hardware and frame stop on the push side if standard backset locks are used. Proposed hardware must be advised to Pacific Door Systems Ltd to assess the suitability, before manufacture.

Due to the weight of this door we recommend using the ASSA ABLOY DC700 G-CM heavy duty closer.

Due to the high acoustic nature of this door set, a door closer will pull the door into the closed position, however the door may require additional manual force for latching and full acoustic performance. Installation into small rooms with poor air flow can make the door difficult to open and close.

If a power transfer device is fitted to the door, the door leaf will not be able to open past 110 degrees.

Concealed hinges are not an option on this doorset. The doorset is only available with a full height Pemko _FS_ Full Surface Aluminium Hinge.

Any penetrations through the leaf should be packed with acoustic materials (e.g. batts) wherever possible.

Recommended latching points are shown in the below diagram. Pair doorsets require a designated inactive leaf which is secured top and bottom.



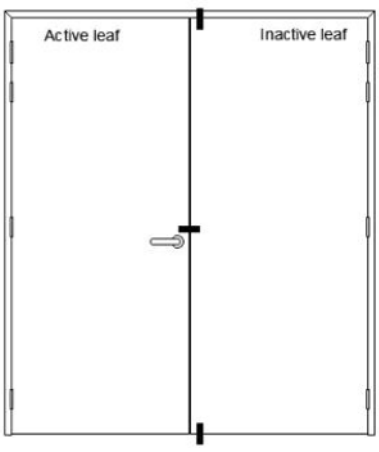

Public

Seals

Frame seals
The perimeter frame seals are self-adhesive seals mounted in the frame rebate, so are hidden when the door is closed.

Bottom seals
There are two options for the bottom seals:

Threshold Plate + Drop Seal

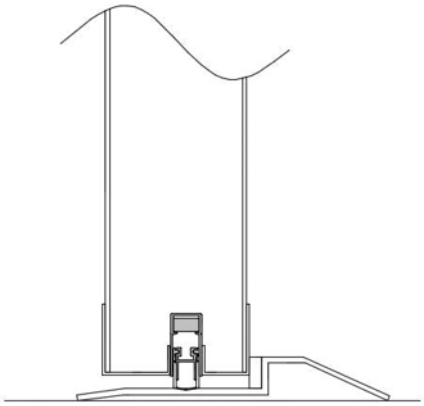

A steel threshold plate with a 20 mm step to hold one line of self-adhesive foam seal (identical to perimeter seals) is fitted to the floor. In addition to this there is one drop seal rebated into the bottom edge of the door. The height of the gap between the finished floor level and the bottom of the door must be set up carefully during installation of the door set so that the door will engage with the threshold seal as intended. For optimum performance the threshold plate should be sealed to the floor.

Compression Seal (Type B)

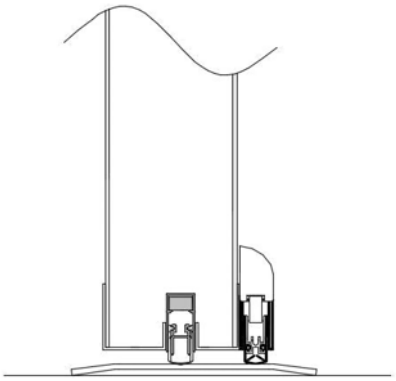

Two drop seals are fitted to the door leaf; one rebated into the bottom edge and one face mounted along the bottom of the blank face. The seals need to engage on a flat, hard surface e.g. a smooth concrete floor or a flat steel threshold plate as shown in drawing below. If a threshold plate is used it should be sealed to the floor.

Public

Frame types and profiles

Timber Frame
The timber frame profiles listed below are available for the AD500 door set.

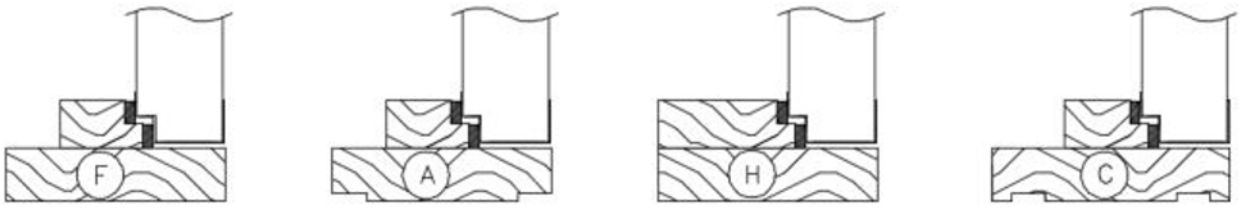

Steel Frame
The steel frame profiles listed below are available for the AD500 door set.

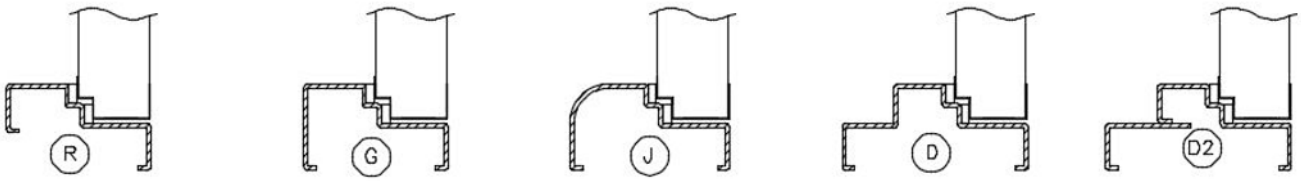

The frame is made from 2 mm folded EGZ or galvanised steel. The steel frames require packing of the frame during installation with fibrous insulation material (e.g. fibreglass, mineral wool or polyester batts).

For more in depth information on frame profiles, please see our Installation Instructions.

Vision panel

Glazing Type	Maximum Glazed Area	Max Height (mm)	Max Width (mm)	Glazing Bead		STC/Rw Rating
					Steel	
Acoustic IGU	0.386m2	900	621			50

Notes:

1. Please note that the height and width of the vision panel must still fall within the maximum glazed area.
2. Ratings apply to a single vision panel per leaf.
3. Maximum glazed area is measured per door leaf.
4. Vision panel size and location is dependent on hardware selection.

Public

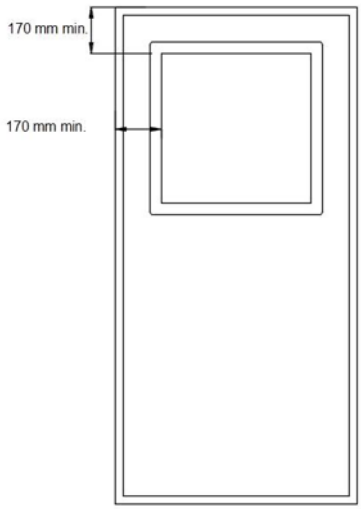

Performance

Smoke control
AD-series acoustic doors are available with a smoke control rating (-/-/-/ SM). These doors comply with the NZBC C/AS2 C6.1.2 definition of smoke control doors.

Thermal insulation
This door leaf has a thermal insulation rating (R-value) of 1.444 Km2/W.

Public

Acoustal performance graphs

Size of test opening:	2.20	m²
Mass per unit area:	75	kg/m²
Temperature:	11.0	°C
Air humidity:	67	%
Source room volume:	62.3	m³
Receiving room volume:	56.0	m³

Frequency f [Hz]	R 1/3 octave [dB]
50	
63	
80	29.5
100	30.8
125	30.4
160	39.3
200	38.7
250	46.7
315	47.8
400	47.5
500	49.2
630	49.5
800	50.6
1,000	52.0
1,250	51.8
1,600	51.1
2,000	53.0
2,500	51.8
3,150	52.8
4,000	55.2
5,000	58.2

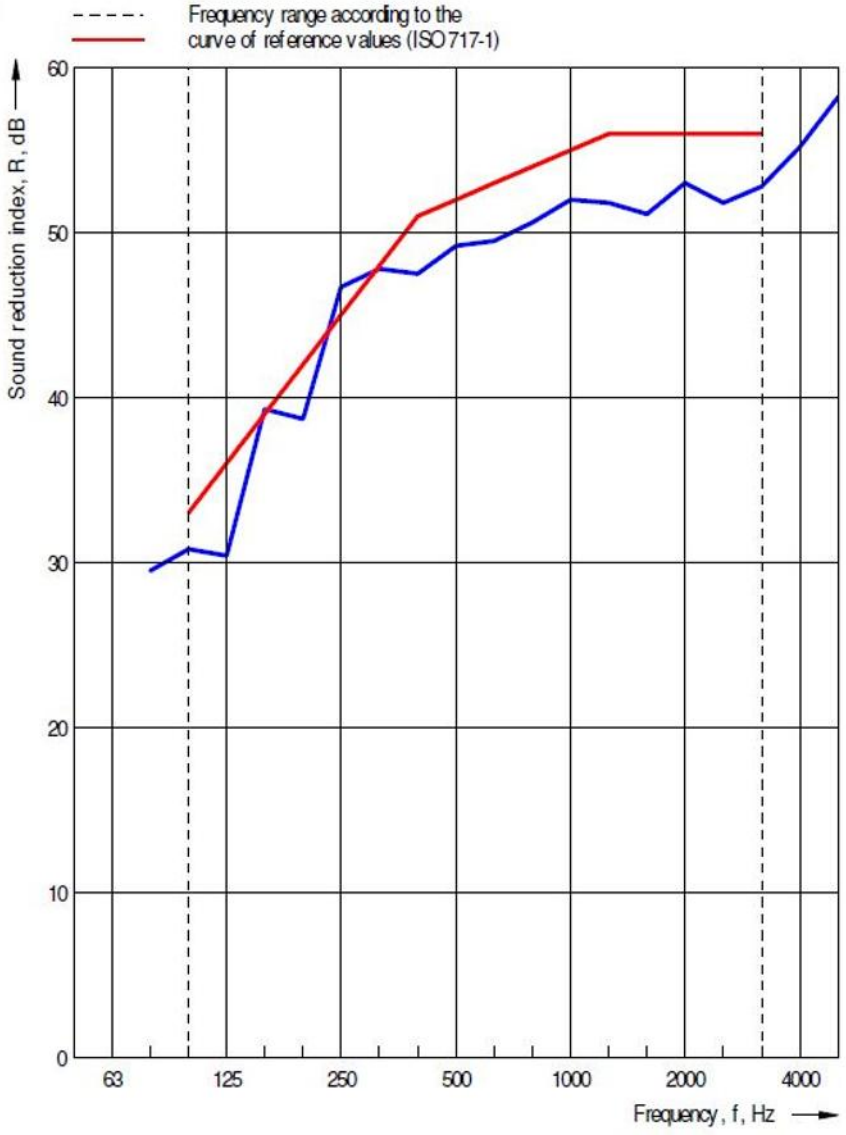

Rating according to ISO 717-1

$R_w(C;C_{tr})$ = 50 (-1;-5) dB

Evaluation based on laboratory measurement results obtained in one-third-octave bands by an engineering method.

$C_{50\text{-}3150}$ = dB $C_{50\text{-}5000}$ = dB $C_{100\text{-}5000}$ = 0 dB

$C_{tr,50\text{-}3150}$ = dB $C_{tr,50\text{-}5000}$ = dB $C_{tr,100\text{-}5000}$ = -5 dB

Public