21/10/2026

Data Sheet

Pacific AD200-I Acoustic Door Set STC/Rw 38

Description

The AD200-I is a hinged flush panel door, available as a single door or as a pair of doors, acoustic tested and designed to reduce sound transmission within buildings.

For further information on this product, visit:
https://www.pacificdoors.co.nz/products/acoustic/acoustic-doors/ad-200-i

Product features:

Product features:

- STC 38 acoustic rating
- Single or pair
- 5 leaf facing options
- 9 frame options
- 2 glass options
- Suitable for interior use only
- Compatible with timber stud, steel stud and masonry wall
- Certified acoustic performance to ISO 140-3

An exterior version of the AD200-I is also available – refer to the AD200-E.

Product options

The thickness of the AD200 door leaf is 47mm with an approximate leaf weight of 24kg/m2.

Wall Type	Acoustic Rating	Door Application	Max Leaf Height (mm)	Max Leaf Width (mm)
Steel Stud Wall Timber Stud Wall Masonry Wall	STC/Rw 38	Single	2700	1200
		Pair	2700	1200

Public

Notes:

1. Please note that the maximum leaf width shown above is measured per door leaf.

Wall Types
Door sets must be installed carefully, with particular attention to sealing gaps, including around the frame-to-wall junction.

Leaf Facings
The facings listed below are available for the AD200 door set

- MDF
- Timber Veneer
- HPL decorative laminate (e.g. Formica)
- Sheet Vinyl
- Metal Sheet, Galv or stainless (0.9mm)*

Notes:

1. Of the above facings only those marked * may extend around the door edge.
2. Other facings may be available, please contact Pacific Doors to discuss further options.

Leaf Edges
Paint quality doors have unclashed edges.

Timber veneer faced doors are clashed on the vertical edges with solid timber.

Doors faced with decorative laminate or vinyl (e.g. Hospital doors) are capped on the vertical edges with an aluminium extrusion capping with natural anodised finish.

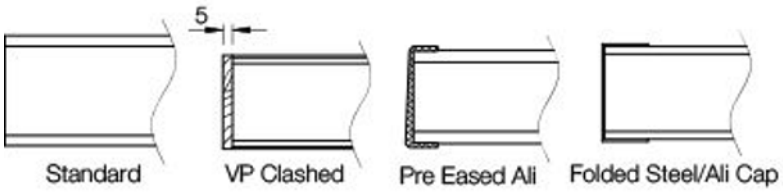

Meeting Stiles
The meeting stiles listed below are applicable to paired door sets only.

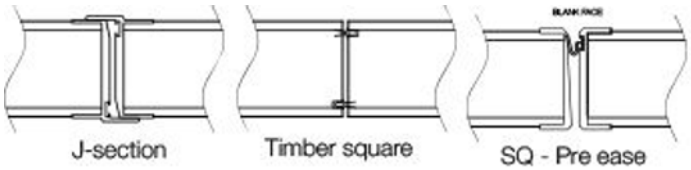

Public

Hardware and seals

Hardware
The AD200 requires suitable latching in order for the frame seals to fully seal the gap between door leaf and frame.

Practically any standard door hardware can be used on the AD200, however the proposed hardware must be advised to Pacific Door Systems Ltd to assess the suitability, before manufacture.

Any penetrations through the leaf should be packed with acoustic materials (e.g. batts) wherever possible.

Concealed hinges are not an option on this doorset.

Recommended latching points are shown in the below diagram. Pair doorsets require a designated inactive leaf which is secured top and bottom.

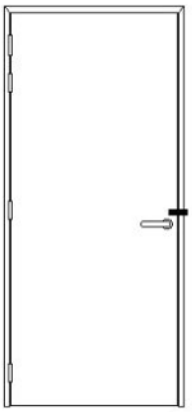

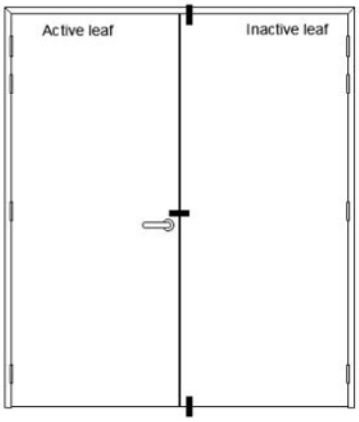

Concealed hinges are not an option on this doorset.

Recommended latching points are shown in the below diagram. Pair doorsets require a designated inactive leaf which is secured top and bottom.

Seals
The perimeter frame seals are self-adhesive seals mounted in the frame rebate, so are hidden when the door is closed.

The bottom seal (Type L) is an automatic door seal that lifts clear of the floor when the door is opened. The seal is fully mortised in a groove in the bottom edge of the door.

The bottom seal must close onto a smooth, flat and level surface to seal as intended.

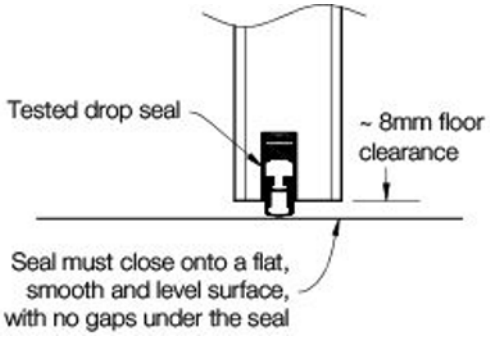

Public

Frame types and profiles

Timber Frame
The timber frame profiles listed below are available for the AD200 door set.

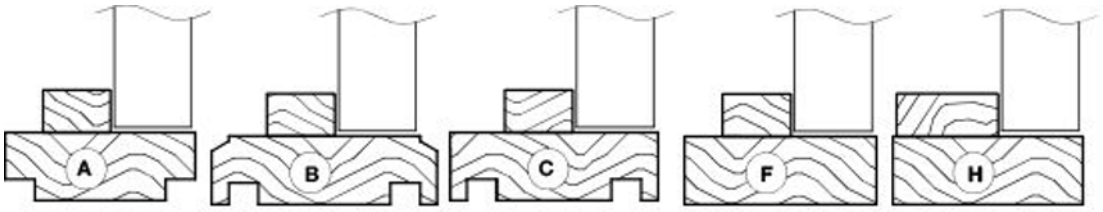

Steel Frame
The steel frame profiles listed below are available for the AD200 door set

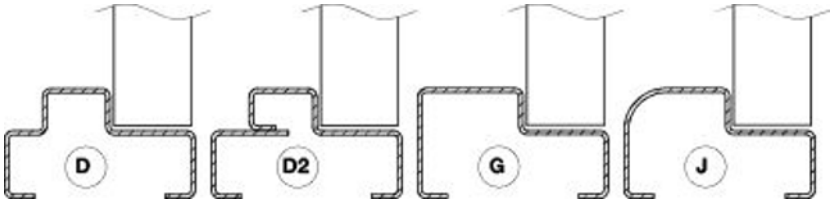

Steel frames require packing of the frame during installation with fibrous insulation material (e.g. fibreglass, mineral wool or polyester batts).

Standard frames are three-sided only with no sill. Four-sided frames and/or custom sills may be available on request. For more in-depth information on frame profiles and sizes, please see our Installation Instructions.

Vision panel

Glazing Type	Maximum Glazed Area	Max Height (mm)	Max Width (mm)	Glazing Bead		STC/Rw Rating
				Timber	Aluminium	
10.38 Clear Lam	0.16m2	1000	860	√	√	37
6.76 PVB laminate	0.45m2	1000	860	√	√	36

Public

Notes:

1. Please note that the height and width of the vision panel must still fall within the maximum glazed area.
2. Ratings apply to a single vision panel per leaf.
3. Maximum glazed area is measured per door leaf

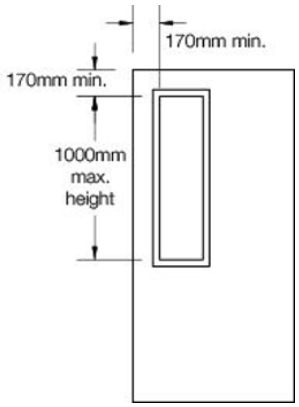

Circular Vision Panels

Size allowance:

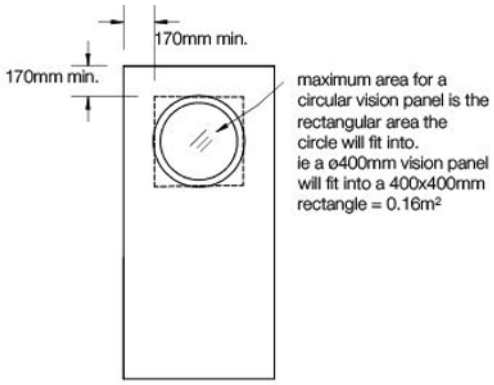

Standard Cross Section:

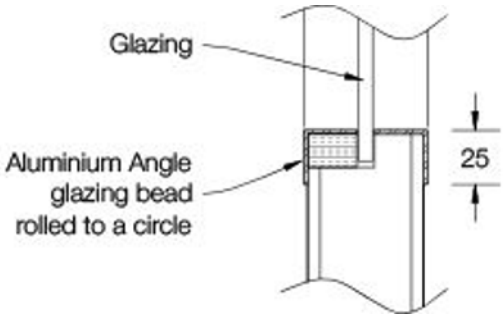

Standard Vision Panel Cross Sections

Timber Bead:

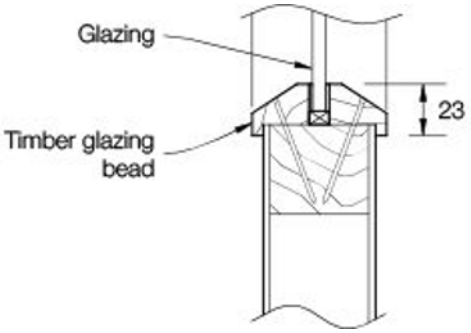

Aluminium Bead:

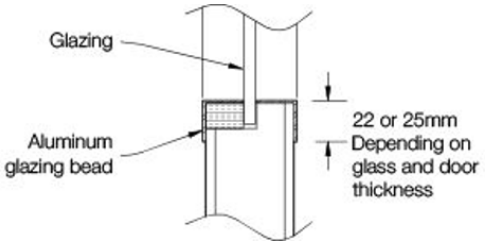

Public

Performance

Smoke control
AD-series acoustic doors are available with a smoke control rating (-/-/-/ SM). These doors comply with the NZBC C/AS2 C6.1.2 definition of smoke control doors.

Thermal insulation
This door leaf has a thermal insulation rating (R-value) of 0.7751 Km2/W.

Acoustal performance graphs

Size of test opening:	1.92	m²
Mass per unit area:	20.4	kg/m²
Temperature:	15.0	°C
Air humidity:	72	%
Source room volume:	62.3	m³
Receiving room volume:	56.0	m³

Frequency f [Hz]	R 1/3 octave [dB]
50	14.9
63	16.4
80	16.9
100	24.1
125	20.4
160	28.7
200	24.1
250	25.4
315	31.0
400	35.3
500	38.7
630	37.5
800	39.0
1,000	39.5
1,250	42.2
1,600	42.2
2,000	40.8
2,500	39.6
3,150	41.9
4,000	40.6
5,000	41.4



© 2014 Pacific Door Systems

Rating according to ISO 717-1

$R_w(C;C_{tr}) = 38\,(-1;-5)$ dB

Evaluation based on laboratory measurement results obtained in one-third-octave bands by an engineering method.

$C_{50\text{-}3150} = -2$ dB $\quad C_{tr,50\text{-}3150} = -7$ dB

$C_{50\text{-}5000} = -1$ dB $\quad C_{tr,50\text{-}5000} = -7$ dB

$C_{100\text{-}5000} = -1$ dB $\quad C_{tr,100\text{-}5000} = -5$ dB

Public