30/09/2026

Data Sheet

Pacific TB60 Economy Fire Door

Description

The TB60 fire door set is ideal for interior use and comes with a timber frame. It is the most economical option among our product lines, yet it does not compromise on quality or fire safety standards.

Product features:

- 60min fire rating
- Single or pair
- 4 facing options
- 3 frame options
- 2 glass options
- Compatible with timber stud, steel stud, and masonry walls
- Ventilation grilles available
- Meets NZS4520.2010 standard

For further information on this product, visit:

https://www.pacificdoors.co.nz/products/fire/fire-doors/frr-60-minute/tb60

Product options

Leaf Size and Wall Type

Timber-framed smoke control doors include a seal in the frame. If required, bottom seals can be selected from the Hardware list.

The thickness of the TB60 door leaf is 55mm with an approximate leaf weight of 35.2kg/m2.

Wall Type	Jamb Type	Fire Resistance Rating	Wall Type	Jamb Type	Fire Resistance Rating
Timber Stud Wall Steel Stud Wall Masonry Wall	Timber	-/60/60sm	Single	2400	1200
			Pair	2200	938 ***(1),(2)**

Public

Notes:

1. Minimum width for pair doorset is 380mm.
2. For pair door, any leaf larger than 592mm must be fitted with thermal bolt.
3. The ‘sm’ above denotes that the door is available as a smoke control door set.

Wall Types
The TB60 can be installed in masonry walls and timber stud and steel stud drywalls of at least 60 minute fire resistance. Timber studs should be minimum 90 x 45 mm. Steel stud walls should be min. 92 mm with BMT of at least 0.75 mm and reinforced with timber stud around the door opening.

If installed in a 30-minute fire wall, the fire resistance of the doorset will be limited to 30 minutes.

Door Leaf Options

Leaf Facings
- MDF
- Ply
- Timber veneers
- High pressure laminate up to 1.5mm thick (e.g. Laminex, Formica)

Notes: Other facings may be available, please contact Pacific Doors to discuss further options.

Leaf Edge
The leaf edges listed below are available for the TB60 door set

- 7 mm hardwood clashing to leading edge (Singles)
- 18 mm hardwood clashing to lead edge (Rebated pairs)

Meeting Stiles
*Rebated and flush

Frame Types & Profiles

Timber Frame
The timber frame profiles listed below are available for the TB60 door set.

Timber density requirements exclude some species of timber. Timber must be a hardwood with minimum density of 600kg/m3.

LVL frames can be used with a reduction in fire rating to -/30/30.

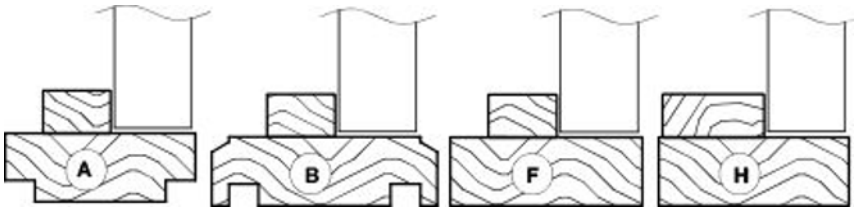

Public

Steel Frame
This door set is only available in a timber frame.

Standard frames are three-sided only with no sill. Timber sills are not available on fire doorsets. For more in depth information on frame profiles and sizes, please see our Installation Instructions.

Vision Panel

Glazing Type	Maximum Glazed Area(mm)	Max Height (mm)	Max Width (mm)	Glazing Bead		FRR with Vision Panel
				Timber	Aluminum	Up to 0.065m2
Pyranova 60 S3.0 (Pyro 23mm)	0.66	1100	600	✔		-/60/60
Pyranova 30 S3.0 (Pyro 15mm)	0.33	815	400	✔		-/60/30

Notes:

1. Up to two vision panels allowed in a single leaf (only when using Pyro23 glass). Please refer to the details below for limitations around two vision panels.
2. Circular vision panels are not available.
3. The height and width of the vision panel/s must still fall within the maximum glazed area.
4. Vision panel only approved for 55mm Triboard.
5. The distance between the vision panel cutout and any item of hardware shall be at least 60 mm.

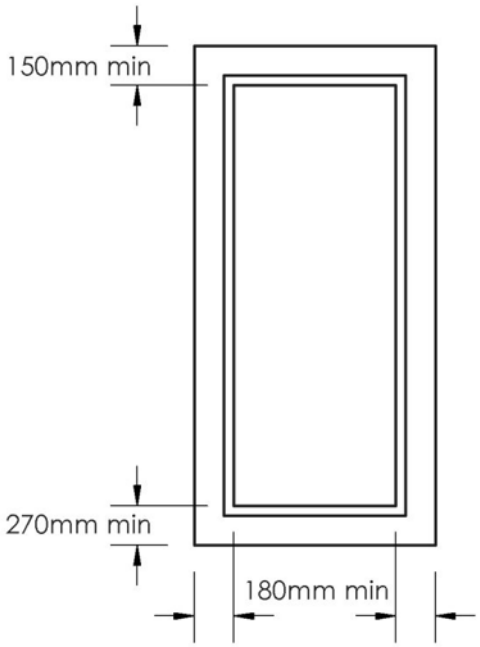

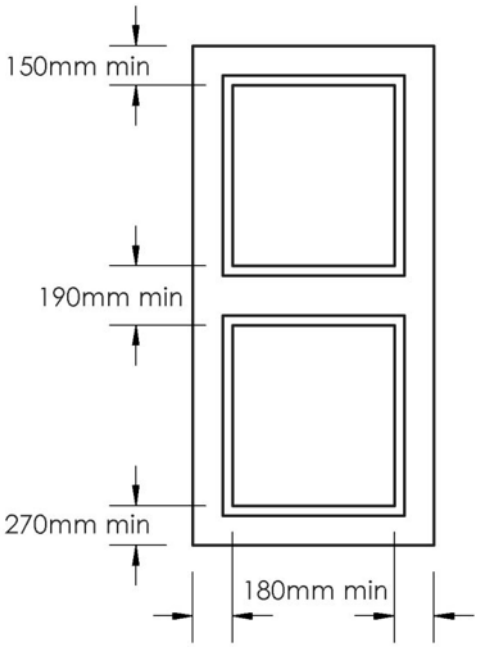

Public

Standard Vision Panel Cross Sections

Timber Bead	Aluminium Bead
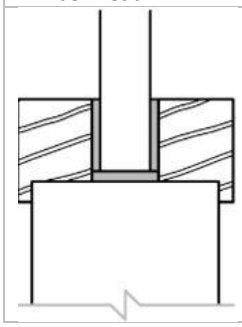	Not Applicable for this door set

Performance

Acoustical performance
An acoustic rating of STC 34 is available for this doorset.

Public