RESIDENTIAL TRIMRIB

RESIDENTIAL TRIMRIB® SHEET LIST

Detail Number: RI-RT00A

Date drawn: 07/07/2017

RESIDENTIAL TRIMRIB SHEET LIST

Sheet Number	Type	Sheet Name
TRIMRIB®		
RI-RT00A	RESIDENTIAL TRIMRIB	RESIDENTIAL TRIMRIB® SHEET LIST
RI-RT00B	RESIDENTIAL TRIMRIB	PROFILES & ACCESSORIES
RI-RT00C	RESIDENTIAL TRIMRIB	PROFILE SUMMARY - TRIMRIB
RI-RTR000A	RESIDENTIAL TRIMRIB® ROOFING	TYPICAL TRUSS ROOF
RI-RTR000B	RESIDENTIAL TRIMRIB® ROOFING	TYPICAL RAFTER / SLOPING CEILING ROOF
RI-RTR000C	RESIDENTIAL TRIMRIB® ROOFING	TYPICAL EXPOSED RAFTER ROOF
RI-RTR001A	RESIDENTIAL TRIMRIB® ROOFING	BARGE DETAIL (KICK OUT)
RI-RTR001B	RESIDENTIAL TRIMRIB® ROOFING	BARGE DETAIL (BIRDS BEAK)
RI-RTR002A	RESIDENTIAL TRIMRIB® ROOFING	HEAD BARGE DETAIL (KICK OUT)
RI-RTR002B	RESIDENTIAL TRIMRIB® ROOFING	HEAD BARGE DETAIL (BIRDS BEAK)
RI-RTR003A	RESIDENTIAL TRIMRIB® ROOFING	CHANGE IN PITCH
RI-RTR004A	RESIDENTIAL TRIMRIB® ROOFING	GUTTER APRON
RI-RTR005A	RESIDENTIAL TRIMRIB® ROOFING	RIDGE AND HIP FLASHING (ROLL TOP)
RI-RTR005B	RESIDENTIAL TRIMRIB® ROOFING	RIDGE AND HIP FLASHING (SQUARE TOP)
RI-RTR006A	RESIDENTIAL TRIMRIB® ROOFING	VALLEY DETAIL (E2/AS1 COMPLIANCE)
RI-RTR006B	RESIDENTIAL TRIMRIB® ROOFING	VALLEY DETAIL (NZ METAL ROOF & WALL CLADDING (CODE OF PRACTICE COMPLIANCE)
RI-RTR007A	RESIDENTIAL TRIMRIB® ROOFING	INTERNAL GUTTER
RI-RTR008A	RESIDENTIAL TRIMRIB® ROOFING	FIXINGS AND SHEET LAP
RI-RTR009A	RESIDENTIAL TRIMRIB® ROOFING	RIDGE - HIP FLASHING DETAIL
RI-RTR010A	RESIDENTIAL TRIMRIB® ROOFING	PARALLEL APRON FLASHING (NON CAVITY)
RI-RTR010B	RESIDENTIAL TRIMRIB® ROOFING	PARALLEL APRON FLASHING (CAVITY)
RI-RTR010C	RESIDENTIAL TRIMRIB® ROOFING	PARALLEL APRON FLASHING (HORIZ TRIMRIB ON CAVITY)
RI-RTR010D	RESIDENTIAL TRIMRIB® ROOFING	PARALLEL APRON 2 PIECE FLASHING (CAVITY)
RI-RTR011A	RESIDENTIAL TRIMRIB® ROOFING	APRON FLASHING (NON CAVITY)
RI-RTR011B	RESIDENTIAL TRIMRIB® ROOFING	APRON FLASHING (CAVITY)
RI-RTR011C	RESIDENTIAL TRIMRIB® ROOFING	APRON FLASHING (HORIZ TRIMRIB ON CAVITY)
RI-RTR011D	RESIDENTIAL TRIMRIB® ROOFING	APRON 2 PIECE FLASHING (CAVITY)
RI-RTR012A	RESIDENTIAL TRIMRIB® ROOFING	PARALLEL HIDDEN OR OBTUSE GUTTER (NON CAVITY)
RI-RTR012B	RESIDENTIAL TRIMRIB® ROOFING	PARALLEL HIDDEN OR OBTUSE GUTTER (CAVITY)
RI-RTR012C	RESIDENTIAL TRIMRIB® ROOFING	PARALLEL HIDDEN OR OBTUSE 2 PIECE GUTTER (CAVITY)
RI-RTR013A	RESIDENTIAL TRIMRIB® ROOFING	MANSARD / EXTERNAL CHANGE IN PITCH FLASHING
RI-RTR014A	RESIDENTIAL TRIMRIB® ROOFING	EPDM FLASHING FOR UP TO 85mm DIA PIPE
RI-RTR015A	RESIDENTIAL TRIMRIB® ROOFING	UNDER RIDGE / APRON SOAKER FLASHING FOR PIPE / CHIMNEY PENETRATION UP TO 500mm DIA.
RI-RTR015B	RESIDENTIAL TRIMRIB® ROOFING	SOAKER FLASHING FOR PIPE / CHIMNEY PENETRATION (85-500mm DIA, MID ROOF)
RI-RTR016A	RESIDENTIAL TRIMRIB® ROOFING	UNDER RIDGE / APRON CHIMNEY FLASHING
RI-RTR016B	RESIDENTIAL TRIMRIB® ROOFING	CHIMNEY FLASHING, MID ROOF
RI-RTR016C	RESIDENTIAL TRIMRIB® ROOFING	CHIMNEY FLASHING, MID ROOF
RI-RTR016D	RESIDENTIAL TRIMRIB® ROOFING	SKYLIGHT FLASHING
RI-RTR016E	RESIDENTIAL TRIMRIB® ROOFING	LEVEL SOAKER CURB FLASHING
RI-RTR025A	RESIDENTIAL TRIMRIB® ROOFING	RIDGE / BARGE JUNCTION
RI-RTR026A	RESIDENTIAL TRIMRIB® ROOFING	INTERNAL BARGE FLASHING
RI-RTR027A	RESIDENTIAL TRIMRIB® ROOFING	PARALLEL APRON DIVERTER JUNCTION
RI-RTR028A	RESIDENTIAL TRIMRIB® ROOFING	RAKING INTERNAL GUTTER
RI-RTR030A	RESIDENTIAL TRIMRIB® ROOFING	ROOFING INDUSTRIES GUTTER OPTIONS QUARTER & 1/2 ROUND FOR TIMBER FASCIA
RI-RTR030B	RESIDENTIAL TRIMRIB® ROOFING	ROOFING INDUSTRIES GUTTER OPTIONS 125 BOX GUTTER & OLD GOTHIC FOR TIMBER FASCIA
RI-RTW001A-1	RESIDENTIAL TRIMRIB® WALL CLADDING	BARGE DETAIL FOR VERTICAL CLADDING ON CAVITY (KICK OUT)
RI-RTW001B-1	RESIDENTIAL TRIMRIB® WALL CLADDING	BARGE DETAIL FOR VERTICAL CLADDING ON CAVITY (BIRDS BEAK)
RI-RTW002A-1	RESIDENTIAL TRIMRIB® WALL CLADDING	HEAD BARGE FOR VERTICAL CLADDING ON CAVITY ON CAVITY (KICK OUT)
RI-RTW002B-1	RESIDENTIAL TRIMRIB® WALL CLADDING	HEAD BARGE FOR VERTICAL CLADDING ON CAVITY (BIRDS BEAK)
RI-RTW003A-1	RESIDENTIAL TRIMRIB® WALL CLADDING	STANDARD EXTERNAL CORNER FOR VERTICAL CLADDING ON CAVITY
RI-RTW003B-1	RESIDENTIAL TRIMRIB® WALL CLADDING	EXTERNAL CORNER FOR VERTICAL CLADDING ON CAVITY WITH CLADDING CHANGE
RI-RTW004A-1	RESIDENTIAL TRIMRIB® WALL CLADDING	STANDARD INTERNAL CORNER FOR VERTICAL CLADDING ON CAVITY
RI-RTW004B-1	RESIDENTIAL TRIMRIB® WALL CLADDING	INTERNAL CORNER FOR VERTICAL CLADDING WITH CLADDING CHANGE
RI-RTW005A-1	RESIDENTIAL TRIMRIB® WALL CLADDING	BOTTOM OF CLADDING FOR VERTICAL TRIMRIB ON CAVITY
RI-RTW006A-1	RESIDENTIAL TRIMRIB® WALL CLADDING	SOFFIT FLASHING FOR VERTICAL TRIMRIB ON CAVITY
RI-RTW007A-1	RESIDENTIAL TRIMRIB® WALL CLADDING	SLOPING SOFFIT FLASHING FOR VERTICAL TRIMRIB ON CAVITY
RI-RTW009A-1	RESIDENTIAL TRIMRIB® WALL CLADDING	VERTICAL BUTT JOINT - VERTICAL CLADDING ON CAVITY WITH CLADDING CHANGE (DIRECT FIXED)
RI-RTW009B-1	RESIDENTIAL TRIMRIB® WALL CLADDING	VERTICAL BUTT JOINT - VERTICAL CLADDING ON CAVITY WITH CLADDING CHANGE (CAVITY)
RI-RTW010A-1	RESIDENTIAL TRIMRIB® WALL CLADDING	VERTICAL CLADDING ON CAVITY JUNCTION FLASHING
RI-RTW011A-1	RESIDENTIAL TRIMRIB® WALL CLADDING	BALUSTRADE FOR VERTICAL CLADDING ON CAVITY
RI-RTW012A-1	RESIDENTIAL TRIMRIB® WALL CLADDING	HEAD FLASHING FOR VERTICAL CLADDING ON CAVITY (RECESSED WINDOW/DOOR)
RI-RTW012B-1	RESIDENTIAL TRIMRIB® WALL CLADDING	JAMB FLASHING FOR VERTICAL CLADDING ON CAVITY. (RECESSED WINDOW/DOOR)
RI-RTW012C-1	RESIDENTIAL TRIMRIB® WALL CLADDING	SILL FLASHING FOR VERTICAL CLADDING ON CAVITY. (RECESSED WINDOW/DOOR)
RI-RTW015A-1	RESIDENTIAL TRIMRIB® WALL CLADDING	METER BOX HEAD FLASHING FOR VERTICAL CLADDING ON CAVITY
RI-RTW016A-1	RESIDENTIAL TRIMRIB® WALL CLADDING	METER BOX SIDE FLASHING FOR VERTICAL CLADDING ON CAVITY
RI-RTW017A-1	RESIDENTIAL TRIMRIB® WALL CLADDING	METER BOX BASE FLASHING FOR VERTICAL CLADDING ON CAVITY

RESIDENTIAL TRIMRIB SHEET LIST

Sheet Number	Type	Sheet Name
RI-RTW021A	RESIDENTIAL TRIMRIB® WALL CLADDING	BARGE DETAIL FOR HORIZONTAL CLADDING (KICK OUT)
RI-RTW021B	RESIDENTIAL TRIMRIB® WALL CLADDING	BARGE DETAIL FOR HORIZONTAL CLADDING (BIRDS BEAK)
RI-RTW023A	RESIDENTIAL TRIMRIB® WALL CLADDING	EXTERNAL CORNER FLASHING FOR HORIZONTAL CLADDING
RI-RTW023B	RESIDENTIAL TRIMRIB® WALL CLADDING	ALTERNATIVE EXTERNAL CORNER FLASHING FOR HORIZONTAL CLADDING
RI-RTW024A	RESIDENTIAL TRIMRIB® WALL CLADDING	INTERNAL CORNER FLASHING FOR HORIZONTAL CLADDING
RI-RTW024B	RESIDENTIAL TRIMRIB® WALL CLADDING	ALTERNATIVE INTERNAL CORNER FLASHING FOR HORIZONTAL CLADDING
RI-RTW025A	RESIDENTIAL TRIMRIB® WALL CLADDING	BOTTOM OF CLADDING FOR HORIZONTAL TRIMRIB
RI-RTW026A	RESIDENTIAL TRIMRIB® WALL CLADDING	SOFFIT FLASHING FOR HORIZONTAL TRIMRIB
RI-RTW027A	RESIDENTIAL TRIMRIB® WALL CLADDING	SLOPING SOFFIT FLASHING FOR HORIZONTAL TRIMRIB
RI-RTW028A	RESIDENTIAL TRIMRIB® WALL CLADDING	VERTICAL BUTT JOINT FOR HORIZONTAL CLADDING
RI-RTW028B	RESIDENTIAL TRIMRIB® WALL CLADDING	VERTICAL BUTT JOINT FOR HORIZONTAL CLADDING, OPT 2
RI-RTW029A	RESIDENTIAL TRIMRIB® WALL CLADDING	VERTICAL BUTT JOINT FOR HORIZONTAL CLADDING TO ALTERNATIVE CLADDING (UP TO 25MM)
RI-RTW030A	RESIDENTIAL TRIMRIB® WALL CLADDING	HORIZONTAL CLADDING JUNCTION FLASHING
RI-RTW031A	RESIDENTIAL TRIMRIB® WALL CLADDING	BALUSTRADE FOR HORIZONTAL CLADDING
RI-RTW032A	RESIDENTIAL TRIMRIB® WALL CLADDING	HEAD FLASHING FOR HORIZONTAL CLADDING (RECESSED WINDOW/DOOR)
RI-RTW032B	RESIDENTIAL TRIMRIB® WALL CLADDING	JAMB FLASHING FOR HORIZONTAL CLADDING (RECESSED WINDOW/DOOR)
RI-RTW032C	RESIDENTIAL TRIMRIB® WALL CLADDING	SILL FLASHING FOR HORIZONTAL CLADDING (RECESSED WINDOW/DOOR)
RI-RTW040A	RESIDENTIAL TRIMRIB® WALL CLADDING	METER BOX HEAD FLASHING FOR HORIZONTAL CLADDING
RI-RTW041A	RESIDENTIAL TRIMRIB® WALL CLADDING	METER BOX SIDE FLASHING FOR HORIZONTAL CLADDING
RI-RTW042A	RESIDENTIAL TRIMRIB® WALL CLADDING	METER BOX BASE FLASHING FOR HORIZONTAL CLADDING

Roofing Industries

roof.co.nz

RESIDENTIAL TRIMRIB
PROFILES & ACCESSORIES

Detail Number: RI-RT00B
Date drawn: 07/07/2017
Scale: 1 : 5@ A4

ROOFING INDUSTRIES 'TRIMRIB'

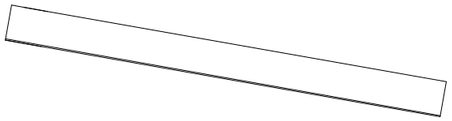

ROOFING INDUSTRIES BARGE FLASHING

ROOFING INDUSTRIES BARGE/PARAPET CAPPING

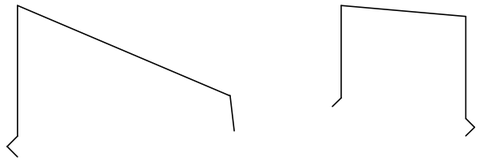

ROOFING INDUSTRIES CHANGE IN PITCH FLASHING

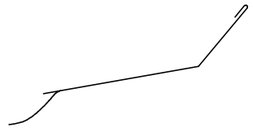

ROOFING INDUSTRIES GUTTER APRON FLASHING

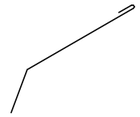

ROOFING INDUSTRIES 'TRIMRIB'

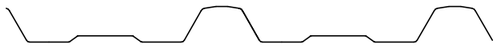

ROOFING INDUSTRIES RIDGE FLASHING

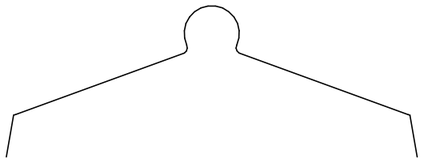

ROOFING INDUSTRIES APRON FLASHING

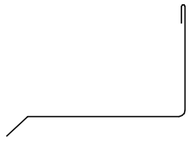

HEAD FLASHING

ROOFING INDUSTRIES COVER FLASHING

ROOFING INDUSTRIES SOFFIT FLASHING

FIXINGS

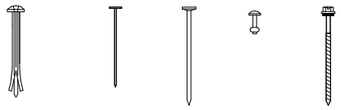

HEAD FLASHING

JAMB FLASHING

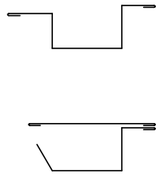

ALTERNATE JAMB FLASHING

SILL FLASHING

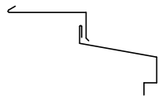

ROOFING INDUSTRIES METER BOX BASE FLASHING

ROOFING INDUSTRIES CLADDING CHANGE/JAMB FLASHING

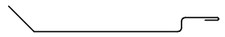

CAVITY CLOSER

METAL ANGLE

ROOFING INDUSTRIES CORNER FLASHING

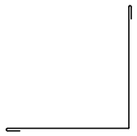

ROOFING INDUSTRIES INTERNAL CORNER

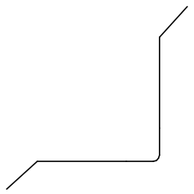

ROOFING INDUSTRIES EXTERNAL CORNER

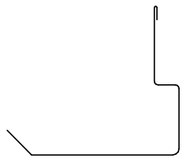

ROOFING INDUSTRIES VERTICAL BUTT JOINT FLASHING

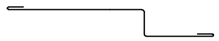

ROOFING INDUSTRIES CLADDING BASE FLASHING

Roofing Industries
roof.co.nz

RESIDENTIAL TRIMRIB
PROFILE SUMMARY - TRIMRIB

Detail Number: RI-RT00C
Date drawn: 03/03/2019

'TRIMRIB' Lap

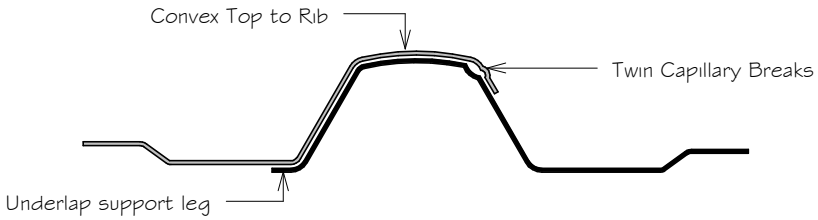

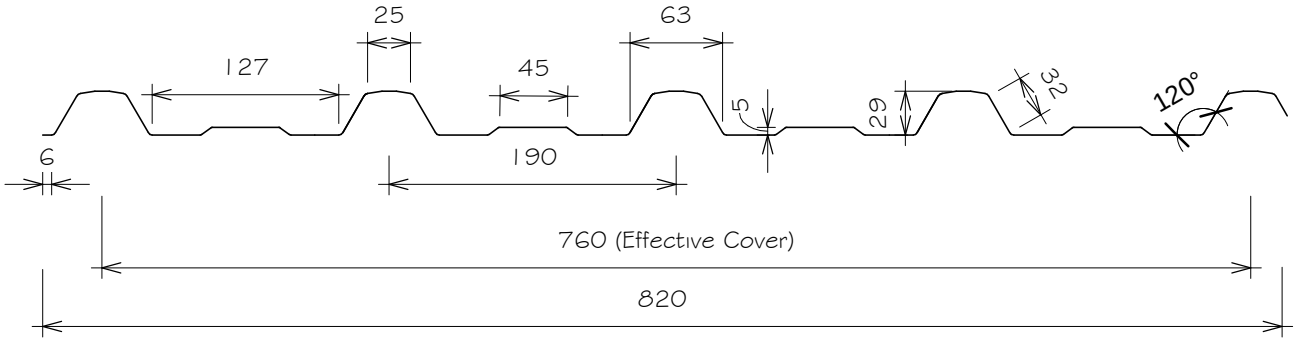

'TRIMRIB' S

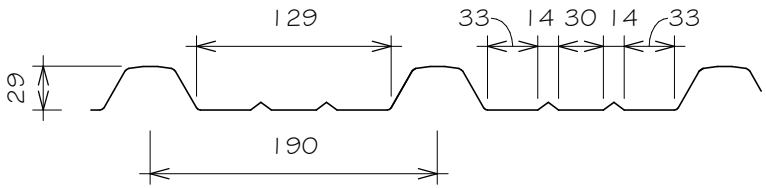

'TRIMRIB' V

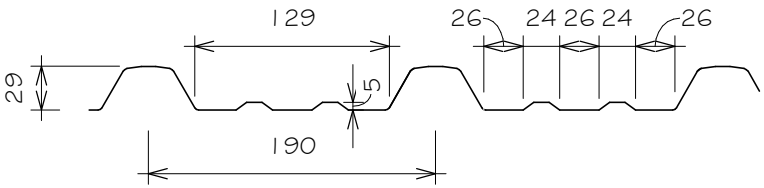

'TRIMRIB' TS

Minimum Pitch

The minimum roof pitch for 'TRIMRIB' is 3 degrees.
When a combination of sheets provide a run of in excess of 40 metres and up to 60 metres the roof pitch should be increased by 1 degree. Longer lengths require specific design.
When rainfall intensity exceeds 100mm/hour the minimum pitches need to be increased by a further 1 degree for every 10 metres of run over 40 metres
The building design pitch may need to be higher to take into account any cumulative deflections of the frame, purlin and roof sheeting or penetrations.
For curved roofing the roof cladding must not terminate at a pitch lower than permitted above.
Side laps of curved sheets must be sealed to any areas below the minimum pitches permitted above.

Roofing Industries
roof.co.nz

RESIDENTIAL TRIMRIB® ROOFING
TYPICAL TRUSS ROOF

Detail Number: RI-RTR000A
Date drawn: 07/07/2017
Scale: 1 : 5@ A4

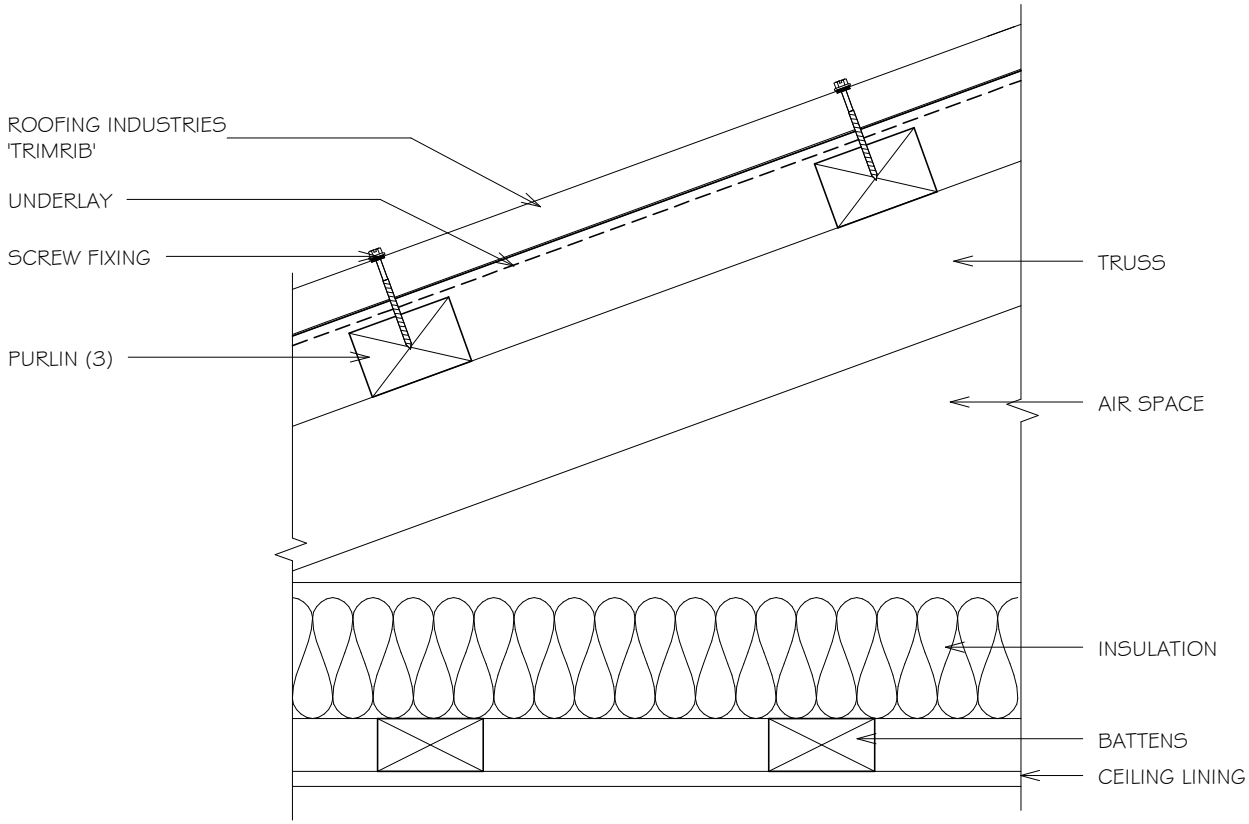

NOTE:
1. MINIMUM PITCH 3°.
2. VENTILATION OF ATTIC / ROOF SPACE MAY BE REQUIRED. REFER TO MRM CODE OF PRACTICE.
3. VENTILATED/CASTELLATED PURLIN MAY BE USED

NOTES:

- These details are generally in compliance with E2/AS1 and/or the NZ Metal Roof & Wall Cladding Code of Practice and in some cases specific details by 'Roofing Industries'.
- The building designer is ultimatley responsible to ensure that details used meet the requirements of the NZ Building Code for the specific project.
- Details of the supporting structure including cavity battens are indicative only and are the responsibility of the building designer. For steel framed buildings thermal break cavity battens may be required.
- Underlay selection and building wrap types are the responsibility of the designer, Netting or other support is generally required at roof pitches less than 8 degrees combined with a self supporting paper. At roof pitches of 8° and above where non self supporting paper is used or purlin spacing is in excess of self supporting criteria, netting or other support should be used. Alternative support to netting should be used in severe coastal environments including when aluminium is used.
- These details are for Roofing Industries profile/s as nominated and may not be applicable to other profiles.
- This drawing is the copyright of 'Roofing Industries' and can only be copied or reproduced with their permission.
- These details to be read with Roofing Industries profile technical summary regarding wind loads and fixings.
- Further information can be obtained from the NZ Metal Roof & Wall Cladding Code of Practice: www.metalroofing.org.nz OR NZBC clause E2/AS1.

Roofing Industries
roof.co.nz

RESIDENTIAL TRIMRIB® ROOFING
TYPICAL RAFTER / SLOPING CEILING ROOF

Detail Number: RI-RTR000B

Date drawn: 07/07/2017

Scale: 1 : 5@ A4

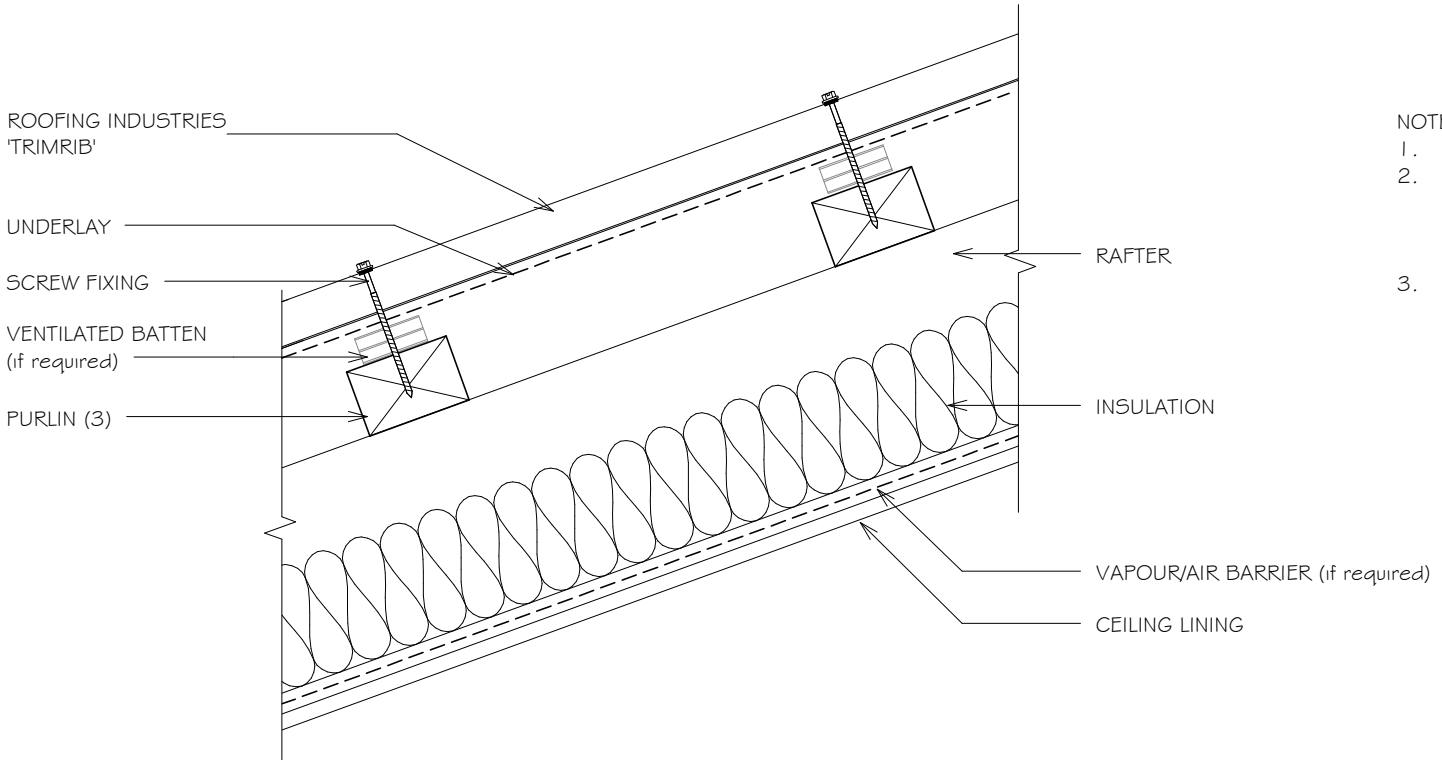

NOTE:

1. MINIMUM PITCH 3°.
2. VENTILATION OF ATTIC / ROOF SPACE MAY BE REQUIRED. REFER TO MRM CODE OF PRACTICE.
3. VENTILATED/CASTELLATED PURLIN MAY BE USED

NOTES:

- These details are generally in compliance with E2/AS1 and/or the NZ Metal Roof & Wall Cladding Code of Practice and in some cases specific details by 'Roofing Industries'.
- The building designer is ultimatley responsible to ensure that details used meet the requirements of the NZ Building Code for the specific project.
- Details of the supporting structure including cavity battens are indicative only and are the responsibility of the building designer. For steel framed buildings thermal break cavity battens may be required.
- Underlay selection and building wrap types are the responsibility of the designer, Netting or other support is generally required at roof pitches less than 8 degrees combined with a self supporting paper. At roof pitches of 8° and above where non self supporting paper is used or purlin spacing is in excess of self supporting criteria, netting or other support should be used. Alternative support to netting should be used in severe coastal environments including when aluminium is used.
- These details are for Roofing Industries profile/s as nominated and may not be applicable to other profiles.
- This drawing is the copyright of 'Roofing Industries' and can only be copied or reproduced with their permission.
- These details to be read with Roofing Industries profile technical summary regarding wind loads and fixings.
- Further information can be obtained from the NZ Metal Roof & Wall Cladding Code of Practice: www.metalroofing.org.nz OR NZBC clause E2/AS1.

Roofing Industries
roof.co.nz

RESIDENTIAL TRIMRIB® ROOFING
TYPICAL EXPOSED RAFTER ROOF

Detail Number: RI-RTR000C

Date drawn: 07/07/2017

Scale: 1 : 5@ A4

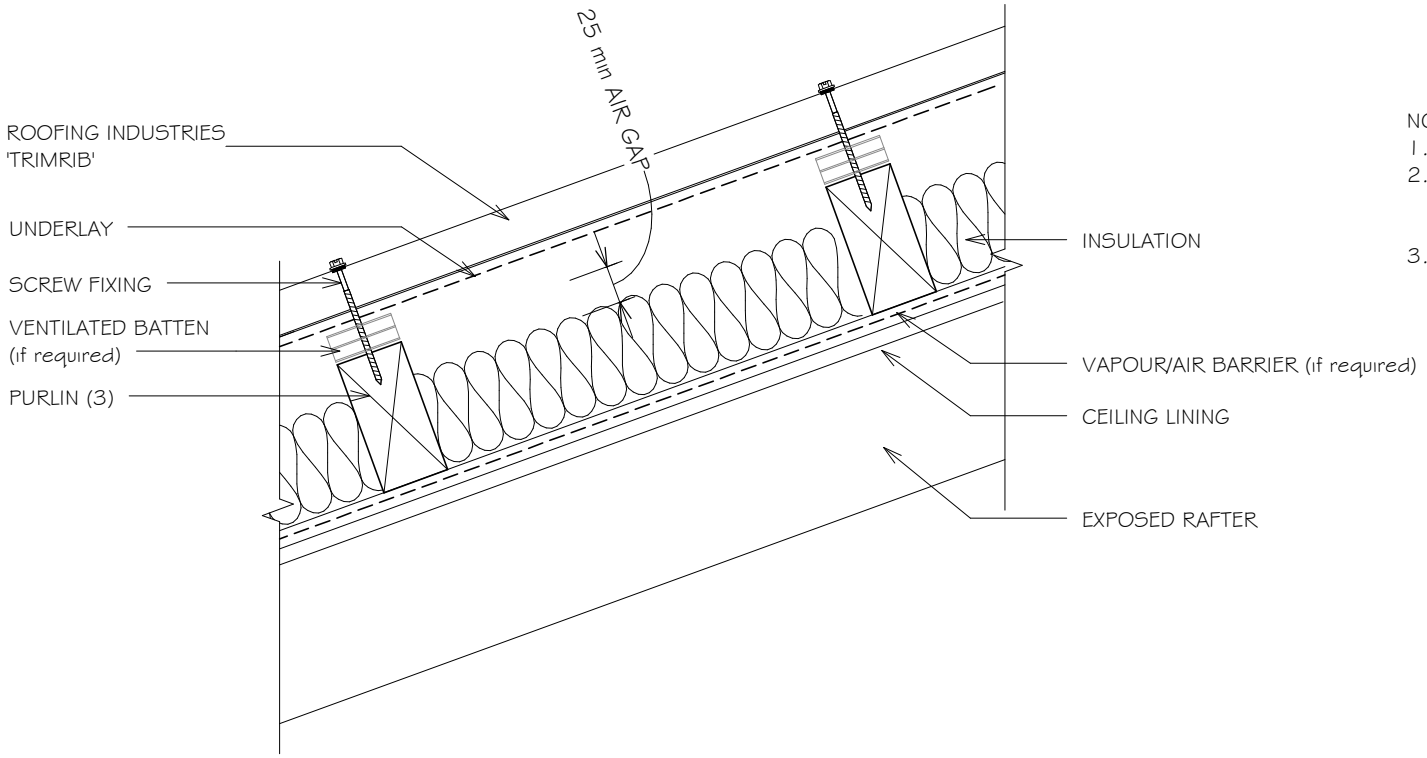

NOTE:

1. MINIMUM PITCH 3°.
2. VENTILATION OF ATTIC / ROOF SPACE MAY BE REQUIRED. REFER TO MRM CODE OF PRACTICE.
3. VENTILATED/CASTELLATED PURLIN MAY BE USED

NOTES:

- These details are generally in compliance with E2/AS1 and/or the NZ Metal Roof & Wall Cladding Code of Practice and in some cases specific details by 'Roofing Industries'.
- The building designer is ultimatley responsible to ensure that details used meet the requirements of the NZ Building Code for the specific project.
- Details of the supporting structure including cavity battens are indicative only and are the responsibility of the building designer. For steel framed buildings thermal break cavity battens may be required.
- Underlay selection and building wrap types are the responsibility of the designer, Netting or other support is generally required at roof pitches less than 8 degrees combined with a self supporting paper. At roof pitches of 8° and above where non self supporting paper is used or purlin spacing is in excess of self supporting criteria, netting or other support should be used. Alternative support to netting should be used in severe coastal environments including when aluminium is used.
- These details are for Roofing Industries profile/s as nominated and may not be applicable to other profiles.
- This drawing is the copyright of 'Roofing Industries' and can only be copied or reproduced with their permission.
- These details to be read with Roofing Industries profile technical summary regarding wind loads and fixings.
- Further information can be obtained from the NZ Metal Roof & Wall Cladding Code of Practice: www.metalroofing.org.nz OR NZBC clause E2/AS1.

Roofing Industries
roof.co.nz

RESIDENTIAL TRIMRIB® ROOFING
BARGE DETAIL (KICK OUT)

Detail Number: RI-RTR001A
Date drawn: 07/07/2017
Scale: 1 : 5@ A4

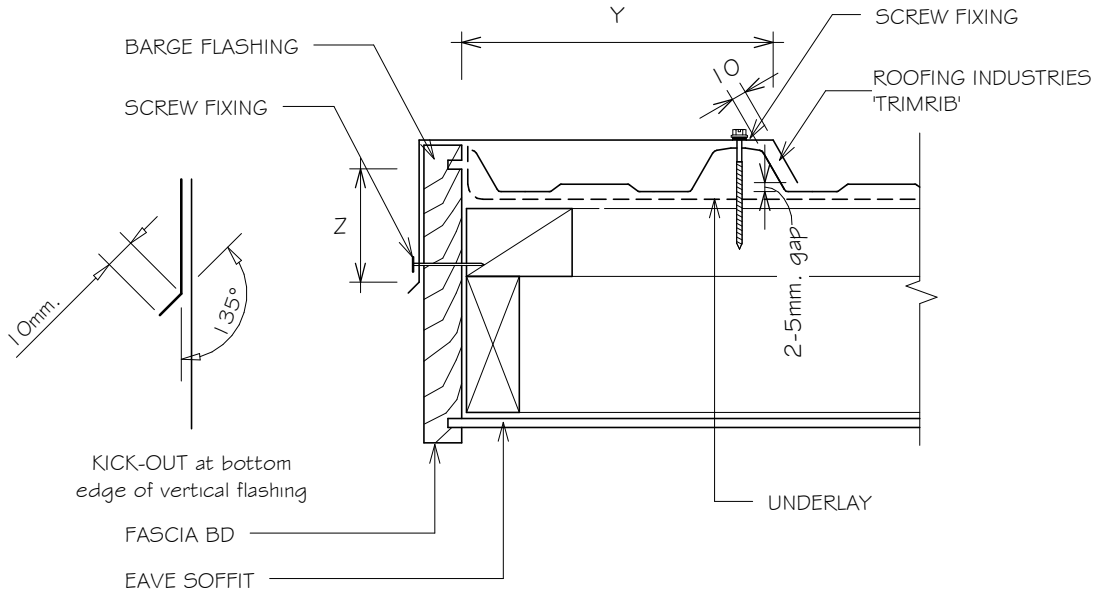

SITE WIND ZONE (As per NZS3604)		MINIMUM	
		Z (5)	Y
SITUATION 1	(1)	50mm (4)	2 crests
SITUATION 2	(2)	75mm (4)	2 "
SITUATION 3	(3)	90mm (4)	2 "

NOTES:

1. SITUATION 1: IN LOW, MEDIUM OR HIGH WIND ZONES, WHERE ROOF PITCH IS 10° OR GREATER.
2. SITUATION 2: FOR ALL ROOF PITCHES IN VERY HIGH WIND ZONES, FOR ALL LESSER WIND ZONES WHERE ROOF PITCH IS LESS THAN 10°.
3. SITUATION 3: FOR ALL ROOF PITCHES IN EXTRA HIGH HIGH ZONES.
4. EXCLUDING DRIP EDGE.
5. INCREASE DISTANCE 'Z' BY 25mm WHEN AGAINST A PROFILED SURFACE OR TO 100mm WHICHEVER IS THE LESSER.

NOTES:

- These details are generally in compliance with E2/AS1 and/or the NZ Metal Roof & Wall Cladding Code of Practice and in some cases specific details by 'Roofing Industries'.
- The building designer is ultimatley responsible to ensure that details used meet the requirements of the NZ Building Code for the specific project.
- Details of the supporting structure including cavity battens are indicative only and are the responsibility of the building designer. For steel framed buildings thermal break cavity battens may be required.
- Underlay selection and building wrap types are the responsibility of the designer, Netting or other support is generally required at roof pitches less than 8 degrees combined with a self supporting paper. At roof pitches of 8° and above where non self supporting paper is used or purlin spacing is in excess of self supporting criteria, netting or other support should be used. Alternative support to netting should be used in severe coastal environments including when aluminium is used.
- These details are for Roofing Industries profile/s as nominated and may not be applicable to other profiles.
- This drawing is the copyright of 'Roofing Industries' and can only be copied or reproduced with their permission.
- These details to be read with Roofing Industries profile technical summary regarding wind loads and fixings.
- Further information can be obtained from the NZ Metal Roof & Wall Cladding Code of Practice: www.metalroofing.org.nz OR NZBC clause E2/AS1.

Roofing Industries
roof.co.nz

RESIDENTIAL TRIMRIB® ROOFING
BARGE DETAIL (BIRDS BEAK)

Detail Number: RI-RTR001B
Date drawn: 07/07/2017
Scale: 1 : 5@ A4

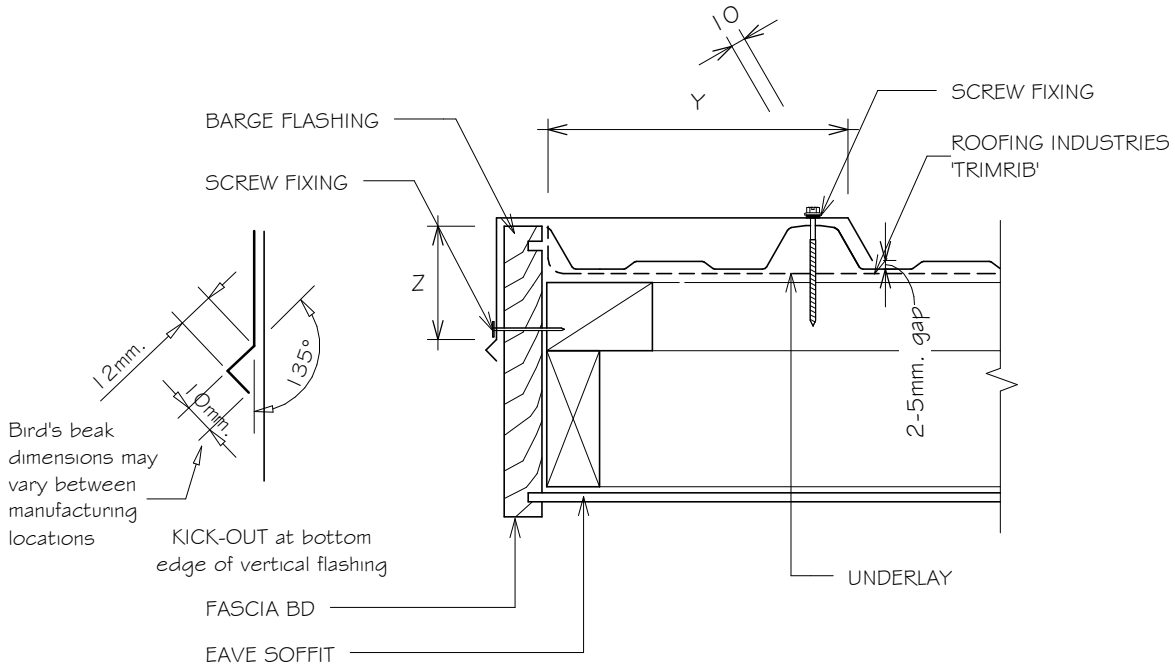

SITE WIND ZONE (As per NZS3604)	MINIMUM	
	Z (5)	Y
SITUATION 1 (1)	50mm (4)	2 crests
SITUATION 2 (2)	75mm (4)	2 "
SITUATION 3 (3)	90mm (4)	2 "

NOTES:

1. SITUATION 1: IN LOW, MEDIUM OR HIGH WIND ZONES, WHERE ROOF PITCH IS 10° OR GREATER.
2. SITUATION 2: FOR ALL ROOF PITCHES IN VERY HIGH WIND ZONES, FOR ALL LESSER WIND ZONES WHERE ROOF PITCH IS LESS THAN 10°.
3. SITUATION 3: FOR ALL ROOF PITCHES IN EXTRA HIGH HIGH ZONES.
4. EXCLUDING DRIP EDGE.
5. INCREASE DISTANCE 'Z' BY 25mm WHEN AGAINST A PROFILED SURFACE OR TO 100mm WHICHEVER IS THE LESSER.

NOTES:

- These details are generally in compliance with E2/AS1 and/or the NZ Metal Roof & Wall Cladding Code of Practice and in some cases specific details by 'Roofing Industries'.
- The building designer is ultimatley responsible to ensure that details used meet the requirements of the NZ Building Code for the specific project.
- Details of the supporting structure including cavity battens are indicative only and are the responsibility of the building designer. For steel framed buildings thermal break cavity battens may be required.
- Underlay selection and building wrap types are the responsibility of the designer, Netting or other support is generally required at roof pitches less than 8 degrees combined with a self supporting paper. At roof pitches of 8° and above where non self supporting paper is used or purlin spacing is in excess of self supporting criteria, netting or other support should be used. Alternative support to netting should be used in severe coastal environments including when aluminium is used.
- These details are for Roofing Industries profile/s as nominated and may not be applicable to other profiles.
- This drawing is the copyright of 'Roofing Industries' and can only be copied or reproduced with their permission.
- These details to be read with Roofing Industries profile technical summary regarding wind loads and fixings.
- Further information can be obtained from the NZ Metal Roof & Wall Cladding Code of Practice: www.metalroofing.org.nz OR NZBC clause E2/AS1.

Roofing Industries
roof.co.nz

RESIDENTIAL TRIMRIB® ROOFING
HEAD BARGE DETAIL (KICK OUT)

Detail Number: RI-RTR002A
Date drawn: 07/07/2017
Scale: 1 : 5@ A4

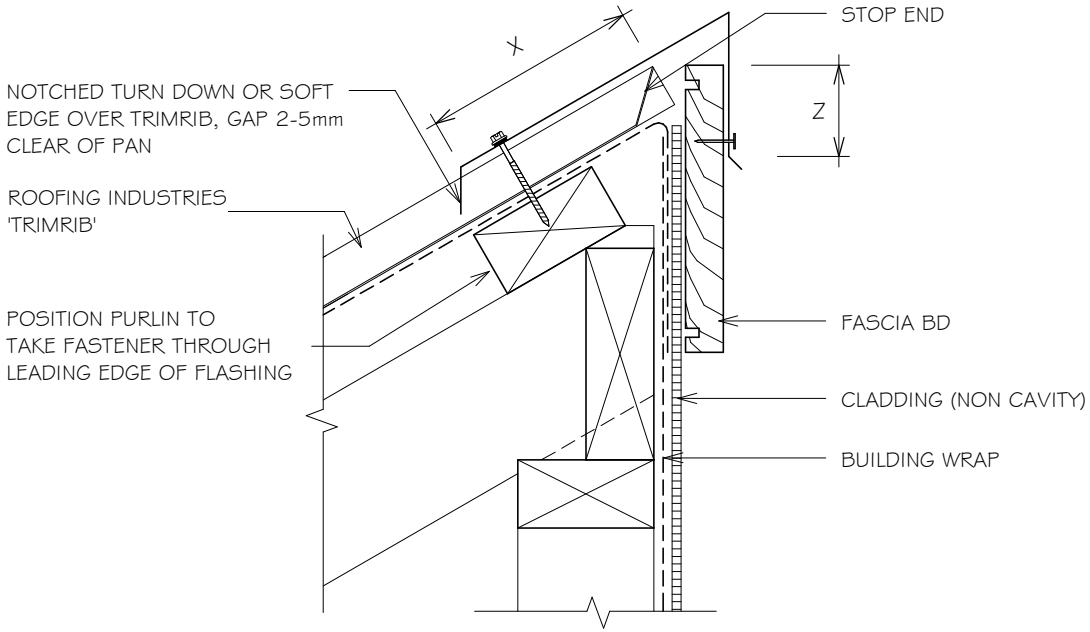

SITE WIND ZONE (As per NZS3604)		MINIMUM	
		Z (5)	X
SITUATION 1	(1)	50mm (4)	150mm (6)
SITUATION 2	(2)	75mm (4)	200mm (6)
SITUATION 3	(3)	90mm (4)	200mm (6)

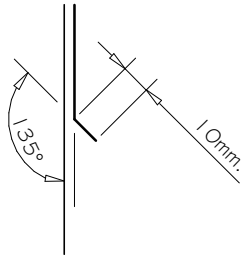

KICK-OUT at bottom edge of vertical flashing

NOTES:

1. SITUATION 1: IN LOW, MEDIUM OR HIGH WIND ZONES, WHERE ROOF PITCH IS 10° OR GREATER.
2. SITUATION 2: FOR ALL ROOF PITCHES IN VERY HIGH WIND ZONES, FOR ALL LESSER WIND ZONES WHERE ROOF PITCH IS LESS THAN 10°.
3. SITUATION 3: FOR ALL ROOF PITCHES IN EXTRA HIGH HIGH ZONES.
4. EXCLUDING DRIP EDGE.
5. INCREASE DISTANCE 'Z' BY 25mm WHEN AGAINST A PROFILED SURFACE OR TO 100mm WHICHEVER IS THE LESSER.
6. EXCLUDING ANY SOFT EDGE OR TURN-DOWN TO ROOFING.

NOTES:

- These details are generally in compliance with E2/AS1 and/or the NZ Metal Roof & Wall Cladding Code of Practice and in some cases specific details by 'Roofing Industries'.
- The building designer is ultimatley responsible to ensure that details used meet the requirements of the NZ Building Code for the specific project.
- Details of the supporting structure including cavity battens are indicative only and are the responsibility of the building designer. For steel framed buildings thermal break cavity battens may be required.
- Underlay selection and building wrap types are the responsibility of the designer, Netting or other support is generally required at roof pitches less than 8 degrees combined with a self supporting paper. At roof pitches of 8° and above where non self supporting paper is used or purlin spacing is in excess of self supporting criteria, netting or other support should be used. Alternative support to netting should be used in severe coastal environments including when aluminium is used.
- These details are for Roofing Industries profile/s as nominated and may not be applicable to other profiles.
- This drawing is the copyright of 'Roofing Industries' and can only be copied or reproduced with their permission.
- These details to be read with Roofing Industries profile technical summary regarding wind loads and fixings.
- Further information can be obtained from the NZ Metal Roof & Wall Cladding Code of Practice: www.metalroofing.org.nz OR NZBC clause E2/AS1.

Roofing Industries
roof.co.nz

RESIDENTIAL TRIMRIB® ROOFING
HEAD BARGE DETAIL (BIRDS BEAK)

Detail Number: RI-RTR002B
Date drawn: 07/07/2017
Scale: 1 : 5@ A4

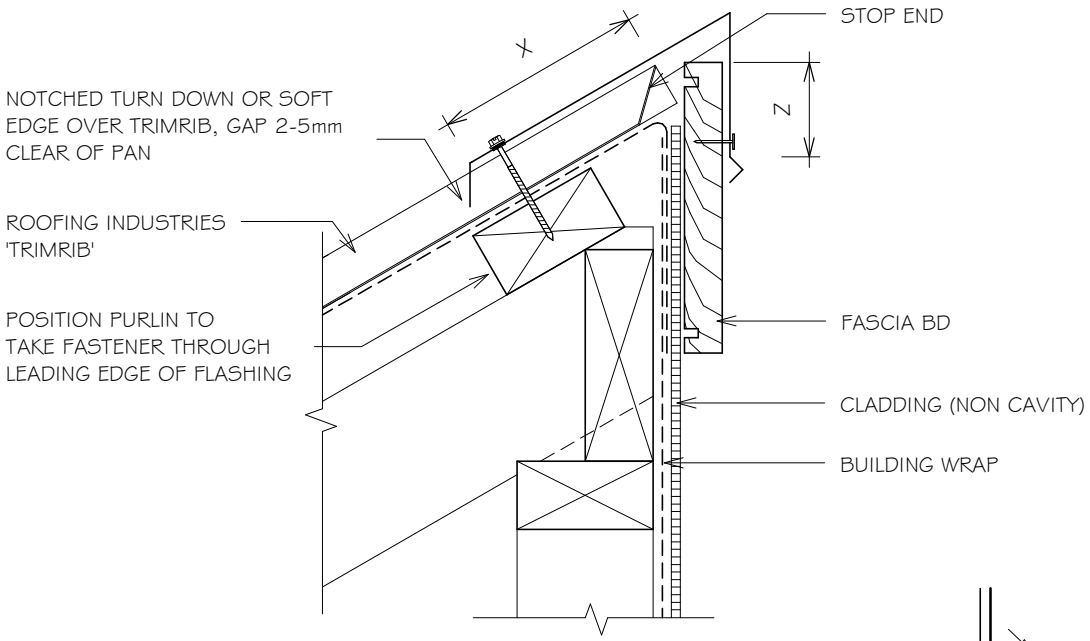

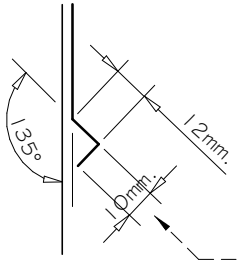

Bird's beak dimensions may vary between manufacturing locations.

SITE WIND ZONE (As per NZS3604)		MINIMUM		
		Z (5)		x
SITUATION 1	(1)	50mm	(4)	150mm (6)
SITUATION 2	(2)	75mm	(4)	200mm (6)
SITUATION 3	(3)	90mm	(4)	200mm (6)

NOTES:

1. SITUATION 1: IN LOW, MEDIUM OR HIGH WIND ZONES, WHERE ROOF PITCH IS 10° OR GREATER.
2. SITUATION 2: FOR ALL ROOF PITCHES IN VERY HIGH WIND ZONES, FOR ALL LESSER WIND ZONES WHERE ROOF PITCH IS LESS THAN 10°.
3. SITUATION 3: FOR ALL ROOF PITCHES IN EXTRA HIGH HIGH ZONES.
4. EXCLUDING DRIP EDGE.
5. INCREASE DISTANCE 'Z' BY 25mm WHEN AGAINST A PROFILED SURFACE OR TO 100mm WHICHEVER IS THE LESSER.
6. EXCLUDING ANY SOFT EDGE OR TURN-DOWN TO ROOFING.

NOTES:

- These details are generally in compliance with E2/AS1 and/or the NZ Metal Roof & Wall Cladding Code of Practice and in some cases specific details by 'Roofing Industries'.
- The building designer is ultimatley responsible to ensure that details used meet the requirements of the NZ Building Code for the specific project.
- Details of the supporting structure including cavity battens are indicative only and are the responsibility of the building designer. For steel framed buildings thermal break cavity battens may be required.
- Underlay selection and building wrap types are the responsibility of the designer, Netting or other support is generally required at roof pitches less than 8 degrees combined with a self supporting paper. At roof pitches of 8° and above where non self supporting paper is used or purlin spacing is in excess of self supporting criteria, netting or other support should be used. Alternative support to netting should be used in severe coastal environments including when aluminium is used.
- These details are for Roofing Industries profile/s as nominated and may not be applicable to other profiles.
- This drawing is the copyright of 'Roofing Industries' and can only be copied or reproduced with their permission.
- These details to be read with Roofing Industries profile technical summary regarding wind loads and fixings.
- Further information can be obtained from the NZ Metal Roof & Wall Cladding Code of Practice: www.metalroofing.org.nz OR NZBC clause E2/AS1.

Roofing Industries
roof.co.nz

RESIDENTIAL TRIMRIB® ROOFING
CHANGE IN PITCH

Detail Number: RI-RTR003A
Date drawn: 07/07/2017
Scale: 1 : 5@ A4

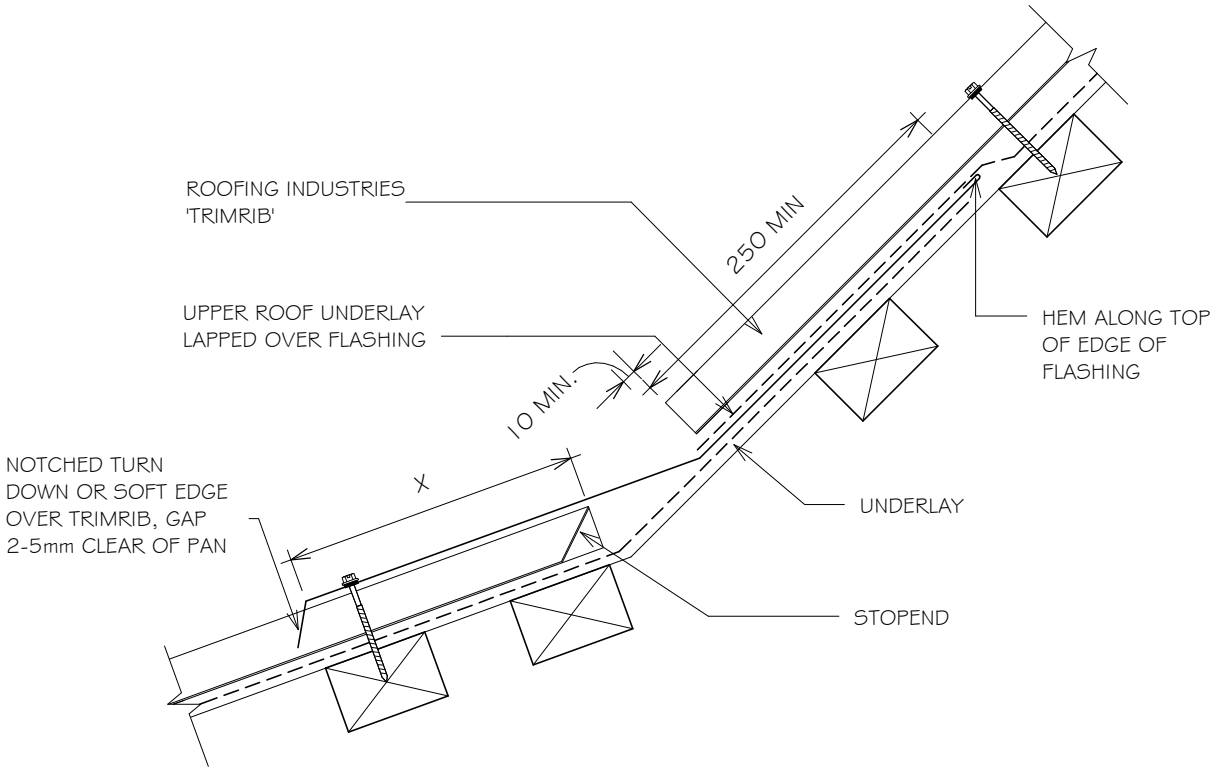

SITE WIND ZONE (As per NZS3604)	MIN mm	(X)
	UPPER LAP UNDER ROOFING	TRANSVERSE FLASHING OVER ROOFING
SITUATION 1 (2)	250 (1)	150 (5)
SITUATION 2 (3)	250 (1)	200 (5)
SITUATION 3 (4)	(6)	

NOTES:

1. UNLESS OTHERWISE DIMENSIONED IN DETAILS
2. SITUATION 1: IN LOW, MEDIUM OR HIGH WIND ZONES, WHERE ROOF PITCH IS 10° OR GREATER.
3. SITUATION 2: FOR ALL ROOF PITCHES IN VERY HIGH WIND ONES, FOR ALL LESSOR WIND ZONES WHERE ROOF PITCH LESS THAN 10°.
4. SITUATION 3: FOR ALL ROOF PITCHES IN EXTRA HIGH WIND ZONES
5. EXCLUDING ANY SOFT EDGE OR TURN-DOWN TO ROOFING.
6. NOT PERMITTED UNDER E2/AS1, REFER NZ METAL ROOF & WALL CLADDING CODE OF PRACTICE.

NOTES:

- These details are generally in compliance with E2/AS1 and/or the NZ Metal Roof & Wall Cladding Code of Practice and in some cases specific details by 'Roofing Industries'.
- The building designer is ultimatley responsible to ensure that details used meet the requirements of the NZ Building Code for the specific project.
- Details of the supporting structure including cavity battens are indicative only and are the responsibility of the building designer. For steel framed buildings thermal break cavity battens may be required.
- Underlay selection and building wrap types are the responsibility of the designer, Netting or other support is generally required at roof pitches less than 8 degrees combined with a self supporting paper. At roof pitches of 8° and above where non self supporting paper is used or purlin spacing is in excess of self supporting criteria, netting or other support should be used. Alternative support to netting should be used in severe coastal environments including when aluminium is used.
- These details are for Roofing Industries profile/s as nominated and may not be applicable to other profiles.
- This drawing is the copyright of 'Roofing Industries' and can only be copied or reproduced with their permission.
- These details to be read with Roofing Industries profile technical summary regarding wind loads and fixings.
- Further information can be obtained from the NZ Metal Roof & Wall Cladding Code of Practice: www.metalroofing.org.nz OR NZBC clause E2/AS1.

Roofing Industries
roof.co.nz

RESIDENTIAL TRIMRIB® ROOFING
GUTTER APRON

Detail Number: RI-RTR004A
Date drawn: 07/07/2017
Scale: 1 : 5@ A4

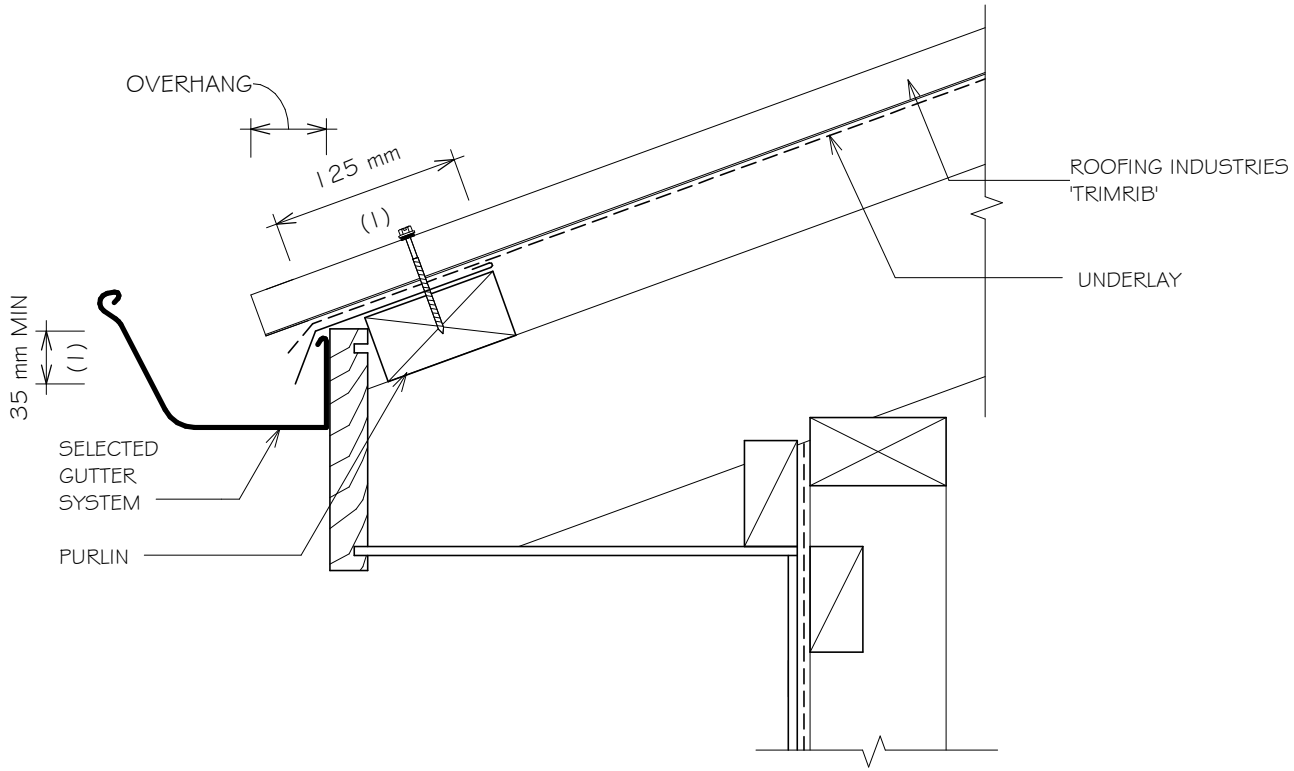

NOTES:

1. REQUIRED TO ALL ROOFS UNDER 10° WHERE ALL OF THE FOLLOWING CONDITIONS No. 2-4 ARE MET.
2. ROOFS UNDER 10° PITCH.
3. WHERE EAVES OVERHANG IS LESS THAN OR EQUAL TO 100mm.
4. WHERE WIND ZONES ARE VERY HIGH OR EXTRA HIGH.
5. ALSO RECOMMENDED IN VERY CORROSIVE ENVIRONMENTS AND WHEN SPOUTING IS LOW.
6. DESIGNER MAY ALSO CHOOSE TO INCLUDE OPTIONALLY.
7. ALL ROOF CLADDING WITH A PITCH OF LESS THAN 8 DEGREES MUST BE PROVIDED WITH TURN DOWN TO ENSURE WATER IS DIRECTED INTO GUTTER.
8. ROOF OVERHANG:
   < 10 DEGREES = 70mm
   10 - 35 DEGREES = 50mm
   35 - 40 DEGREES = 40mm

REFER TO MRM CODE OF PRACTICE.

NOTES:

- These details are generally in compliance with E2/AS1 and/or the NZ Metal Roof & Wall Cladding Code of Practice and in some cases specific details by 'Roofing Industries'.
- The building designer is ultimatley responsible to ensure that details used meet the requirements of the NZ Building Code for the specific project.
- Details of the supporting structure including cavity battens are indicative only and are the responsibility of the building designer. For steel framed buildings thermal break cavity battens may be required.
- Underlay selection and building wrap types are the responsibility of the designer, Netting or other support is generally required at roof pitches less than 8 degrees combined with a self supporting paper. At roof pitches of 8° and above where non self supporting paper is used or purlin spacing is in excess of self supporting criteria, netting or other support should be used. Alternative support to netting should be used in severe coastal environments including when aluminium is used.
- These details are for Roofing Industries profile/s as nominated and may not be applicable to other profiles.
- This drawing is the copyright of 'Roofing Industries' and can only be copied or reproduced with their permission.
- These details to be read with Roofing Industries profile technical summary regarding wind loads and fixings.
- Further information can be obtained from the NZ Metal Roof & Wall Cladding Code of Practice: www.metalroofing.org.nz OR NZBC clause E2/AS1.

Roofing Industries
roof.co.nz

RESIDENTIAL TRIMRIB® ROOFING
RIDGE AND HIP FLASHING (ROLL TOP)

Detail Number: RI-RTR005A
Date drawn: 07/07/2017
Scale: 1 : 5@ A4

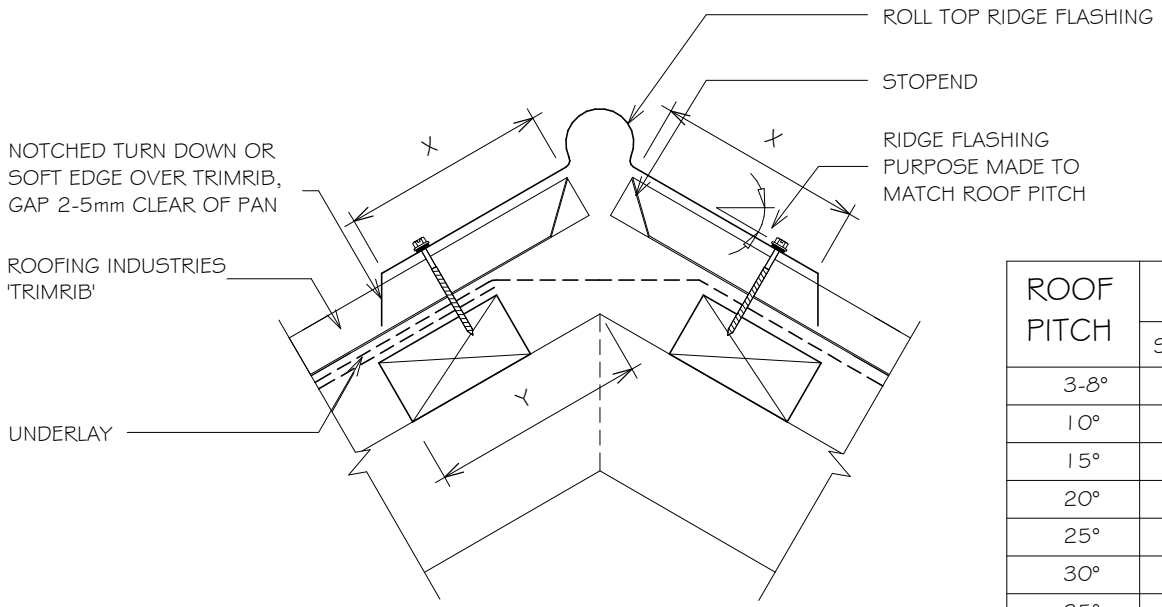

ROOF PITCH	DISTANCE Y mm	
	SITUATION 1	SITUATION 2
3-8°	N/A	218
10°	167	217
15°	162	212
20°	156	206
25°	150	200
30°	143	193
35°	134	184
40°	125	175
45°	115	165

FOR STANDARD 50mm PURLINS ON FLAT

SITE WIND ZONE (As per NZS3604)	MINIMUM mm (X) TRANSVERSE FLASHING OVER ROOFING
SITUATION 1 (1)	130 (3)
SITUATION 2 (2)	200 (3)

NOTES:

1. SITUATION 1: IN LOW, MEDIUM OR HIGH WIND ZONES, WHERE ROOF PITCH IS 10° OR GREATER.
2. SITUATION 2: FOR ALL ROOF PITCHES IN VERY HIGH AND EXTRA HIGH WIND ZONES, FOR ALL WIND ZONES WHERE ROOF PITCH LESS THAN 10°.
3. EXCLUDING ANY SOFT EDGE OR TURN-DOWN TO ROOFING.
4. FOR VENTILATION, BUILDING PAPER MAY REQUIRE SLOTS CUT AT RIDGE LINE. REFER MRM CODE OF PRACTICE.

NOTES:

- These details are generally in compliance with E2/AS1 and/or the NZ Metal Roof & Wall Cladding Code of Practice and in some cases specific details by 'Roofing Industries'.
- The building designer is ultimatley responsible to ensure that details used meet the requirements of the NZ Building Code for the specific project.
- Details of the supporting structure including cavity battens are indicative only and are the responsibility of the building designer. For steel framed buildings thermal break cavity battens may be required.
- Underlay selection and building wrap types are the responsibility of the designer, Netting or other support is generally required at roof pitches less than 8 degrees combined with a self supporting paper. At roof pitches of 8° and above where non self supporting paper is used or purlin spacing is in excess of self supporting criteria, netting or other support should be used. Alternative support to netting should be used in severe coastal environments including when aluminium is used.
- These details are for Roofing Industries profile/s as nominated and may not be applicable to other profiles.
- This drawing is the copyright of 'Roofing Industries' and can only be copied or reproduced with their permission.
- These details to be read with Roofing Industries profile technical summary regarding wind loads and fixings.
- Further information can be obtained from the NZ Metal Roof & Wall Cladding Code of Practice: www.metalroofing.org.nz OR NZBC clause E2/AS1.

Roofing Industries
roof.co.nz

RESIDENTIAL TRIMRIB® ROOFING
RIDGE AND HIP FLASHING (SQUARE TOP)

Detail Number: RI-RTR005B
Date drawn: 07/07/2017
Scale: 1 : 5@ A4

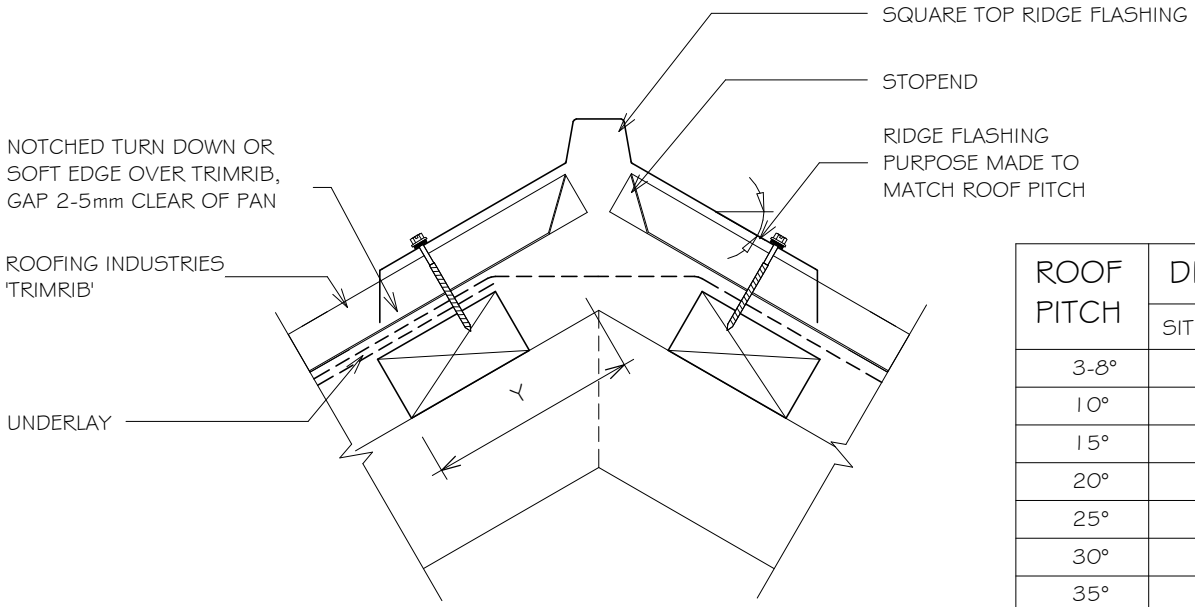

ROOF PITCH	DISTANCE Y mm	
	SITUATION 1	SITUATION 2
3-8°	N/A	218
10°	167	217
15°	162	212
20°	156	206
25°	150	200
30°	143	193
35°	134	184
40°	125	175
45°	115	165

FOR STANDARD 50mm PURLINS ON FLAT

SITE WIND ZONE (As per NZS3604)	MINIMUM mm (X) TRANSVERSE FLASHING OVER ROOFING
SITUATION 1 (1)	130 (3)
SITUATION 2 (2)	200 (3)

NOTES:

1. SITUATION 1: IN LOW, MEDIUM OR HIGH WIND ZONES, WHERE ROOF PITCH IS 10° OR GREATER.
2. SITUATION 2: FOR ALL ROOF PITCHES IN VERY HIGH AND EXTRA HIGH WIND ZONES, FOR ALL WIND ZONES WHERE ROOF PITCH LESS THAN 10°.
3. EXCLUDING ANY SOFT EDGE OR TURN-DOWN TO ROOFING.
4. FOR VENTILATION, BUILDING PAPER MAY REQUIRE SLOTS CUT AT RIDGE LINE. REFER MRM CODE OF PRACTICE.

NOTES:

- These details are generally in compliance with E2/AS1 and/or the NZ Metal Roof & Wall Cladding Code of Practice and in some cases specific details by 'Roofing Industries'.
- The building designer is ultimatley responsible to ensure that details used meet the requirements of the NZ Building Code for the specific project.
- Details of the supporting structure including cavity battens are indicative only and are the responsibility of the building designer. For steel framed buildings thermal break cavity battens may be required.
- Underlay selection and building wrap types are the responsibility of the designer, Netting or other support is generally required at roof pitches less than 8 degrees combined with a self supporting paper. At roof pitches of 8° and above where non self supporting paper is used or purlin spacing is in excess of self supporting criteria, netting or other support should be used. Alternative support to netting should be used in severe coastal environments including when aluminium is used.
- These details are for Roofing Industries profile/s as nominated and may not be applicable to other profiles.
- This drawing is the copyright of 'Roofing Industries' and can only be copied or reproduced with their permission.
- These details to be read with Roofing Industries profile technical summary regarding wind loads and fixings.
- Further information can be obtained from the NZ Metal Roof & Wall Cladding Code of Practice: www.metalroofing.org.nz OR NZBC clause E2/AS1.

Roofing Industries
roof.co.nz

RESIDENTIAL TRIMRIB® ROOFING
VALLEY DETAIL (E2/AS1 COMPLIANCE)

Detail Number: RI-RTR006A
Date drawn: 07/07/2017
Scale: 1 : 5@ A4

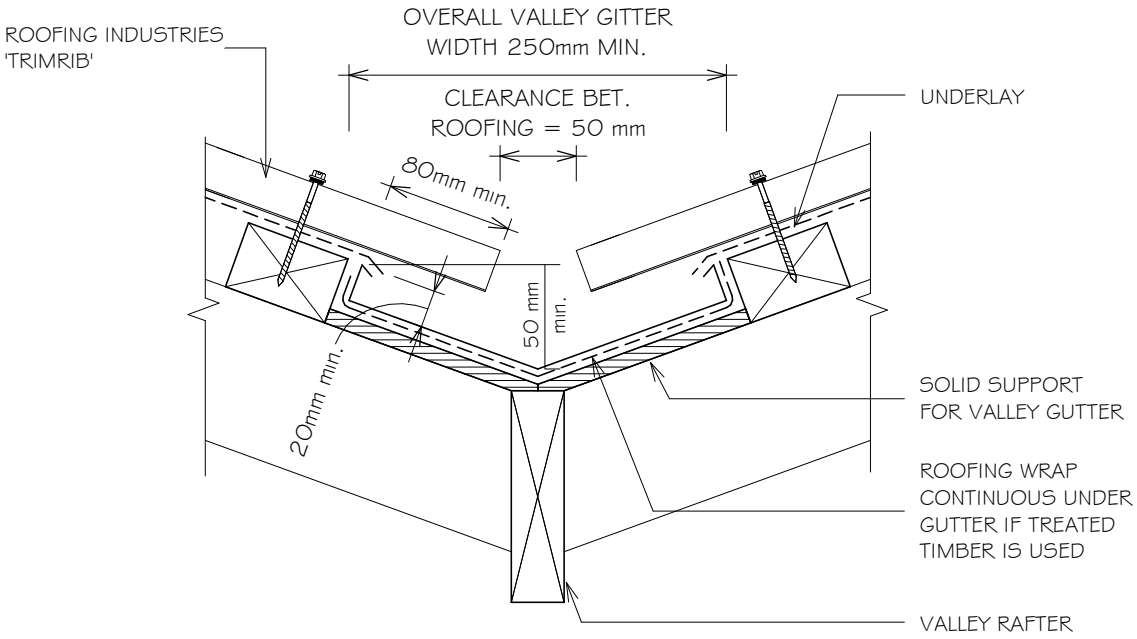

GUTTER WIDTH	MAXIMUM CATCHMENT AREA	MIN ROOF PITCH (4)
250mm	25m2	8°
160mm	16m2	12.5°

NOTES:

1. GUTTERS IN ACCORDANCE WITH NEW ZEALAND BUILDING CODE
2. RAINFALL INTENSITY WITH AVERAGE RECURRENCE INTERVAL (ARI) NO GREATER THAN 200 mm PER HOUR
3. MINIMUM WIDTH OF VALLEY GUTTER MAY REDUCE TO 160mm, PROVIDING ROOF CATCHMENT AREA IS IN ACCORDANCE WITH THE TABLE ABOVE. IN THIS CASE, COVER OF ROOF CLADDING OVER GUTTER SHALL BE REDUCED TO 60 mm TO PROVIDE A CLEARANCE GAP OF 40mm.
4. FOR ROOF PITCHES 8° OR GREATER. FOR LESSOR PITCHES USE INTERNAL GUTTER.

NOTES:

- These details are generally in compliance with E2/AS1 and/or the NZ Metal Roof & Wall Cladding Code of Practice and in some cases specific details by 'Roofing Industries'.
- The building designer is ultimatley responsible to ensure that details used meet the requirements of the NZ Building Code for the specific project.
- Details of the supporting structure including cavity battens are indicative only and are the responsibility of the building designer. For steel framed buildings thermal break cavity battens may be required.
- Underlay selection and building wrap types are the responsibility of the designer, Netting or other support is generally required at roof pitches less than 8 degrees combined with a self supporting paper. At roof pitches of 8° and above where non self supporting paper is used or purlin spacing is in excess of self supporting criteria, netting or other support should be used. Alternative support to netting should be used in severe coastal environments including when aluminium is used.
- These details are for Roofing Industries profile/s as nominated and may not be applicable to other profiles.
- This drawing is the copyright of 'Roofing Industries' and can only be copied or reproduced with their permission.
- These details to be read with Roofing Industries profile technical summary regarding wind loads and fixings.
- Further information can be obtained from the NZ Metal Roof & Wall Cladding Code of Practice: www.metalroofing.org.nz OR NZBC clause E2/AS1.

Roofing Industries
roof.co.nz

RESIDENTIAL TRIMRIB® ROOFING
VALLEY DETAIL (NZ METAL ROOF & WALL CLADDING (CODE OF PRACTICE COMPLIANCE)

Detail Number: RI-RTR006B
Date drawn: 07/07/2017
Scale: 1 : 5@ A4

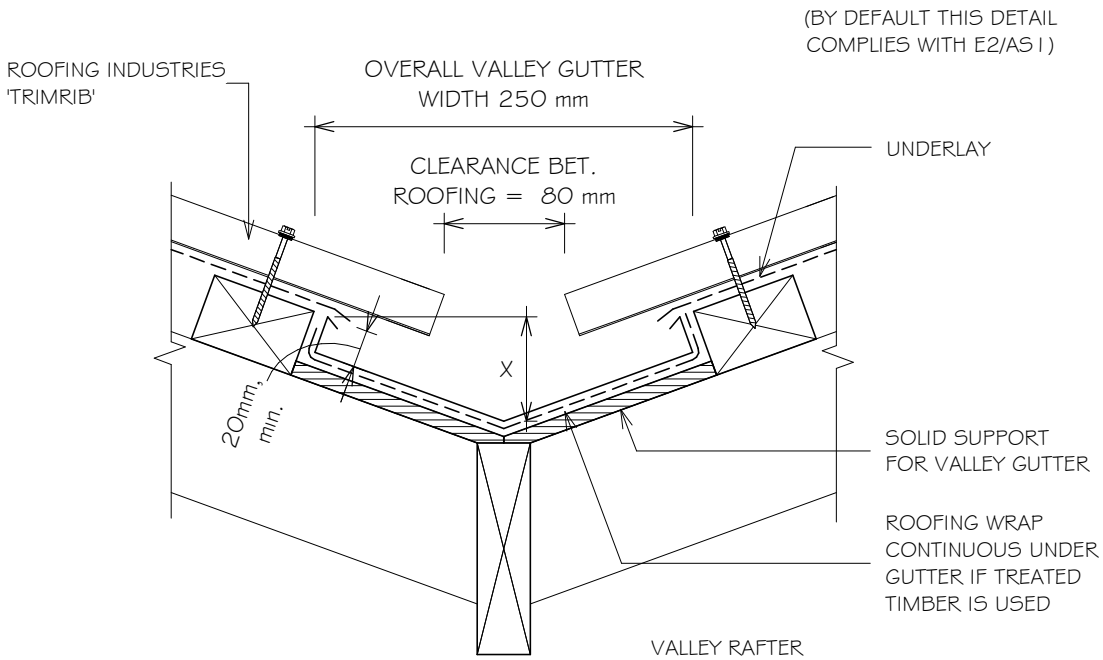

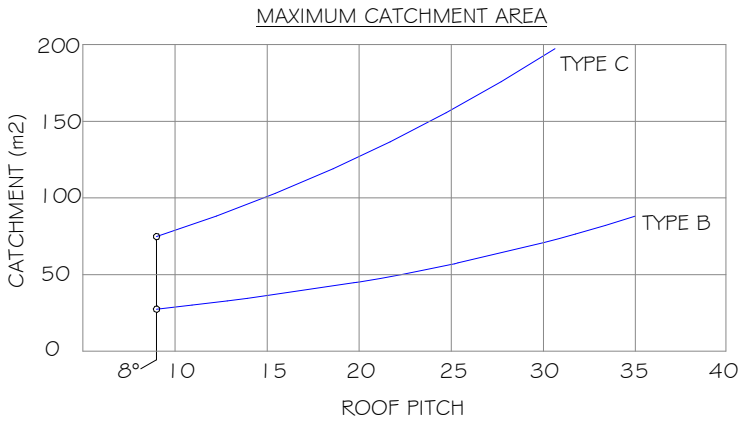

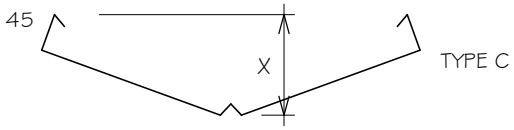

VALLEY DEPTH (X)		
ROOF PITCH	TYPE B	TYPE C
8-12°	75	75
>12-35°	50	70
>35° (1)	50	70

NOTE:
(1) ADDITION OF CENTRAL BAFFLE RECOMMENDED
(2) ROOF PITCHES BELOW 8° REQUIRE AN INTERNAL GUTTER

NOTES:

- These details are generally in compliance with E2/AS1 and/or the NZ Metal Roof & Wall Cladding Code of Practice and in some cases specific details by 'Roofing Industries'.
- The building designer is ultimatley responsible to ensure that details used meet the requirements of the NZ Building Code for the specific project.
- Details of the supporting structure including cavity battens are indicative only and are the responsibility of the building designer. For steel framed buildings thermal break cavity battens may be required.
- Underlay selection and building wrap types are the responsibility of the designer, Netting or other support is generally required at roof pitches less than 8 degrees combined with a self supporting paper. At roof pitches of 8° and above where non self supporting paper is used or purlin spacing is in excess of self supporting criteria, netting or other support should be used. Alternative support to netting should be used in severe coastal environments including when aluminium is used.
- These details are for Roofing Industries profile/s as nominated and may not be applicable to other profiles.
- This drawing is the copyright of 'Roofing Industries' and can only be copied or reproduced with their permission.
- These details to be read with Roofing Industries profile technical summary regarding wind loads and fixings.
- Further information can be obtained from the NZ Metal Roof & Wall Cladding Code of Practice: www.metalroofing.org.nz OR NZBC clause E2/AS1.

Roofing Industries
roof.co.nz

RESIDENTIAL TRIMRIB® ROOFING
INTERNAL GUTTER

Detail Number: RI-RTR007A

Date drawn: 07/07/2017

Scale: 1 : 5@ A4

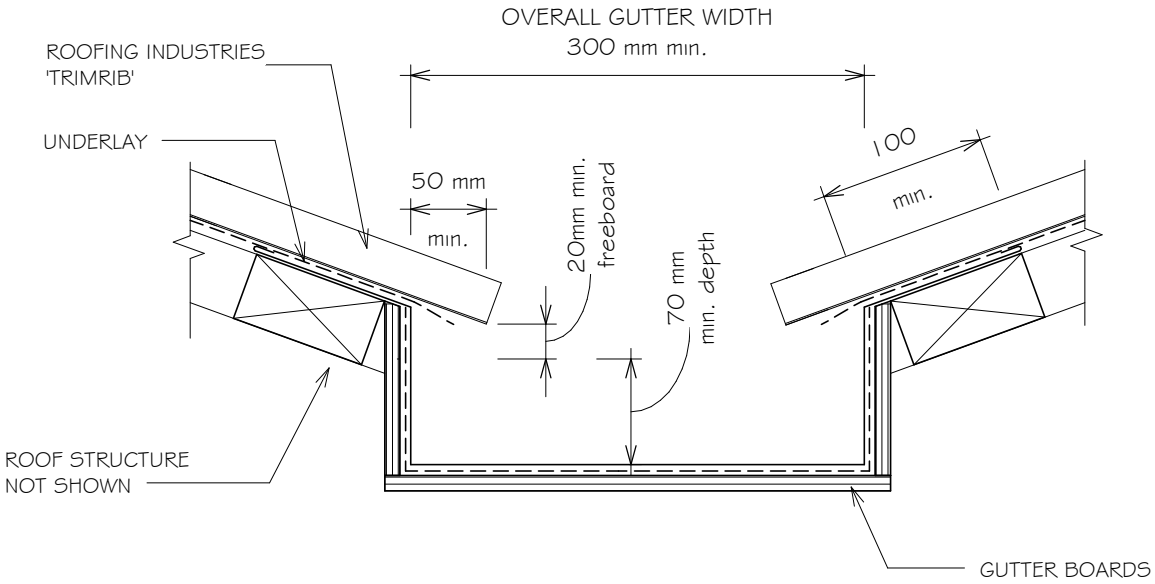

NOTES:

1. GUTTERS INSTALLED OVER ROOF UNDERLAY IF GUTTER BOARDS ARE TREATED TIMBER.
2. INTERNAL GUTTER SHALL BE SIZED TO SUIT THE ROOF CATCHMENT AREA, BUT SHALL BE NO LESS THAN SHOWN IN THIS FIGURE.
3. INTERNAL GUTTER SHOULD BE MADE FROM NONFERROUS METAL'S COMPATIBLE WITH THE ROOFING MATERIAL.
4. GUTTER SIZES TO BE CALCULATED FROM E1/AS1 OR MRM CODE OF PRACTISE.
5. HAVE A MINIMUM SLOPE OF 1:100

NOTES:

- These details are generally in compliance with E2/AS1 and/or the NZ Metal Roof & Wall Cladding Code of Practice and in some cases specific details by 'Roofing Industries'.
- The building designer is ultimatley responsible to ensure that details used meet the requirements of the NZ Building Code for the specific project.
- Details of the supporting structure including cavity battens are indicative only and are the responsibility of the building designer. For steel framed buildings thermal break cavity battens may be required.
- Underlay selection and building wrap types are the responsibility of the designer, Netting or other support is generally required at roof pitches less than 8 degrees combined with a self supporting paper. At roof pitches of 8° and above where non self supporting paper is used or purlin spacing is in excess of self supporting criteria, netting or other support should be used. Alternative support to netting should be used in severe coastal environments including when aluminium is used.
- These details are for Roofing Industries profile/s as nominated and may not be applicable to other profiles.
- This drawing is the copyright of 'Roofing Industries' and can only be copied or reproduced with their permission.
- These details to be read with Roofing Industries profile technical summary regarding wind loads and fixings.
- Further information can be obtained from the NZ Metal Roof & Wall Cladding Code of Practice: www.metalroofing.org.nz OR NZBC clause E2/AS1.

Roofing Industries
roof.co.nz

RESIDENTIAL TRIMRIB® ROOFING
FIXINGS AND SHEET LAP

Detail Number: RI-RTR008A

Date drawn: 07/07/2017

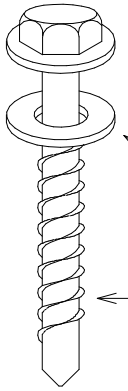

ROOFING
MINIMUM 12 GAUGE 65mm LONG TIMBER TEKSCREW WITH NEO.
(USE 12x55mm STEELTEK FOR STEEL PURLINS)
OR 3.8□ SPIRAL SHANK NAIL HOT DIPPED GALV TO AS/NZS 4680.

NEOPRENE WASHER

CLADDING
MINIMUM 12 GAUGE 30mm LONG TIMBER TEKSCREW WITH NEO.
(USE 12x20mm STEELTEK FOR STEEL FRAMING)
WHERE CAVITY BATTENS USED SCREWS TO PENETRATE STRUCTURAL FRAMING BY A MIN OF 30mm.

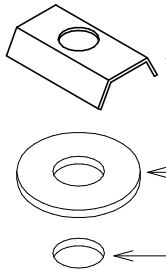

PROFILE WASHER OVER EPDM WASHER

30mm NEOPRENE WASHER

OVERSIZED HOLE IN CREST OF PROFILE

WHERE REQUIRED FOR EXPANSION OR WIND UPLIFT IN ROOFING APPLICATION

TYPE OF FIXING
'TRIMRIB'
METAL ROOFING

LINE OF SITE AND PREVAILING WEATHER DIRECTION RELATIVE TO LAPS WHERE PRACTICABLE

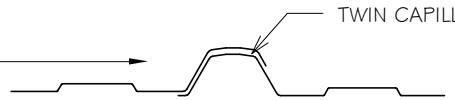

TWIN CAPILLARY BREAKS

CORRECT WAY TO LAP SHEETS
1:5

'TRIMRIB' SPACING OF FIXINGS

APPLICATION	RIDGE, HIP, VALLEY, AND GUTTER LINE. PERIPHERY ROOF AREAS	(3) REMAINDER OF ROOF
'TRIMRIB' ROOFING	FIX SIDE LAPS AND FIX EVERY CREST	REFER www.roof.co.nz
'TRIMRIB' WALL CLADDING	1 FIXING PER PAN ADJACENT TO EVERY SIDE LAP AND EVERY PAN.	

NOTE:
1. SCREW FIXING IS RECOMMENDED FOR 'TRIMRIB' PROFILES
2. AS THERE IS LESS LIKELIHOOD OF THE FIXING 'BACKING OUT' THAN WITH A NAIL.
3. FIXINGS ARE FOR STEEL BASED MATERIALS. FOR OTHER SUBSTRATES REFER TO 'TRIMRIB' PROFILE TECHNICAL SUMMARY.
4. FOR WIND & CONCENTRATED LOAD SPAN DESIGN GRAPHS FOR OPTIONAL FIXING SELECTION & PATTERNS REFER TO 'TRIMRIB' PROFILE TECHNICAL SUMMARY ON www.roof.co.nz

NOTES:

- These details are generally in compliance with E2/AS1 and/or the NZ Metal Roof & Wall Cladding Code of Practice and in some cases specific details by 'Roofing Industries'.
- The building designer is ultimatley responsible to ensure that details used meet the requirements of the NZ Building Code for the specific project.
- Details of the supporting structure including cavity battens are indicative only and are the responsibility of the building designer. For steel framed buildings thermal break cavity battens may be required.
- Underlay selection and building wrap types are the responsibility of the designer, Netting or other support is generally required at roof pitches less than 8 degrees combined with a self supporting paper. At roof pitches of 8° and above where non self supporting paper is used or purlin spacing is in excess of self supporting criteria, netting or other support should be used. Alternative support to netting should be used in severe coastal environments including when aluminium is used.
- These details are for Roofing Industries profile/s as nominated and may not be applicable to other profiles.
- This drawing is the copyright of 'Roofing Industries' and can only be copied or reproduced with their permission.
- These details to be read with Roofing Industries profile technical summary regarding wind loads and fixings.
- Further information can be obtained from the NZ Metal Roof & Wall Cladding Code of Practice: www.metalroofing.org.nz OR NZBC clause E2/AS1.

Roofing Industries
roof.co.nz

RESIDENTIAL TRIMRIB® ROOFING
RIDGE - HIP FLASHING DETAIL

Detail Number: RI-RTR009A

Date drawn: 07/07/2017

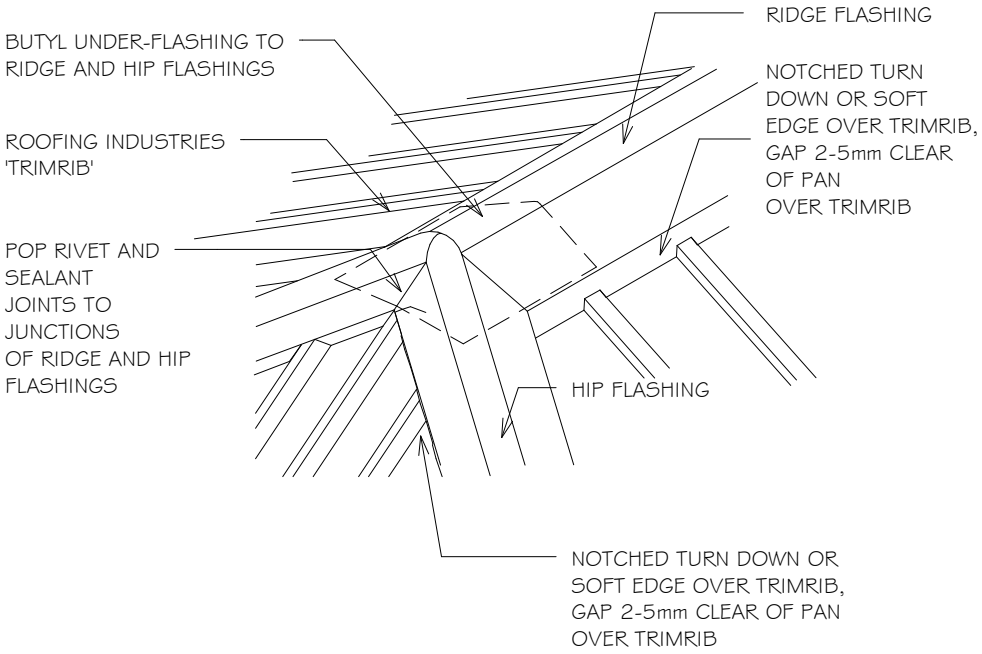

SITE WIND ZONE (As per NZS3604)	REFER 'X' VALUE DETAIL RCR005A & B TRANSVERSE FLASHING OVER ROOFING
SITUATION 1 (1)	130 (3)
SITUATION 2 (2)	200 (3)

NOTES:

FLASHING COVER VARIES (REFER TO TABLE FOR RIDGE/HIP - TRANSVERSE FLASHING OVER ROOFING)

1. SITUATION 1: IN LOW, MEDIUM OR HIGH WIND ZONES, WHERE ROOF PITCH IS 10° OR GREATER (X VALUE)
2. SITUATION 2: FOR ALL ROOF PITCHES IN VERY HIGH OR EXTRA HIGH WIND ZONES, FOR ALL WIND ZONES WHERE ROOF PITCH IS LESS THAN 10° (X VALUE)
3. FOR OTHER RIDGE TO HIP FLASHINGS REFER TO NEW ZEALAND METAL ROOF & WALL CLADDING CODE OF PRACTICE.

NOTES:

- These details are generally in compliance with E2/AS1 and/or the NZ Metal Roof & Wall Cladding Code of Practice and in some cases specific details by 'Roofing Industries'.
- The building designer is ultimatley responsible to ensure that details used meet the requirements of the NZ Building Code for the specific project.
- Details of the supporting structure including cavity battens are indicative only and are the responsibility of the building designer. For steel framed buildings thermal break cavity battens may be required.
- Underlay selection and building wrap types are the responsibility of the designer, Netting or other support is generally required at roof pitches less than 8 degrees combined with a self supporting paper. At roof pitches of 8° and above where non self supporting paper is used or purlin spacing is in excess of self supporting criteria, netting or other support should be used. Alternative support to netting should be used in severe coastal environments including when aluminium is used.
- These details are for Roofing Industries profile/s as nominated and may not be applicable to other profiles.
- This drawing is the copyright of 'Roofing Industries' and can only be copied or reproduced with their permission.
- These details to be read with Roofing Industries profile technical summary regarding wind loads and fixings.
- Further information can be obtained from the NZ Metal Roof & Wall Cladding Code of Practice: www.metalroofing.org.nz OR NZBC clause E2/AS1.

Roofing Industries
roof.co.nz

RESIDENTIAL TRIMRIB® ROOFING
PARALLEL APRON FLASHING (NON CAVITY)

Detail Number: RI-RTR010A
Date drawn: 07/07/2017
Scale: 1 : 5@ A4

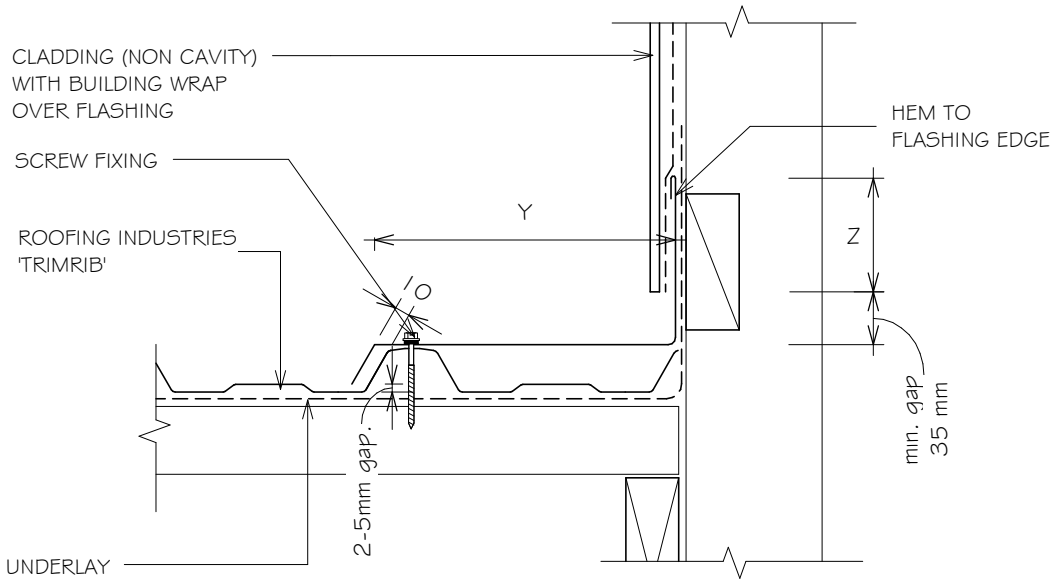

SITE WIND ZONE (As per NZS3604)	MINIMUM	
	Z	Y
SITUATION 1 (1)	75mm	2 crests
SITUATION 2 (2)	100mm	2 "

NOTES:

DESIGNER TO ENSURE DURABILITY OF FLASHING MATERIAL;

1. SITUATION 1: IN LOW, MEDIUM OR HIGH WIND ZONES, WHERE ROOF PITCH IS 10° OR GREATER.
2. SITUATION 2: FOR ALL ROOF PITCHES IN VERY HIGH & EXTRA HIGH WIND ZONES, FOR ALL WIND ZONES WHERE ROOF PITCH IS LESS THAN 10°.
3. CAVITY BATTENS OR PACKERS CONTAINING CORROSIVE MATERIAL MUST BE SEPARATED FROM METAL CLADDING BY DPC, BUILDING WRAP, PVC OR PAINTING

NOTES:

- These details are generally in compliance with E2/AS1 and/or the NZ Metal Roof & Wall Cladding Code of Practice and in some cases specific details by 'Roofing Industries'.
- The building designer is ultimatley responsible to ensure that details used meet the requirements of the NZ Building Code for the specific project.
- Details of the supporting structure including cavity battens are indicative only and are the responsibility of the building designer. For steel framed buildings thermal break cavity battens may be required.
- Underlay selection and building wrap types are the responsibility of the designer, Netting or other support is generally required at roof pitches less than 8 degrees combined with a self supporting paper. At roof pitches of 8° and above where non self supporting paper is used or purlin spacing is in excess of self supporting criteria, netting or other support should be used. Alternative support to netting should be used in severe coastal environments including when aluminium is used.
- These details are for Roofing Industries profile/s as nominated and may not be applicable to other profiles.
- This drawing is the copyright of 'Roofing Industries' and can only be copied or reproduced with their permission.
- These details to be read with Roofing Industries profile technical summary regarding wind loads and fixings.
- Further information can be obtained from the NZ Metal Roof & Wall Cladding Code of Practice: www.metalroofing.org.nz OR NZBC clause E2/AS1.

Roofing Industries
roof.co.nz

RESIDENTIAL TRIMRIB® ROOFING
PARALLEL APRON FLASHING (CAVITY)

Detail Number: RI-RTR010B
Date drawn: 07/07/2017
Scale: 1 : 5@ A4

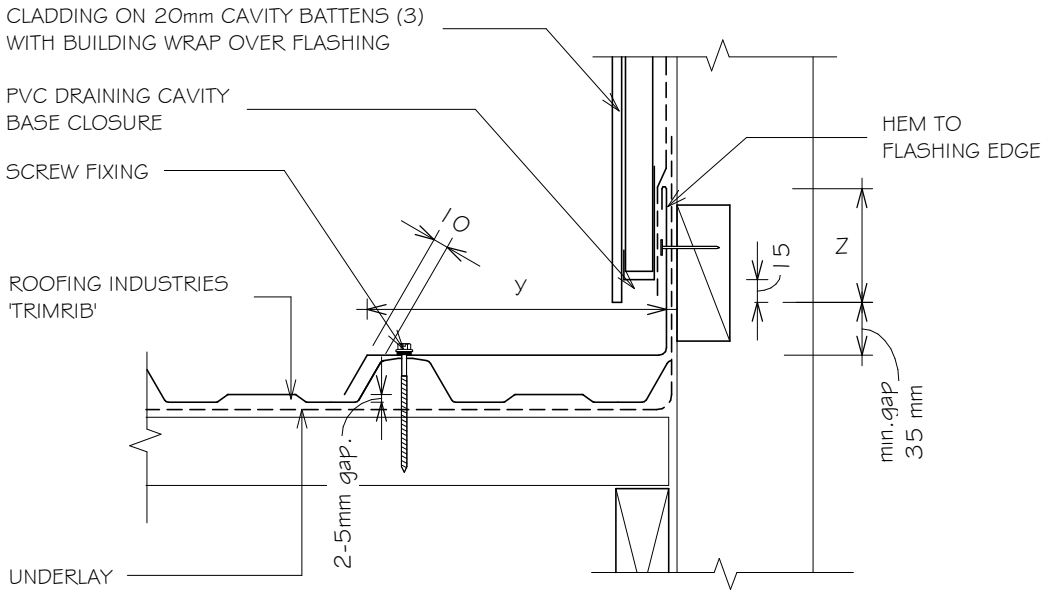

SITE WIND ZONE (As per NZS3604)	MINIMUM	
	Z	Y
SITUATION 1 (1)	75mm	2 crests
SITUATION 2 (2)	100mm	2 "

NOTES:

DESIGNER TO ENSURE DURABILITY OF FLASHING MATERIAL;

1. SITUATION 1: IN LOW, MEDIUM OR HIGH WIND ZONES, WHERE ROOF PITCH IS 10° OR GREATER
2. SITUATION 2: FOR ALL ROOF PITCHES IN VERY HIGH AND EXTRA HIGH WIND ZONES, FOR ALL WIND ZONES WHERE ROOF PITCH IS LESS THAN 10°.
3. CAVITY BATTENS OR PACKERS CONTAINING CORROSIVE MATERIAL MUST BE SEPARATED FROM METAL CLADDING BY DPC, BUILDING WRAP, PVC OR PAINTING

NOTES:

- These details are generally in compliance with E2/AS1 and/or the NZ Metal Roof & Wall Cladding Code of Practice and in some cases specific details by 'Roofing Industries'.
- The building designer is ultimatley responsible to ensure that details used meet the requirements of the NZ Building Code for the specific project.
- Details of the supporting structure including cavity battens are indicative only and are the responsibility of the building designer. For steel framed buildings thermal break cavity battens may be required.
- Underlay selection and building wrap types are the responsibility of the designer, Netting or other support is generally required at roof pitches less than 8 degrees combined with a self supporting paper. At roof pitches of 8° and above where non self supporting paper is used or purlin spacing is in excess of self supporting criteria, netting or other support should be used. Alternative support to netting should be used in severe coastal environments including when aluminium is used.
- These details are for Roofing Industries profile/s as nominated and may not be applicable to other profiles.
- This drawing is the copyright of 'Roofing Industries' and can only be copied or reproduced with their permission.
- These details to be read with Roofing Industries profile technical summary regarding wind loads and fixings.
- Further information can be obtained from the NZ Metal Roof & Wall Cladding Code of Practice: www.metalroofing.org.nz OR NZBC clause E2/AS1.

Roofing Industries
roof.co.nz

RESIDENTIAL TRIMRIB® ROOFING PARALLEL APRON FLASHING (HORIZ TRIMRIB ON CAVITY)

Detail Number: RI-RTR010C
Date drawn: 07/07/2017
Scale: 1 : 5@ A4

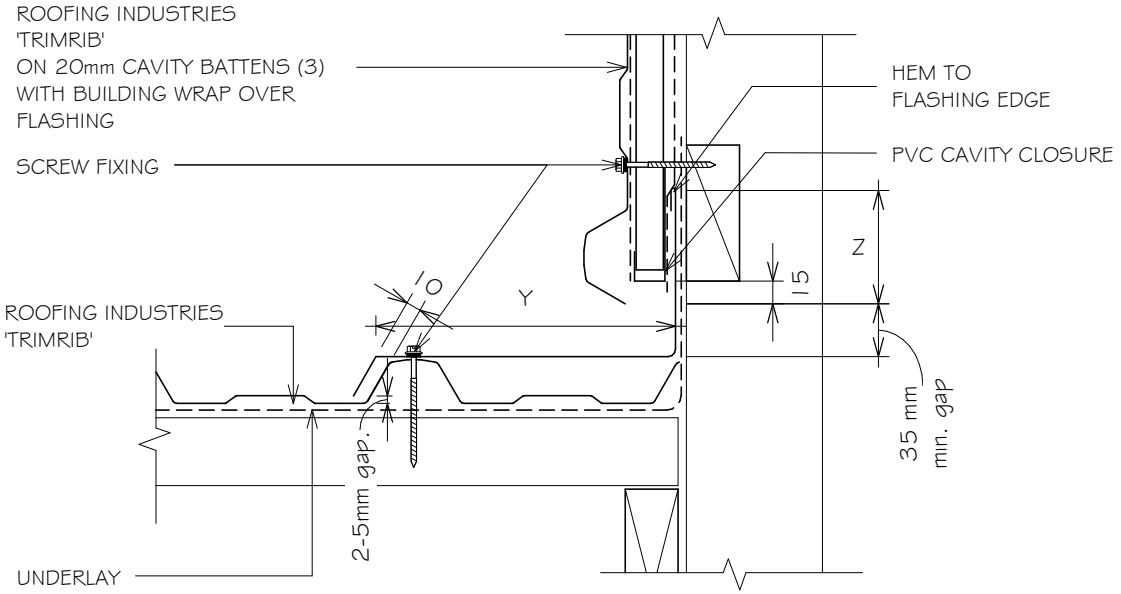

SITE WIND ZONE (As per NZS3604)	MINIMUM	
	Z	Y
SITUATION 1 (1)	75mm	2 crests
SITUATION 2 (2)	100mm	2 "

NOTES:

DESIGNER TO ENSURE DURABILITY OF FLASHING MATERIAL;

1. SITUATION 1: IN LOW, MEDIUM OR HIGH WIND ZONES, WHERE ROOF PITCH IS 10° OR GREATER
2. SITUATION 2: FOR ALL ROOF PITCHES IN VERY HIGH AND EXTRA HIGH WIND ZONES, FOR ALL WIND ZONES WHERE ROOF PITCH IS LESS THAN 10°.
3. CAVITY BATTENS OR PACKERS CONTAINING CORROSIVE MATERIAL MUST BE SEPARATED FROM METAL CLADDING BY DPC, BUILDING WRAP, PVC OR PAINTING

NOTES:

- These details are generally in compliance with E2/AS1 and/or the NZ Metal Roof & Wall Cladding Code of Practice and in some cases specific details by 'Roofing Industries'.
- The building designer is ultimatley responsible to ensure that details used meet the requirements of the NZ Building Code for the specific project.
- Details of the supporting structure including cavity battens are indicative only and are the responsibility of the building designer. For steel framed buildings thermal break cavity battens may be required.
- Underlay selection and building wrap types are the responsibility of the designer, Netting or other support is generally required at roof pitches less than 8 degrees combined with a self supporting paper. At roof pitches of 8° and above where non self supporting paper is used or purlin spacing is in excess of self supporting criteria, netting or other support should be used. Alternative support to netting should be used in severe coastal environments including when aluminium is used.
- These details are for Roofing Industries profile/s as nominated and may not be applicable to other profiles.
- This drawing is the copyright of 'Roofing Industries' and can only be copied or reproduced with their permission.
- These details to be read with Roofing Industries profile technical summary regarding wind loads and fixings.
- Further information can be obtained from the NZ Metal Roof & Wall Cladding Code of Practice: www.metalroofing.org.nz OR NZBC clause E2/AS1.

Roofing Industries
roof.co.nz

RESIDENTIAL TRIMRIB® ROOFING
PARALLEL APRON 2 PIECE FLASHING (CAVITY)

Detail Number: RI-RTR010D
Date drawn: 07/07/2017
Scale: 1 : 5@ A4

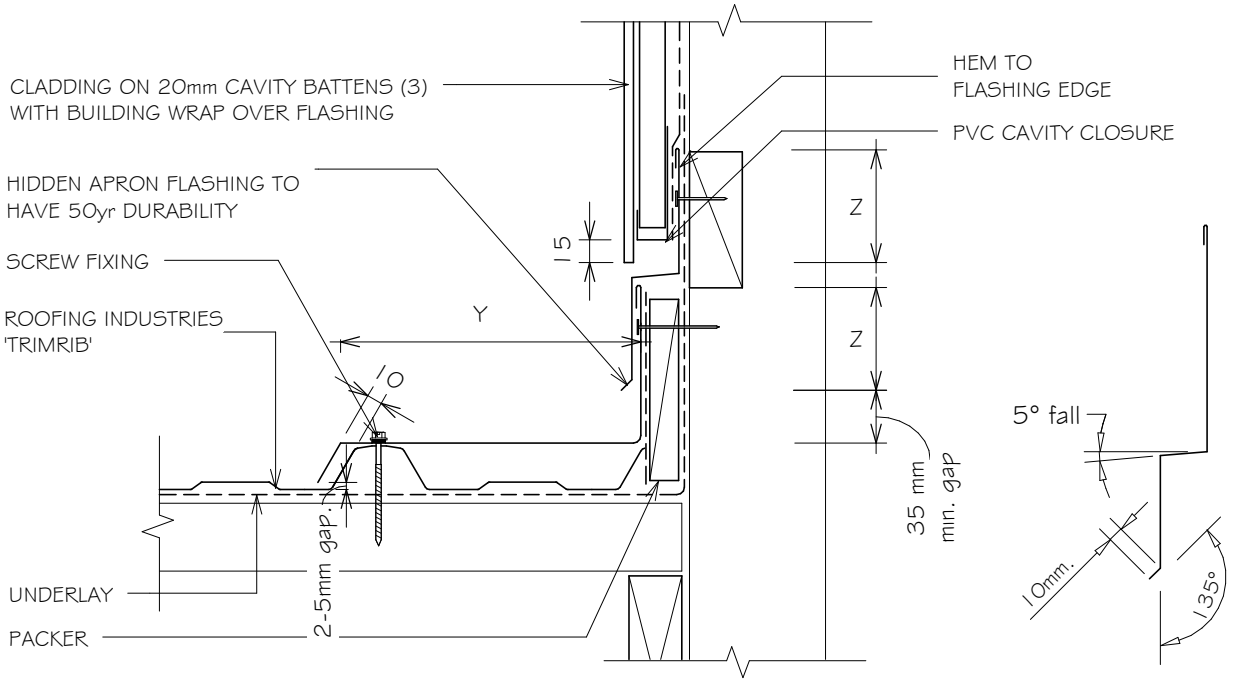

SITE WIND ZONE (As per NZS3604)	MINIMUM	
	Z	Y
SITUATION 1 (1)	75mm	2 crests
SITUATION 2 (2)	100mm	2 "

NOTES:

DESIGNER TO ENSURE DURABILITY OF FLASHING MATERIAL;

1. SITUATION 1: IN LOW, MEDIUM OR HIGH WIND ZONES, WHERE ROOF PITCH IS 10° OR GREATER
2. SITUATION 2: FOR ALL ROOF PITCHES IN VERY HIGH AND EXTRA HIGH WIND ZONES, FOR ALL WIND ZONES WHERE ROOF PITCH IS LESS THAN 10°.
3. CAVITY BATTENS OR PACKERS CONTAINING CORROSIVE MATERIAL MUST BE SEPARATED FROM METAL CLADDING BY DPC, BUILDING WRAP, PVC OR PAINTING

NOTES:

- These details are generally in compliance with E2/AS1 and/or the NZ Metal Roof & Wall Cladding Code of Practice and in some cases specific details by 'Roofing Industries'.
- The building designer is ultimatley responsible to ensure that details used meet the requirements of the NZ Building Code for the specific project.
- Details of the supporting structure including cavity battens are indicative only and are the responsibility of the building designer. For steel framed buildings thermal break cavity battens may be required.
- Underlay selection and building wrap types are the responsibility of the designer, Netting or other support is generally required at roof pitches less than 8 degrees combined with a self supporting paper. At roof pitches of 8° and above where non self supporting paper is used or purlin spacing is in excess of self supporting criteria, netting or other support should be used. Alternative support to netting should be used in severe coastal environments including when aluminium is used.
- These details are for Roofing Industries profile/s as nominated and may not be applicable to other profiles.
- This drawing is the copyright of 'Roofing Industries' and can only be copied or reproduced with their permission.
- These details to be read with Roofing Industries profile technical summary regarding wind loads and fixings.
- Further information can be obtained from the NZ Metal Roof & Wall Cladding Code of Practice: www.metalroofing.org.nz OR NZBC clause E2/AS1.

Roofing Industries
roof.co.nz

RESIDENTIAL TRIMRIB® ROOFING
APRON FLASHING (NON CAVITY)

Detail Number: RI-RTR011A
Date drawn: 07/07/2017
Scale: 1 : 5@ A4

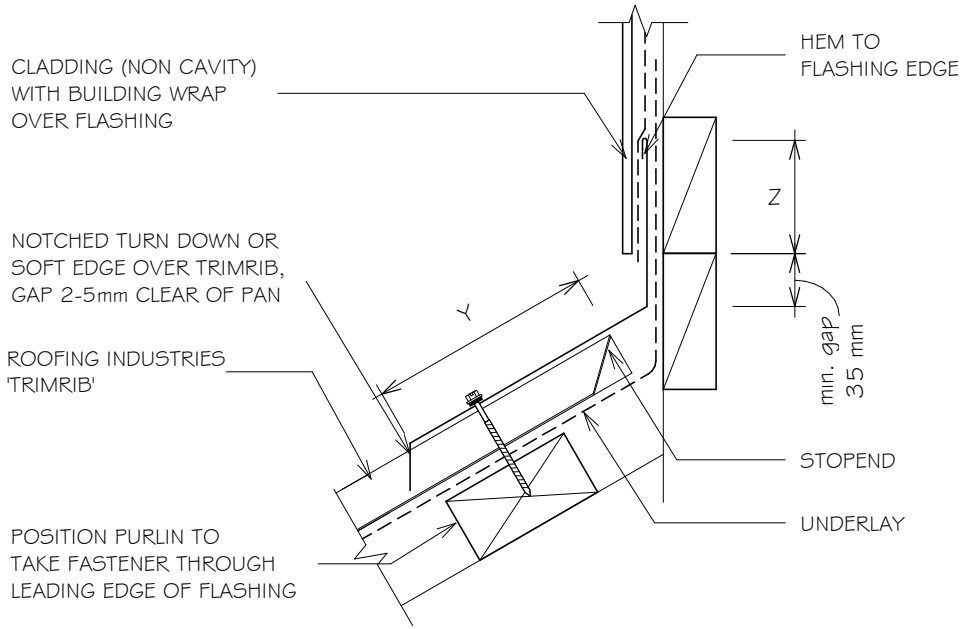

SITE WIND ZONE (As per NZS3604)	MINIMUM mm	
	Z	Y
SITUATION 1 (1)	75	150 (3)
SITUATION 2 (2)	100	200 (3)

NOTES:

DESIGNER TO ENSURE DURABILITY OF FLASHING MATERIAL;

1. SITUATION 1: IN LOW, MEDIUM OR HIGH WIND ZONES, WHERE ROOF PITCH IS 10° OR GREATER
2. SITUATION 2: FOR ALL ROOF PITCHES IN VERY HIGH AND EXTRA HIGH WIND ZONES, FOR ALL WIND ZONES WHERE ROOF PITCH IS LESS THAN 10°.
3. CAVITY BATTENS OR PACKERS CONTAINING CORROSIVE MATERIAL MUST BE SEPARATED FROM METAL CLADDING BY DPC, BUILDING WRAP, PVC OR PAINTING

NOTES:

- These details are generally in compliance with E2/AS1 and/or the NZ Metal Roof & Wall Cladding Code of Practice and in some cases specific details by 'Roofing Industries'.
- The building designer is ultimatley responsible to ensure that details used meet the requirements of the NZ Building Code for the specific project.
- Details of the supporting structure including cavity battens are indicative only and are the responsibility of the building designer. For steel framed buildings thermal break cavity battens may be required.
- Underlay selection and building wrap types are the responsibility of the designer, Netting or other support is generally required at roof pitches less than 8 degrees combined with a self supporting paper. At roof pitches of 8° and above where non self supporting paper is used or purlin spacing is in excess of self supporting criteria, netting or other support should be used. Alternative support to netting should be used in severe coastal environments including when aluminium is used.
- These details are for Roofing Industries profile/s as nominated and may not be applicable to other profiles.
- This drawing is the copyright of 'Roofing Industries' and can only be copied or reproduced with their permission.
- These details to be read with Roofing Industries profile technical summary regarding wind loads and fixings.
- Further information can be obtained from the NZ Metal Roof & Wall Cladding Code of Practice: www.metalroofing.org.nz OR NZBC clause E2/AS1.

Roofing Industries
roof.co.nz

RESIDENTIAL TRIMRIB® ROOFING
APRON FLASHING (CAVITY)

Detail Number: RI-RTR011B
Date drawn: 07/07/2017
Scale: 1 : 5@ A4

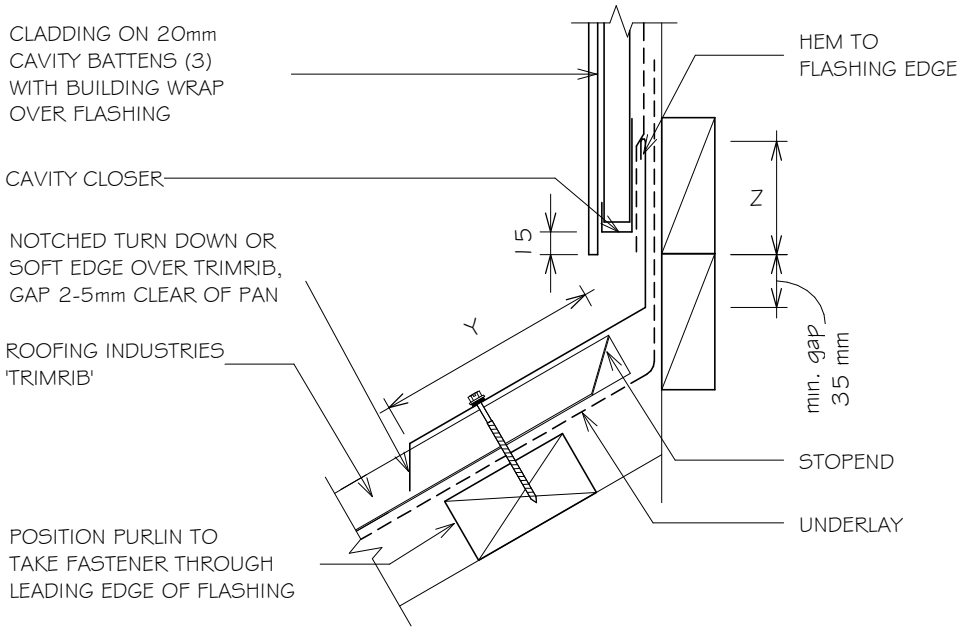

SITE WIND ZONE (As per NZS3604)	MINIMUM mm	
	Z	Y
SITUATION 1 (1)	75	150 (4)
SITUATION 2 (2)	100	200 (4)

NOTES:

DESIGNER TO ENSURE DURABILITY OF FLASHING MATERIAL;

1. SITUATION 1: IN LOW, MEDIUM OR HIGH WIND ZONES, WHERE ROOF PITCH IS 10° OR GREATER
2. SITUATION 2: FOR ALL ROOF PITCHES IN VERY HIGH AND EXTRA HIGH WIND ZONES, FOR ALL WIND ZONES WHERE ROOF PITCH IS LESS THAN 10°.
3. CAVITY BATTENS OR PACKERS CONTAINING CORROSIVE MATERIAL MUST BE SEPARATED FROM METAL CLADDING BY DPC, BUILDING WRAP, PVC OR PAINTING
4. EXCLUDING ANY SOFT EDGE OR TURN-DOWN TO ROOFING

NOTES:

- These details are generally in compliance with E2/AS1 and/or the NZ Metal Roof & Wall Cladding Code of Practice and in some cases specific details by 'Roofing Industries'.
- The building designer is ultimatley responsible to ensure that details used meet the requirements of the NZ Building Code for the specific project.
- Details of the supporting structure including cavity battens are indicative only and are the responsibility of the building designer. For steel framed buildings thermal break cavity battens may be required.
- Underlay selection and building wrap types are the responsibility of the designer, Netting or other support is generally required at roof pitches less than 8 degrees combined with a self supporting paper. At roof pitches of 8° and above where non self supporting paper is used or purlin spacing is in excess of self supporting criteria, netting or other support should be used. Alternative support to netting should be used in severe coastal environments including when aluminium is used.
- These details are for Roofing Industries profile/s as nominated and may not be applicable to other profiles.
- This drawing is the copyright of 'Roofing Industries' and can only be copied or reproduced with their permission.
- These details to be read with Roofing Industries profile technical summary regarding wind loads and fixings.
- Further information can be obtained from the NZ Metal Roof & Wall Cladding Code of Practice: www.metalroofing.org.nz OR NZBC clause E2/AS1.

Roofing Industries
roof.co.nz

RESIDENTIAL TRIMRIB® ROOFING
APRON FLASHING (HORIZ TRIMRIB ON CAVITY)

Detail Number: RI-RTR011C
Date drawn: 07/07/2017
Scale: 1 : 5@ A4

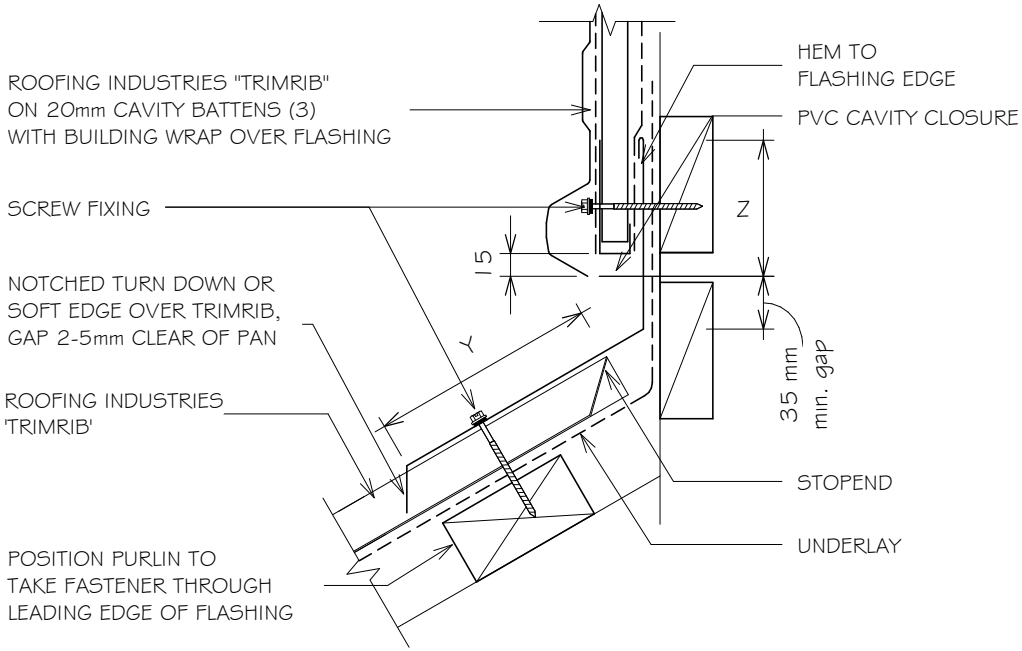

SITE WIND ZONE (As per NZS3604)	MINIMUM mm	
	Z	Y
SITUATION 1 (1)	75	150 (4)
SITUATION 2 (2)	100	200 (4)

NOTES:

DESIGNER TO ENSURE DURABILITY OF FLASHING MATERIAL;

1. SITUATION 1: IN LOW, MEDIUM OR HIGH WIND ZONES, WHERE ROOF PITCH IS 10° OR GREATER
2. SITUATION 2: FOR ALL ROOF PITCHES IN VERY HIGH AND EXTRA HIGH WIND ZONES, FOR ALL WIND ZONES WHERE ROOF PITCH IS LESS THAN 10°.
3. CAVITY BATTENS OR PACKERS CONTAINING CORROSIVE MATERIAL MUST BE SEPARATED FROM METAL CLADDING BY DPC, BUILDING WRAP, PVC OR PAINTING
4. EXCLUDING ANY SOFT EDGE OR TURN-DOWN TO ROOFING

NOTES:

- These details are generally in compliance with E2/AS1 and/or the NZ Metal Roof & Wall Cladding Code of Practice and in some cases specific details by 'Roofing Industries'.
- The building designer is ultimatley responsible to ensure that details used meet the requirements of the NZ Building Code for the specific project.
- Details of the supporting structure including cavity battens are indicative only and are the responsibility of the building designer. For steel framed buildings thermal break cavity battens may be required.
- Underlay selection and building wrap types are the responsibility of the designer, Netting or other support is generally required at roof pitches less than 8 degrees combined with a self supporting paper. At roof pitches of 8° and above where non self supporting paper is used or purlin spacing is in excess of self supporting criteria, netting or other support should be used. Alternative support to netting should be used in severe coastal environments including when aluminium is used.
- These details are for Roofing Industries profile/s as nominated and may not be applicable to other profiles.
- This drawing is the copyright of 'Roofing Industries' and can only be copied or reproduced with their permission.
- These details to be read with Roofing Industries profile technical summary regarding wind loads and fixings.
- Further information can be obtained from the NZ Metal Roof & Wall Cladding Code of Practice: www.metalroofing.org.nz OR NZBC clause E2/AS1.

Roofing Industries
roof.co.nz

RESIDENTIAL TRIMRIB® ROOFING
APRON 2 PIECE FLASHING (CAVITY)

Detail Number: RI-RTR011D
Date drawn: 07/07/2017
Scale: 1 : 5@ A4

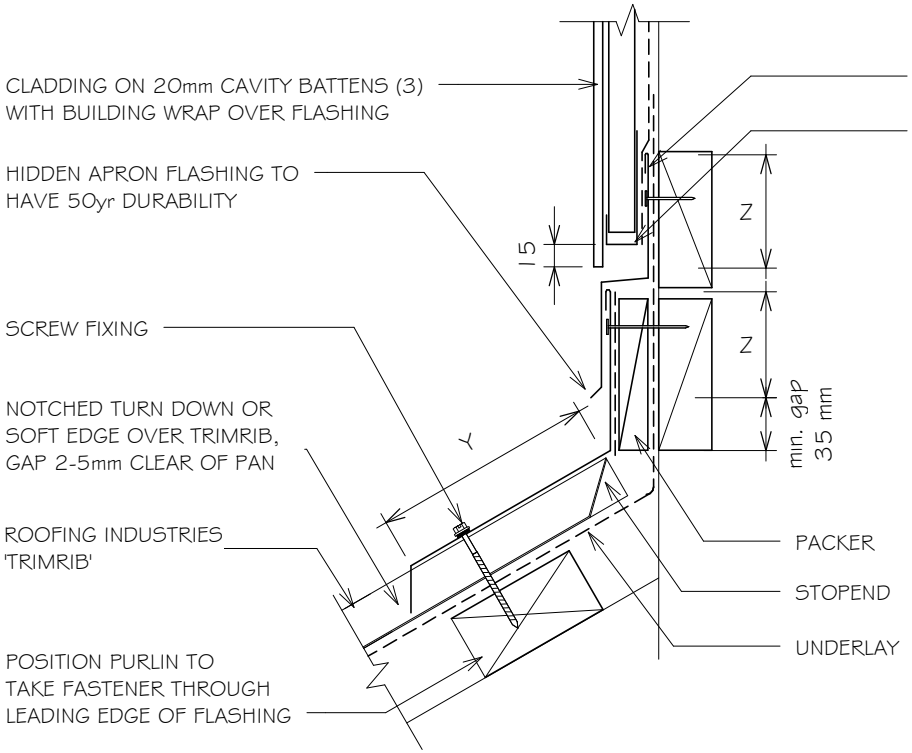

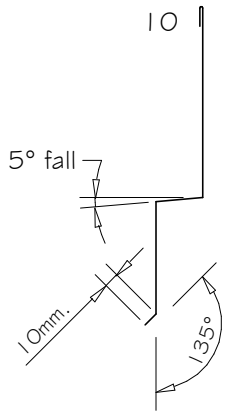

SITE WIND ZONE (As per NZS3604)	MINIMUM	
	Z	Y
SITUATION 1 (1)	75mm	150 (4)
SITUATION 2 (2)	100mm	200 (4)

NOTES:

DESIGNER TO ENSURE DURABILITY OF FLASHING MATERIAL;

1. SITUATION 1: IN LOW, MEDIUM OR HIGH WIND ZONES, WHERE ROOF PITCH IS 10° OR GREATER
2. SITUATION 2: FOR ALL ROOF PITCHES IN VERY HIGH AND EXTRA HIGH WIND ZONES, FOR ALL WIND ZONES WHERE ROOF PITCH IS LESS THAN 10°.
3. CAVITY BATTENS OR PACKERS CONTAINING CORROSIVE MATERIAL MUST BE SEPARATED FROM METAL CLADDING BY DPC, BUILDING WRAP, PVC OR PAINTING
4. EXCLUDING ANY SOFT EDGE OR TURN-DOWN TO ROOFING

NOTES:

- These details are generally in compliance with E2/AS1 and/or the NZ Metal Roof & Wall Cladding Code of Practice and in some cases specific details by 'Roofing Industries'.
- The building designer is ultimatley responsible to ensure that details used meet the requirements of the NZ Building Code for the specific project.
- Details of the supporting structure including cavity battens are indicative only and are the responsibility of the building designer. For steel framed buildings thermal break cavity battens may be required.
- Underlay selection and building wrap types are the responsibility of the designer, Netting or other support is generally required at roof pitches less than 8 degrees combined with a self supporting paper. At roof pitches of 8° and above where non self supporting paper is used or purlin spacing is in excess of self supporting criteria, netting or other support should be used. Alternative support to netting should be used in severe coastal environments including when aluminium is used.
- These details are for Roofing Industries profile/s as nominated and may not be applicable to other profiles.
- This drawing is the copyright of 'Roofing Industries' and can only be copied or reproduced with their permission.
- These details to be read with Roofing Industries profile technical summary regarding wind loads and fixings.
- Further information can be obtained from the NZ Metal Roof & Wall Cladding Code of Practice: www.metalroofing.org.nz OR NZBC clause E2/AS1.

Roofing Industries
roof.co.nz

RESIDENTIAL TRIMRIB® ROOFING
PARALLEL HIDDEN OR OBTUSE GUTTER (NON CAVITY)

Detail Number: RI-RTR012A
Date drawn: 07/07/2017
Scale: 1 : 5@ A4

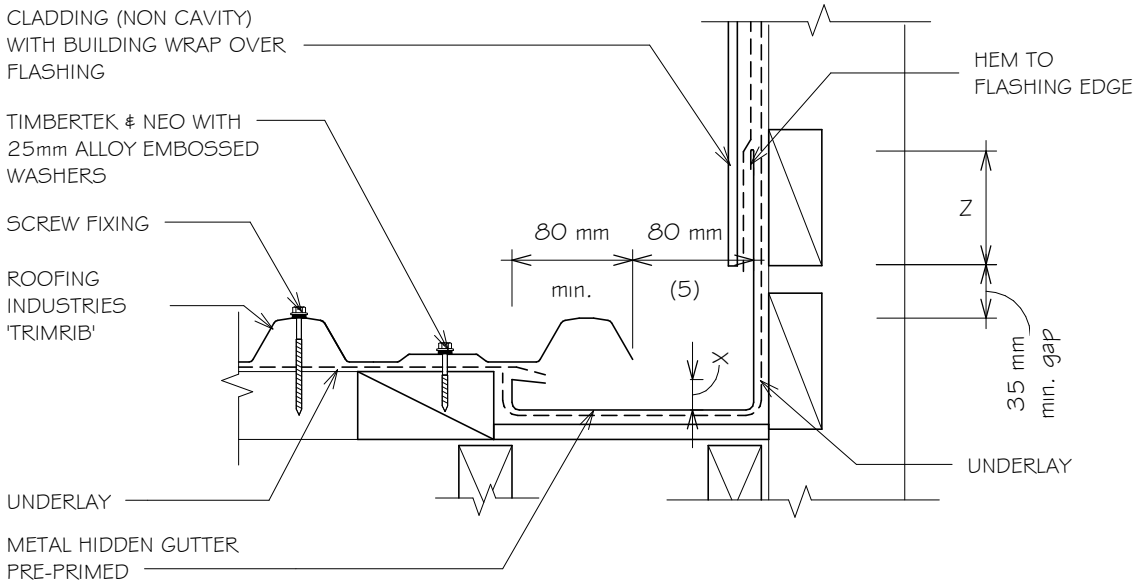

SITE WIND ZONE (As per NZS3604)	MINIMUM Z	GUTTER DEPTH ROOF PITCH	(5) X MIN
SITUATION 1 (1)	75	< 12°	45
SITUATION 2 (2)	100	12° or greater	20

NOTES:

DESIGNER TO ENSURE DURABILITY OF FLASHING MATERIAL;

1. SITUATION 1: IN LOW, MEDIUM OR HIGH WIND ZONES, WHERE ROOF PITCH IS 10° OR GREATER
2. SITUATION 2: FOR ALL ROOF PITCHES IN VERY HIGH AND EXTRA HIGH WIND ZONES, FOR ALL WIND ZONES WHERE ROOF PITCH IS LESS THAN 10°.
3. WHERE GUTTER FINISHES WITHIN THE LENGTH OF THE WALL, STEP LOWER PART OF GUTTER OUT TO 10mm PAST THE CLADDING LINE, WHILE MAINTAINING REQUIRED CLEARANCES, TO ALLOW THE GUTTER TO FEED INTO THE LOWER EAVES GUTTER.
4. INTERNAL GUTTER SHOULD BE MADE FROM NONFERROUS METAL COMPATIBLE WITH THE ROOFING MATERIAL
5. GUTTER SHALL BE SIZED TO SUIT THE ROOF CATCHMENT AREA BUT SHALL BE NO LESS THAN THAN SHOWN IN THIS FIGURE AND DESIGNED IN ACCORDANCE WITH E2/AS1 AND/OR THE NZ METAL ROOF & WALL CLADDING CODE OF PRACTICE.

NOTES:

- These details are generally in compliance with E2/AS1 and/or the NZ Metal Roof & Wall Cladding Code of Practice and in some cases specific details by 'Roofing Industries'.
- The building designer is ultimatley responsible to ensure that details used meet the requirements of the NZ Building Code for the specific project.
- Details of the supporting structure including cavity battens are indicative only and are the responsibility of the building designer. For steel framed buildings thermal break cavity battens may be required.
- Underlay selection and building wrap types are the responsibility of the designer, Netting or other support is generally required at roof pitches less than 8 degrees combined with a self supporting paper. At roof pitches of 8° and above where non self supporting paper is used or purlin spacing is in excess of self supporting criteria, netting or other support should be used. Alternative support to netting should be used in severe coastal environments including when aluminium is used.
- These details are for Roofing Industries profile/s as nominated and may not be applicable to other profiles.
- This drawing is the copyright of 'Roofing Industries' and can only be copied or reproduced with their permission.
- These details to be read with Roofing Industries profile technical summary regarding wind loads and fixings.
- Further information can be obtained from the NZ Metal Roof & Wall Cladding Code of Practice: www.metalroofing.org.nz OR NZBC clause E2/AS1.

Roofing Industries
roof.co.nz

RESIDENTIAL TRIMRIB® ROOFING
PARALLEL HIDDEN OR OBTUSE GUTTER (CAVITY)

Detail Number: RI-RTR012B
Date drawn: 07/07/2017
Scale: 1 : 5@ A4

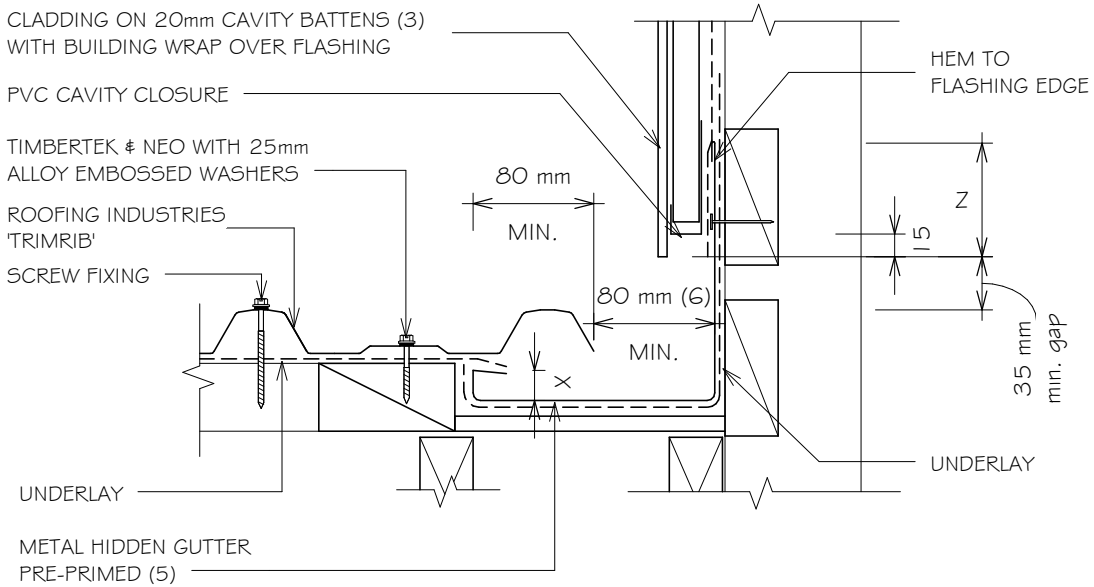

SITE WIND ZONE (As per NZS3604)	MINIMUM	GUTTER DEPTH	
	Z	ROOF PITCH	X (6) min
SITUATION 1 (1)	75	< 12°	45
SITUATION 2 (2)	100	12° or greater	20

NOTES:

DESIGNER TO ENSURE DURABILITY OF FLASHING MATERIAL;

1. SITUATION 1: IN LOW, MEDIUM OR HIGH WIND ZONES, WHERE ROOF PITCH IS 10° OR GREATER
2. SITUATION 2: FOR ALL ROOF PITCHES IN VERY HIGH AND EXTRA HIGH WIND ZONES, FOR ALL WIND ZONES WHERE ROOF PITCH IS LESS THAN 10°.
3. CAVITY BATTENS OR PACKERS CONTAINING CORROSIVE MATERIAL MUST BE SEPARATED FROM METAL CLADDING BY DPC, BUILDING WRAP, PVC OR PAINTING.
4. WHERE GUTTER FINISHES WITHIN THE LENGTH OF THE WALL, STEP LOWER PART OF GUTTER OUT TO 10mm PAST THE CLADDING LINE, WHILE MAINTAINING REQUIRED CLEARANCES, TO ALLOW THE GUTTER TO FEED INTO THE LOWER EAVES GUTTER.
5. INTERNAL GUTTER SHOULD BE MADE FROM NONFERROUS METAL COMPATIBLE WITH THE ROOFING MATERIAL
6. GUTTER SHALL BE SIZED TO SUIT THE ROOF CATCHMENT AREA BUT SHALL BE NO LESS THAN THAN SHOWN IN THIS FIGURE AND DESIGNED IN ACCORDANCE WITH E2/AS AND/OR THE NZ METAL ROOF & WALL CLADDING CODE OF PRACTICE.

NOTES:

- These details are generally in compliance with E2/AS1 and/or the NZ Metal Roof & Wall Cladding Code of Practice and in some cases specific details by 'Roofing Industries'.
- The building designer is ultimatley responsible to ensure that details used meet the requirements of the NZ Building Code for the specific project.
- Details of the supporting structure including cavity battens are indicative only and are the responsibility of the building designer. For steel framed buildings thermal break cavity battens may be required.
- Underlay selection and building wrap types are the responsibility of the designer, Netting or other support is generally required at roof pitches less than 8 degrees combined with a self supporting paper. At roof pitches of 8° and above where non self supporting paper is used or purlin spacing is in excess of self supporting criteria, netting or other support should be used. Alternative support to netting should be used in severe coastal environments including when aluminium is used.
- These details are for Roofing Industries profile/s as nominated and may not be applicable to other profiles.
- This drawing is the copyright of 'Roofing Industries' and can only be copied or reproduced with their permission.
- These details to be read with Roofing Industries profile technical summary regarding wind loads and fixings.
- Further information can be obtained from the NZ Metal Roof & Wall Cladding Code of Practice: www.metalroofing.org.nz OR NZBC clause E2/AS1.

Roofing Industries
roof.co.nz

RESIDENTIAL TRIMRIB® ROOFING
PARALLEL HIDDEN OR OBTUSE 2 PIECE GUTTER (CAVITY)

Detail Number: RI-RTR012C
Date drawn: 07/07/2017
Scale: 1 : 5@ A4

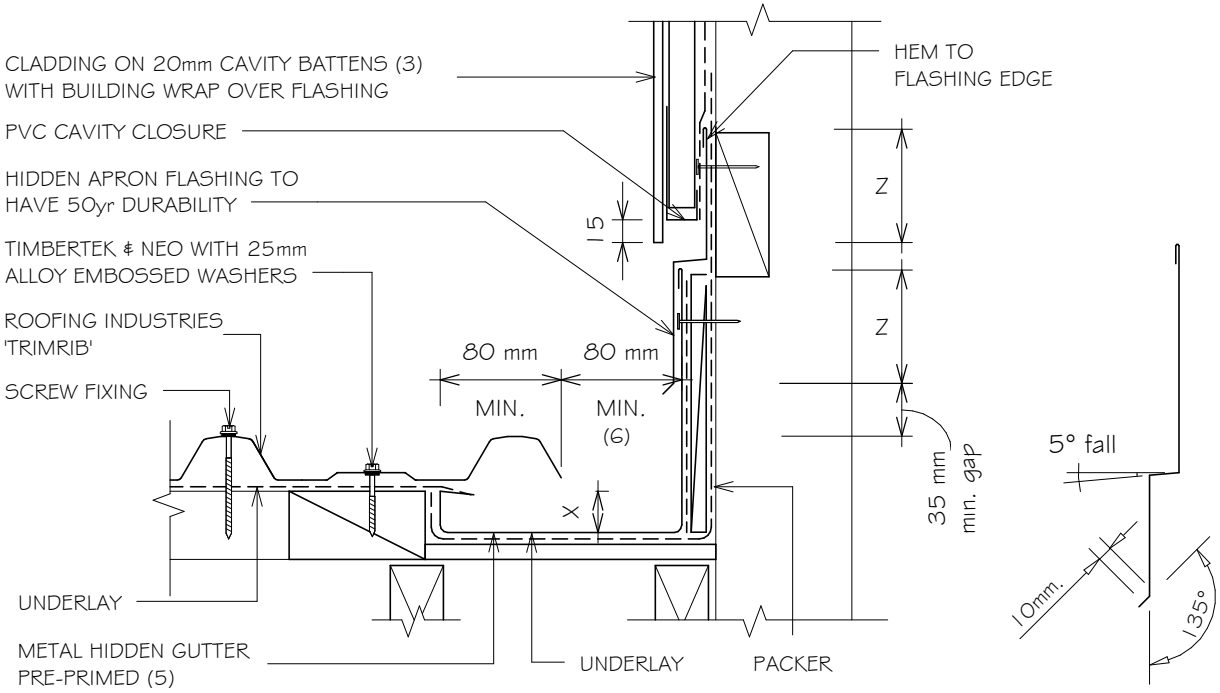

SITE WIND ZONE (As per NZS3604)	MINIMUM Z	GUTTER DEPTH	
		ROOF PITCH	X (6) min
SITUATION 1 (1)	75	< 12°	45
SITUATION 2 (2)	100	12° or greater	20

NOTES:

DESIGNER TO ENSURE DURABILITY OF FLASHING MATERIAL;

1. SITUATION 1: IN LOW, MEDIUM OR HIGH WIND ZONES, WHERE ROOF PITCH IS 10° OR GREATER
2. SITUATION 2: FOR ALL ROOF PITCHES IN VERY HIGH AND EXTRA HIGH WIND ZONES, FOR ALL WIND ZONES WHERE ROOF PITCH IS LESS THAN 10°.
3. CAVITY BATTENS OR PACKERS CONTAINING CORROSIVE MATERIAL MUST BE SEPARATED FROM METAL CLADDING BY DPC, BUILDING WRAP, PVC OR PAINTING.
4. WHERE GUTTER FINISHES WITHIN THE LENGTH OF THE WALL, STEP LOWER PART OF GUTTER OUT TO 10mm PAST THE CLADDING LINE, WHILE MAINTAINING REQUIRED CLEARANCES, TO ALLOW THE GUTTER TO FEED INTO THE LOWER EAVES GUTTER.
5. INTERNAL GUTTER SHOULD BE MADE FROM NONFERROUS METAL COMPATIBLE WITH THE ROOFING MATERIAL
6. GUTTER SHALL BE SIZED TO SUIT THE ROOF CATCHMENT AREA BUT SHALL BE NO LESS THAN THAN SHOWN IN THIS FIGURE AND DESIGNED IN ACCORDANCE WITH E2/AS1 AND/OR THE NZ METAL ROOF & WALL CLADDING CODE OF PRACTICE.

NOTES:

- These details are generally in compliance with E2/AS1 and/or the NZ Metal Roof & Wall Cladding Code of Practice and in some cases specific details by 'Roofing Industries'.
- The building designer is ultimatley responsible to ensure that details used meet the requirements of the NZ Building Code for the specific project.
- Details of the supporting structure including cavity battens are indicative only and are the responsibility of the building designer. For steel framed buildings thermal break cavity battens may be required.
- Underlay selection and building wrap types are the responsibility of the designer, Netting or other support is generally required at roof pitches less than 8 degrees combined with a self supporting paper. At roof pitches of 8° and above where non self supporting paper is used or purlin spacing is in excess of self supporting criteria, netting or other support should be used. Alternative support to netting should be used in severe coastal environments including when aluminium is used.
- These details are for Roofing Industries profile/s as nominated and may not be applicable to other profiles.
- This drawing is the copyright of 'Roofing Industries' and can only be copied or reproduced with their permission.
- These details to be read with Roofing Industries profile technical summary regarding wind loads and fixings.
- Further information can be obtained from the NZ Metal Roof & Wall Cladding Code of Practice: www.metalroofing.org.nz OR NZBC clause E2/AS1.

Roofing Industries
roof.co.nz

RESIDENTIAL TRIMRIB® ROOFING
MANSARD / EXTERNAL CHANGE IN PITCH FLASHING

Detail Number: RI-RTR013A
Date drawn: 07/07/2017
Scale: 1 : 5@ A4

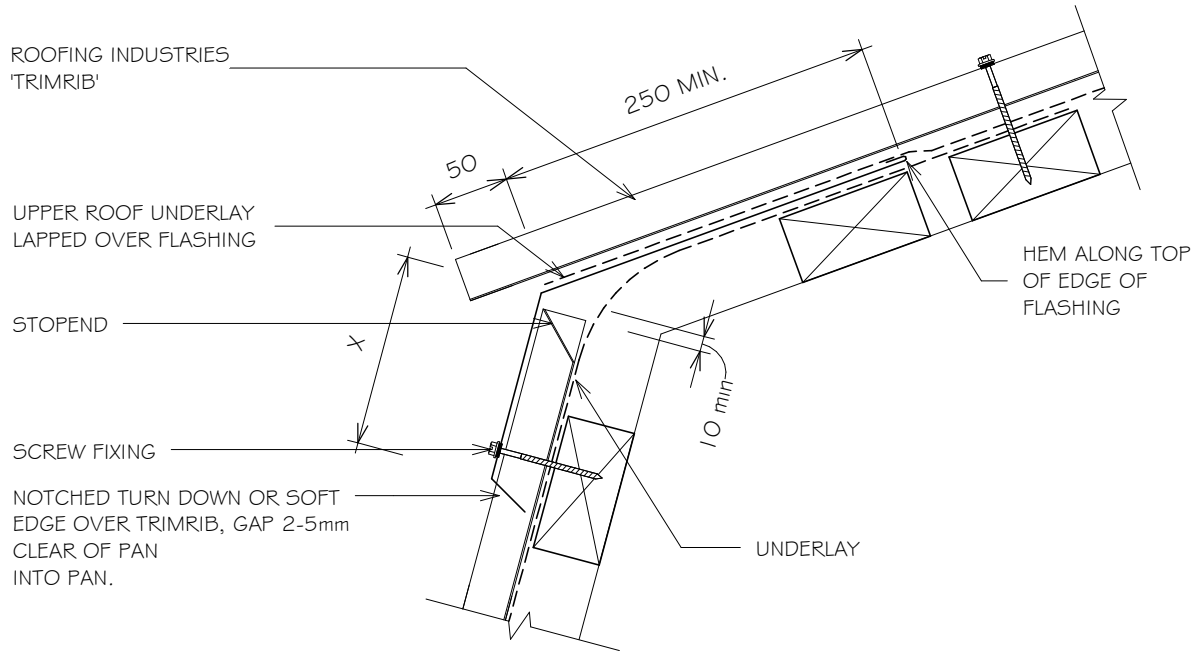

SITE WIND ZONE (As per NZS3604)	MIN mm	(X)
	UPPER LAP UNDER ROOFING	TRANSVERSE FLASHING OVER ROOFING
SITUATION 1 (2)	250 (1)	150 (5)
SITUATION 2 (3)	250 (1)	200 (5)
SITUATION 3 (4)	(6)	

NOTES:

1. UNLESS OTHERWISE DIMENSIONED IN DETAILS
2. SITUATION 1: IN LOW, MEDIUM OR HIGH WIND ZONES, WHERE ROOF PITCH IS 10° OR GREATER
3. SITUATION 2: FOR ALL ROOF PITCHES IN VERY HIGH WIND ZONES, FOR ALL LESSOR WIND ZONES WHERE ROOF PITCH LESS THAN 10°.
4. SITUATION 3: FOR ALL ROOF PITCHES IN EXTRA HIGH WIND ZONES.
5. EXCLUDING ANY SOFT EDGE OR TURN-DOWN TO ROOFING.
6. NOT PERMITTED UNDER E2/AS1, REFER NZ METAL ROOF & WALL CLADDING CODE OF PRACTICE.

NOTES:

- These details are generally in compliance with E2/AS1 and/or the NZ Metal Roof & Wall Cladding Code of Practice and in some cases specific details by 'Roofing Industries'.
- The building designer is ultimatley responsible to ensure that details used meet the requirements of the NZ Building Code for the specific project.
- Details of the supporting structure including cavity battens are indicative only and are the responsibility of the building designer. For steel framed buildings thermal break cavity battens may be required.
- Underlay selection and building wrap types are the responsibility of the designer, Netting or other support is generally required at roof pitches less than 8 degrees combined with a self supporting paper. At roof pitches of 8° and above where non self supporting paper is used or purlin spacing is in excess of self supporting criteria, netting or other support should be used. Alternative support to netting should be used in severe coastal environments including when aluminium is used.
- These details are for Roofing Industries profile/s as nominated and may not be applicable to other profiles.
- This drawing is the copyright of 'Roofing Industries' and can only be copied or reproduced with their permission.
- These details to be read with Roofing Industries profile technical summary regarding wind loads and fixings.
- Further information can be obtained from the NZ Metal Roof & Wall Cladding Code of Practice: www.metalroofing.org.nz OR NZBC clause E2/AS1.

Roofing Industries
roof.co.nz

RESIDENTIAL TRIMRIB® ROOFING
EPDM FLASHING FOR UP TO 85mm DIA PIPE

Detail Number: RI-RTR014A

Date drawn: 07/07/2017

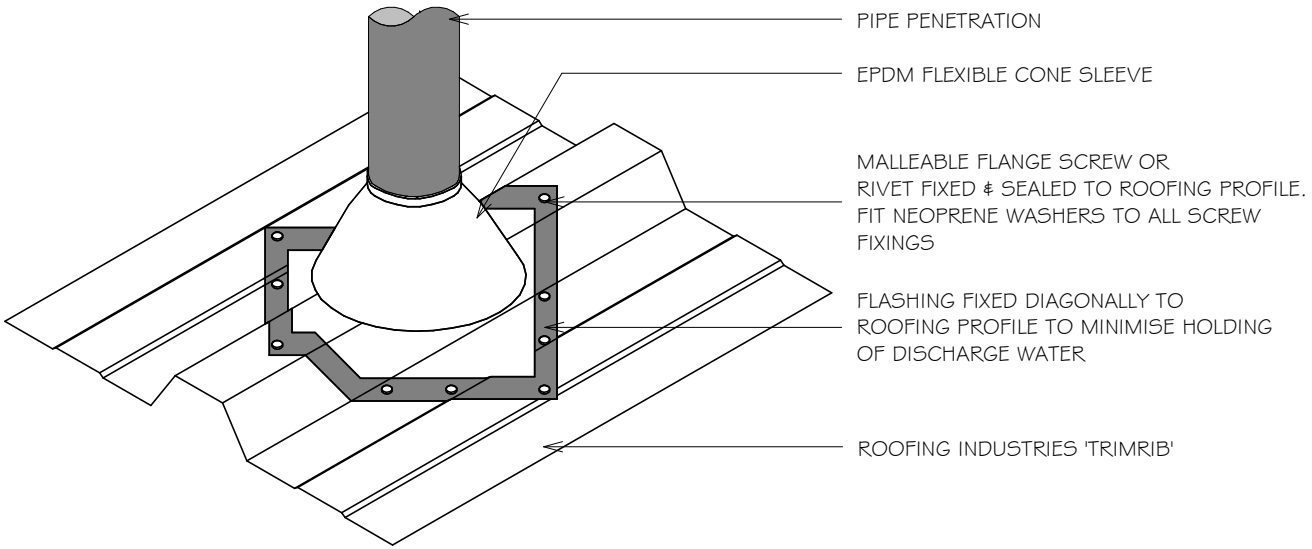

NOTES:

1. FOR PIPES UP TO 85mm DIAMETER.
2. MAX ROOF PITCH FOR THIS FLASHING 45°.
3. MAXIMUM ROOF LENGTH ABOVE PENETRATION NOT TO EXCEED 12.0 METRES.
4. ALSO REFER TO NZ METAL ROOF & WALL CLADDING CODE OF PRACTICE.

NOTES:

- These details are generally in compliance with E2/AS1 and/or the NZ Metal Roof & Wall Cladding Code of Practice and in some cases specific details by 'Roofing Industries'.
- The building designer is ultimatley responsible to ensure that details used meet the requirements of the NZ Building Code for the specific project.
- Details of the supporting structure including cavity battens are indicative only and are the responsibility of the building designer. For steel framed buildings thermal break cavity battens may be required.
- Underlay selection and building wrap types are the responsibility of the designer, Netting or other support is generally required at roof pitches less than 8 degrees combined with a self supporting paper. At roof pitches of 8° and above where non self supporting paper is used or purlin spacing is in excess of self supporting criteria, netting or other support should be used. Alternative support to netting should be used in severe coastal environments including when aluminium is used.
- These details are for Roofing Industries profile/s as nominated and may not be applicable to other profiles.
- This drawing is the copyright of 'Roofing Industries' and can only be copied or reproduced with their permission.
- These details to be read with Roofing Industries profile technical summary regarding wind loads and fixings.
- Further information can be obtained from the NZ Metal Roof & Wall Cladding Code of Practice: www.metalroofing.org.nz OR NZBC clause E2/AS1.

Roofing Industries
roof.co.nz

RESIDENTIAL TRIMRIB® ROOFING
UNDER RIDGE / APRON SOAKER FLASHING FOR PIPE / CHIMNEY PENETRATION UP TO 500mm DIA.

Detail Number: RI-RTR015A

Date drawn: 07/07/2017

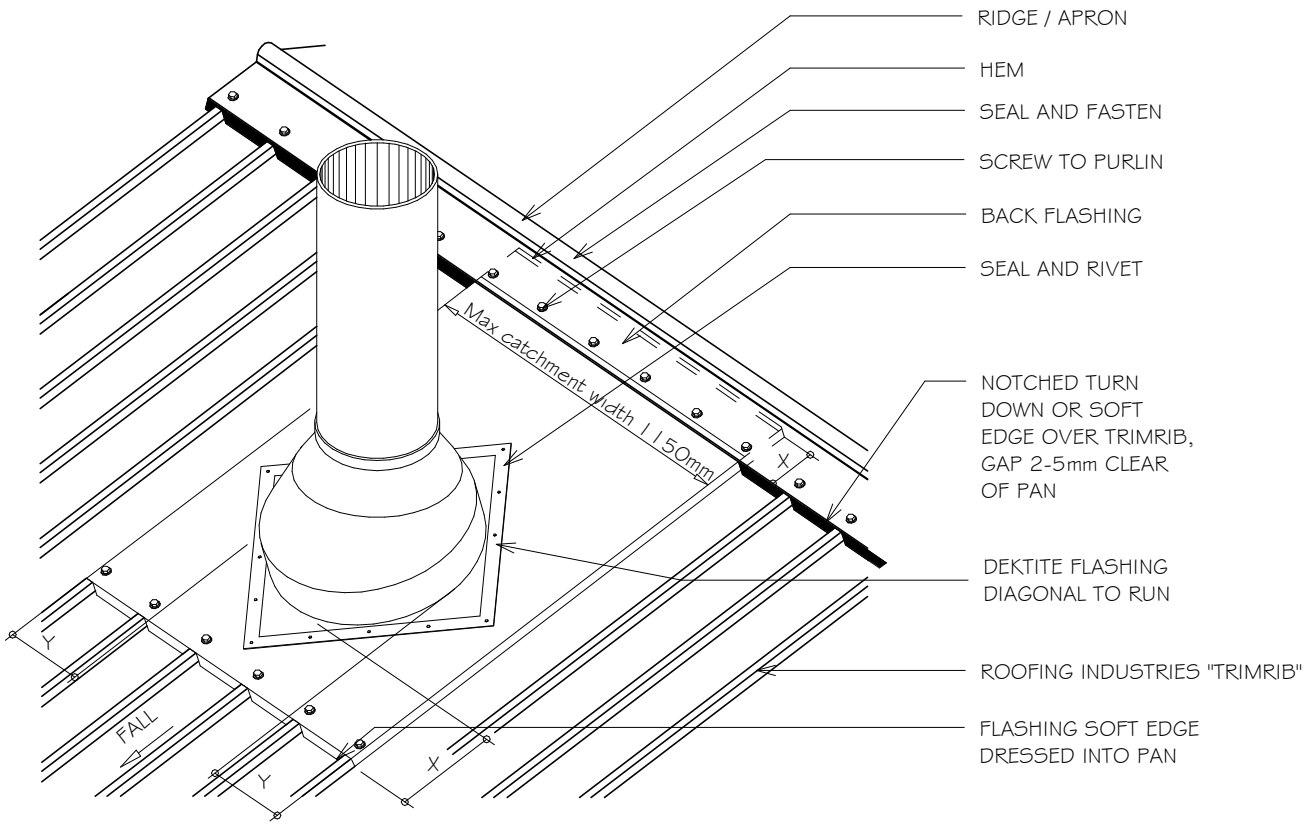

SITE WIND ZONE (As per NZS3604)	MIN mm (cover)	
	X	Y
SITUATION 1 (1)	150	2 CRESTS
SITUATION 2 (2)	200	2 CRESTS

NOTES:

1. SITUATION 1: IN LOW, MEDIUM OR HIGH WIND ZONES, WHERE ROOF PITCH IS 10° OR GREATER.
2. SITUATION 2: FOR ALL ROOF PITCHES IN VERY HIGH & EXTRA HIGH WIND ZONES, FOR ALL LESSOR WIND ZONES WHERE ROOF PITCH LESS THAN 10°.
3. SUITABLE FOR PIPES UP TO 500mm DIAMETER.
4. MAX ROOF PITCH FOR THIS FLASHING 45°.
5. ADDITIONAL SUPPORT FRAMING REQUIRED WHEN PENETRATION EXCEEDS 200mm THROUGH ROOF.
6. ALSO REFER TO NZ METAL ROOF & CLADDING CODE OF PRACTICE.

CATCHMENT WIDTH	MAX ROOF LENGTH ABOVE PENETRATION
0-400	18 METRES
400-600	16 METRES
600-800	12 METRES
800-1150	8 METRES

NOTES:

- These details are generally in compliance with E2/AS1 and/or the NZ Metal Roof & Wall Cladding Code of Practice and in some cases specific details by 'Roofing Industries'.
- The building designer is ultimatley responsible to ensure that details used meet the requirements of the NZ Building Code for the specific project.
- Details of the supporting structure including cavity battens are indicative only and are the responsibility of the building designer. For steel framed buildings thermal break cavity battens may be required.
- Underlay selection and building wrap types are the responsibility of the designer, Netting or other support is generally required at roof pitches less than 8 degrees combined with a self supporting paper. At roof pitches of 8° and above where non self supporting paper is used or purlin spacing is in excess of self supporting criteria, netting or other support should be used. Alternative support to netting should be used in severe coastal environments including when aluminium is used.
- These details are for Roofing Industries profile/s as nominated and may not be applicable to other profiles.
- This drawing is the copyright of 'Roofing Industries' and can only be copied or reproduced with their permission.
- These details to be read with Roofing Industries profile technical summary regarding wind loads and fixings.
- Further information can be obtained from the NZ Metal Roof & Wall Cladding Code of Practice: www.metalroofing.org.nz OR NZBC clause E2/AS1.

Roofing Industries
roof.co.nz

RESIDENTIAL TRIMRIB® ROOFING
SOAKER FLASHING FOR PIPE / CHIMNEY PENETRATION
(85-500mm DIA, MID ROOF)

Detail Number: RI-RTR015B

Date drawn: 07/07/2017

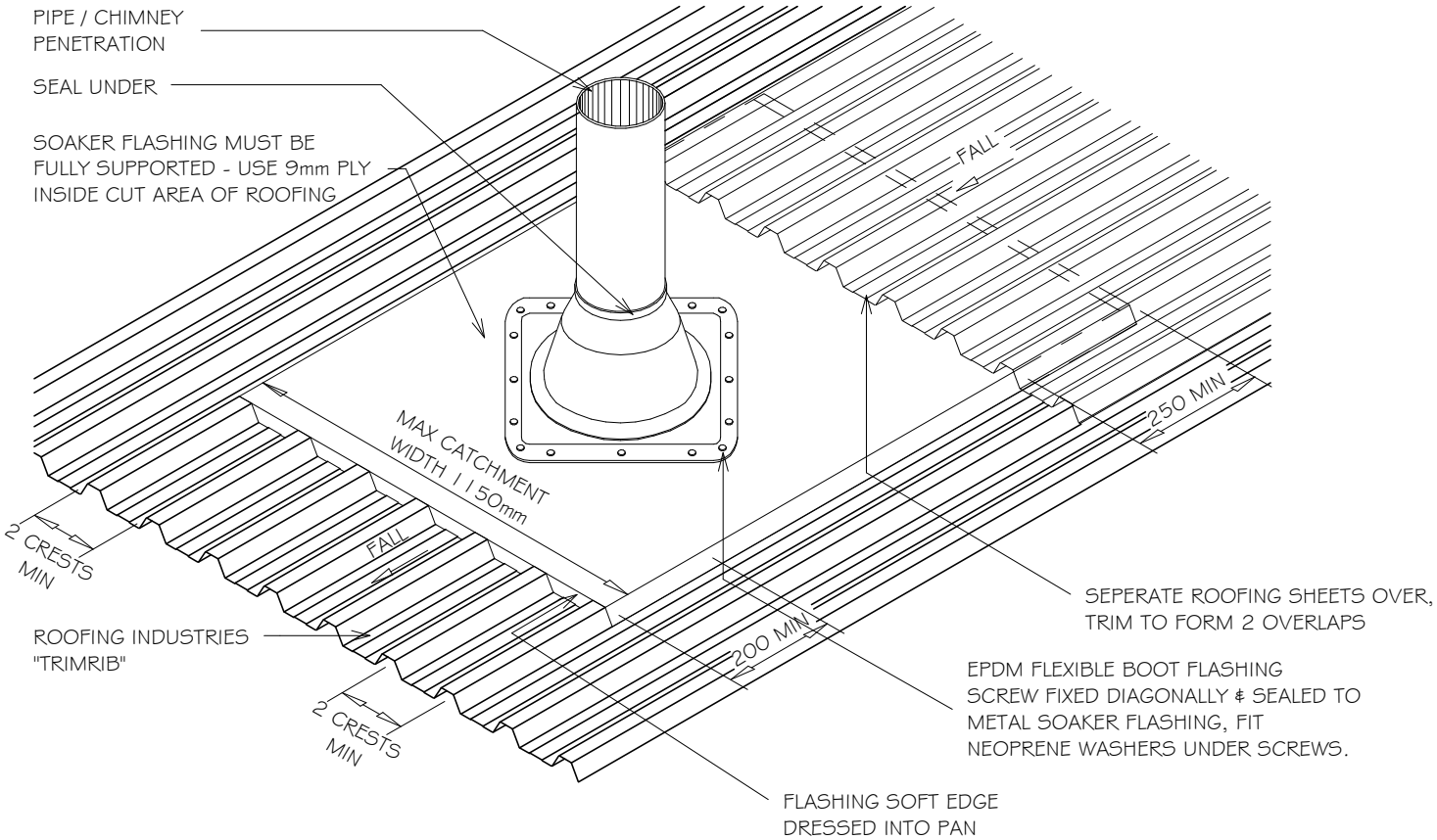

NOTES:

1. SITUATION 1: IN LOW, MEDIUM OR HIGH WIND ZONES, WHERE ROOF PITCH IS 10° OR GREATER.
2. SITUATION 2: FOR ALL ROOF PITCHES IN VERY HIGH & EXTRA HIGH WIND ZONES, FOR ALL LESSOR WIND ZONES WHERE ROOF PITCH LESS THAN 10°.
3. SUITABLE FOR PIPES UP TO 500mm DIAMETER.
4. MAX ROOF PITCH FOR THIS FLASHING 45°.
5. ADDITIONAL SUPPORT FRAMING REQUIRED WHEN PENETRATION EXCEEDS 200mm THROUGH ROOF.
6. ALSO REFER TO NZ METAL ROOF & CLADDING CODE OF PRACTICE.

SITE WIND ZONE (As per NZS3604)	MIN mm (cover)	
	X	Y
SITUATION 1 (1)	150	2 CRESTS
SITUATION 2 (2)	200	2 CRESTS

CATCHMENT WIDTH	MAX ROOF LENGTH ABOVE PENETRATION
0-400	18 METRES
400-600	16 METRES
600-800	12 METRES
800-1150	8 METRES

NOTES:

- These details are generally in compliance with E2/AS1 and/or the NZ Metal Roof & Wall Cladding Code of Practice and in some cases specific details by 'Roofing Industries'.
- The building designer is ultimatley responsible to ensure that details used meet the requirements of the NZ Building Code for the specific project.
- Details of the supporting structure including cavity battens are indicative only and are the responsibility of the building designer. For steel framed buildings thermal break cavity battens may be required.
- Underlay selection and building wrap types are the responsibility of the designer, Netting or other support is generally required at roof pitches less than 8 degrees combined with a self supporting paper. At roof pitches of 8° and above where non self supporting paper is used or purlin spacing is in excess of self supporting criteria, netting or other support should be used. Alternative support to netting should be used in severe coastal environments including when aluminium is used.
- These details are for Roofing Industries profile/s as nominated and may not be applicable to other profiles.
- This drawing is the copyright of 'Roofing Industries' and can only be copied or reproduced with their permission.
- These details to be read with Roofing Industries profile technical summary regarding wind loads and fixings.
- Further information can be obtained from the NZ Metal Roof & Wall Cladding Code of Practice: www.metalroofing.org.nz OR NZBC clause E2/AS1.

Roofing Industries
roof.co.nz

RESIDENTIAL TRIMRIB® ROOFING
UNDER RIDGE / APRON CHIMNEY FLASHING

Detail Number: RI-RTR016A

Date drawn: 07/07/2017

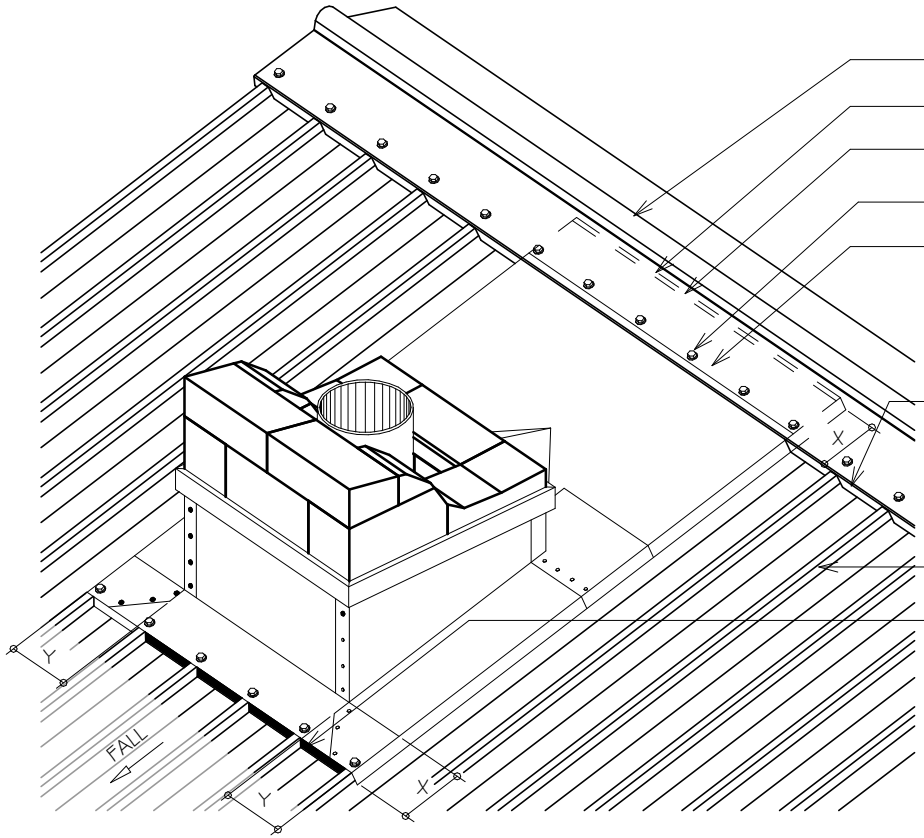

RIDGE / APRON

HEM

SEAL AND FASTEN

SCREW TO PURLIN

BACK FLASHING

NOTCHED TURN DOWN OR SOFT EDGE OVER TRIMRIB, GAP 2-5mm CLEAR OF PAN

ROOFING INDUSTRIES "TRIMRIB"

FLASHING SOFT EDGE DRESSED INTO PROFILE

LAYING SEQUENCE:
A. SOFTEDGE APRON,
B. SIDE FLASHING,
C. BACK FLASHING,
D. COVER FLASHING (CHASED)

NOTES:

1. SITUATION 1: IN LOW, MEDIUM OR HIGH WIND ZONES, WHERE ROOF PITCH IS 10° OR GREATER.
2. SITUATION 2: FOR ALL ROOF PITCHES IN VERY HIGH & EXTRA HIGH WIND ZONES, FOR ALL LESSOR WIND ZONES WHERE ROOF PITCH LESS THAN 10°.
3. ALSO REFER TO NZ METAL ROOF & CLADDING CODE OF PRACTICE.

CATCHMENT WIDTH	MAX ROOF LENGTH ABOVE PENETRATION
0-400	18 METRES
400-600	16 METRES
600-800	12 METRES
800-1200	8 METRES

SITE WIND ZONE (As per NZS3604)	MIN mm (cover)	
	X	Y
SITUATION 1 (1)	150	2 CRESTS
SITUATION 2 (2)	200	2 CRESTS

NOTES:

- These details are generally in compliance with E2/AS1 and/or the NZ Metal Roof & Wall Cladding Code of Practice and in some cases specific details by 'Roofing Industries'.
- The building designer is ultimatley responsible to ensure that details used meet the requirements of the NZ Building Code for the specific project.
- Details of the supporting structure including cavity battens are indicative only and are the responsibility of the building designer. For steel framed buildings thermal break cavity battens may be required.
- Underlay selection and building wrap types are the responsibility of the designer, Netting or other support is generally required at roof pitches less than 8 degrees combined with a self supporting paper. At roof pitches of 8° and above where non self supporting paper is used or purlin spacing is in excess of self supporting criteria, netting or other support should be used. Alternative support to netting should be used in severe coastal environments including when aluminium is used.
- These details are for Roofing Industries profile/s as nominated and may not be applicable to other profiles.
- This drawing is the copyright of 'Roofing Industries' and can only be copied or reproduced with their permission.
- These details to be read with Roofing Industries profile technical summary regarding wind loads and fixings.
- Further information can be obtained from the NZ Metal Roof & Wall Cladding Code of Practice: www.metalroofing.org.nz OR NZBC clause E2/AS1.

Roofing Industries
roof.co.nz

RESIDENTIAL TRIMRIB® ROOFING
CHIMNEY FLASHING, MID ROOF

Detail Number: RI-RTR016B

Date drawn: 07/07/2017

NOTE:
USE BACK FLASHING TO RIDGE WHERE POSSIBLE.

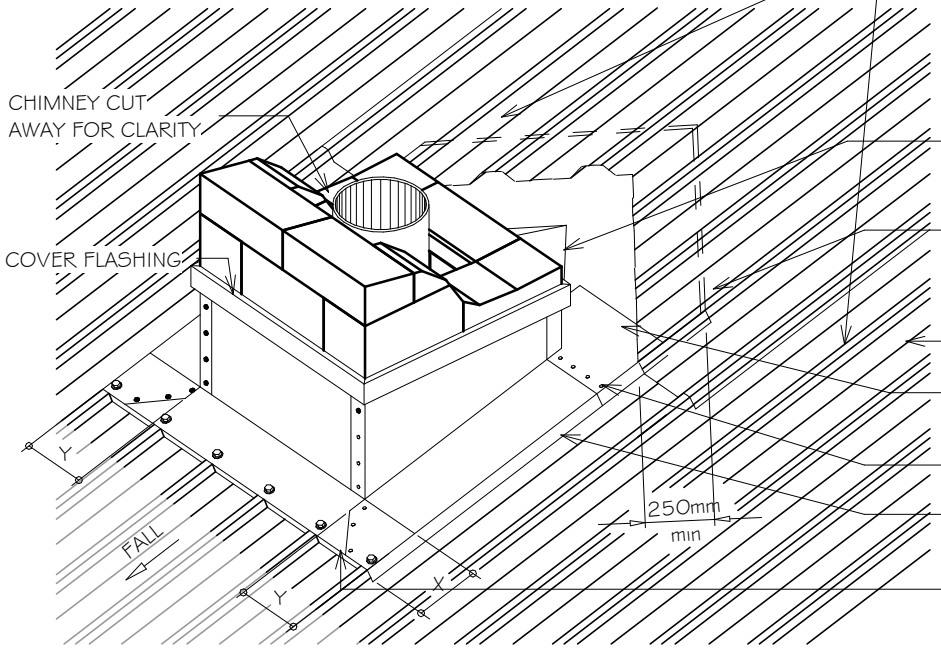

SEPERATE ROOFING SHEET/S TRIM TO FORM TWO OVERLAPS

FLOW OR CRICKET FLASHING AS PER NZMR&WCCOP

HEM

ROOFING INDUSTRIES "TRIMRIB"

BACK FLASHING

SEAL & RIVET

SIDE FLASHING

FLASHING SOFT EDGE DRESSED INTO PROFILE

LAYING SEQUENCE:
A. SOFTEDGE APRON,
B. SIDE FLASHING,
C. BACK FLASHING,
D. COVER FLASHING (CHASED)

NOTES:

1. SITUATION 1: IN LOW, MEDIUM OR HIGH WIND ZONES, WHERE ROOF PITCH IS 10° OR GREATER.
2. SITUATION 2: FOR ALL ROOF PITCHES IN VERY HIGH & EXTRA HIGH WIND ZONES, FOR ALL LESSOR WIND ZONES WHERE ROOF PITCH LESS THAN 10°.
3. ALSO REFER TO NZ METAL ROOF & CLADDING CODE OF PRACTICE.

SUITABLE FOR ROOF PITCHES OF 10° OR HIGHER UNDER E2@AS1

CATCHMENT WIDTH	MAX ROOF LENGTH ABOVE PENETRATION
0-400	18 METRES
400-600	16 METRES
600-800	12 METRES
800-1200	8 METRES

SITE WIND ZONE (As per NZS3604)	MIN mm (cover)	
	X	Y
SITUATION 1 (1)	150	2 CRESTS
SITUATION 2 (2)	200	2 CRESTS

NOTES:

- These details are generally in compliance with E2/AS1 and/or the NZ Metal Roof & Wall Cladding Code of Practice and in some cases specific details by 'Roofing Industries'.
- The building designer is ultimatley responsible to ensure that details used meet the requirements of the NZ Building Code for the specific project.
- Details of the supporting structure including cavity battens are indicative only and are the responsibility of the building designer. For steel framed buildings thermal break cavity battens may be required.
- Underlay selection and building wrap types are the responsibility of the designer, Netting or other support is generally required at roof pitches less than 8 degrees combined with a self supporting paper. At roof pitches of 8° and above where non self supporting paper is used or purlin spacing is in excess of self supporting criteria, netting or other support should be used. Alternative support to netting should be used in severe coastal environments including when aluminium is used.
- These details are for Roofing Industries profile/s as nominated and may not be applicable to other profiles.
- This drawing is the copyright of 'Roofing Industries' and can only be copied or reproduced with their permission.
- These details to be read with Roofing Industries profile technical summary regarding wind loads and fixings.
- Further information can be obtained from the NZ Metal Roof & Wall Cladding Code of Practice: www.metalroofing.org.nz OR NZBC clause E2/AS1.

Roofing Industries
roof.co.nz

RESIDENTIAL TRIMRIB® ROOFING
CHIMNEY FLASHING, MID ROOF

Detail Number: RI-RTR016C

Date drawn: 07/07/2017

NOTE:
USE BACK FLASHING TO RIDGE WHERE POSSIBLE.

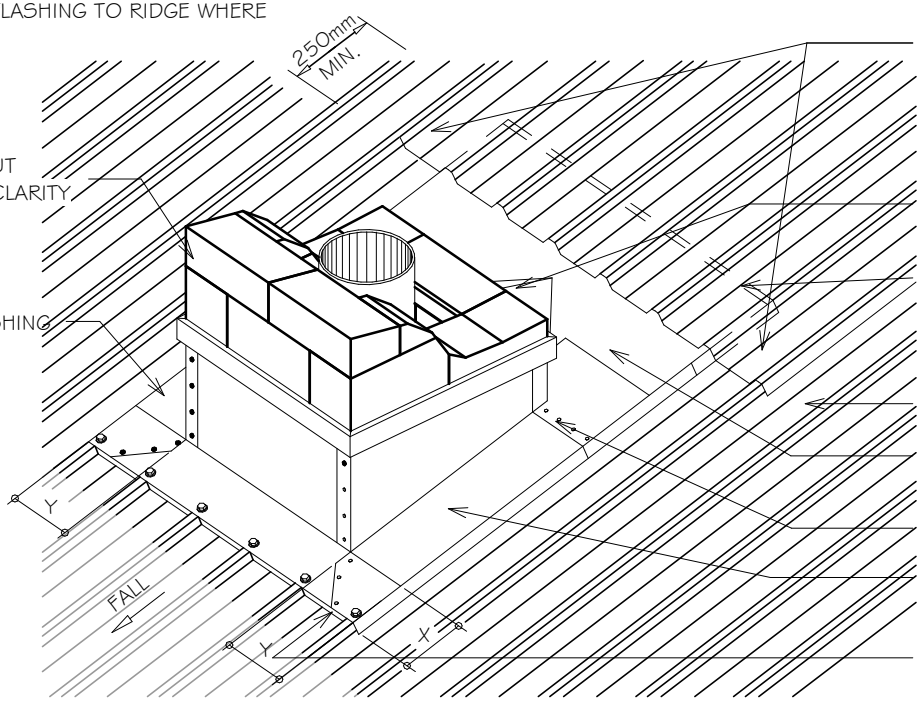

LAYING SEQUENCE:
A. SOFTEDGE APRON,
B. SIDE FLASHING,
C. BACK FLASHING,
D. COVER FLASHING (CHASED)

NOTES:

1. SITUATION 1: IN LOW, MEDIUM OR HIGH WIND ZONES, WHERE ROOF PITCH IS 10° OR GREATER.
2. SITUATION 2: FOR ALL ROOF PITCHES IN VERY HIGH & EXTRA HIGH WIND ZONES, FOR ALL LESSOR WIND ZONES WHERE ROOF PITCH LESS THAN 10°.
3. ALSO REFER TO NZ METAL ROOF & CLADDING CODE OF PRACTICE.

SUITABLE FOR ROOF PITCHES OF 10° OR HIGHER UNDER E2/AS1

CATCHMENT WIDTH	MAX ROOF LENGTH ABOVE PENETRATION
0-400	18 METRES
400-600	16 METRES
600-800	12 METRES
800-1200	8 METRES

SITE WIND ZONE (As per NZS3604)	MIN mm (cover)	
	X	Y
SITUATION 1 (1)	150	2 CRESTS
SITUATION 2 (2)	200	2 CRESTS

NOTES:

- These details are generally in compliance with E2/AS1 and/or the NZ Metal Roof & Wall Cladding Code of Practice and in some cases specific details by 'Roofing Industries'.
- The building designer is ultimatley responsible to ensure that details used meet the requirements of the NZ Building Code for the specific project.
- Details of the supporting structure including cavity battens are indicative only and are the responsibility of the building designer. For steel framed buildings thermal break cavity battens may be required.
- Underlay selection and building wrap types are the responsibility of the designer, Netting or other support is generally required at roof pitches less than 8 degrees combined with a self supporting paper. At roof pitches of 8° and above where non self supporting paper is used or purlin spacing is in excess of self supporting criteria, netting or other support should be used. Alternative support to netting should be used in severe coastal environments including when aluminium is used.
- These details are for Roofing Industries profile/s as nominated and may not be applicable to other profiles.
- This drawing is the copyright of 'Roofing Industries' and can only be copied or reproduced with their permission.
- These details to be read with Roofing Industries profile technical summary regarding wind loads and fixings.
- Further information can be obtained from the NZ Metal Roof & Wall Cladding Code of Practice: www.metalroofing.org.nz OR NZBC clause E2/AS1.

Roofing Industries
roof.co.nz

RESIDENTIAL TRIMRIB® ROOFING
SKYLIGHT FLASHING

Detail Number: RI-RTR016D

Date drawn: 05/23/19

Scale: 1 : 5@ A4

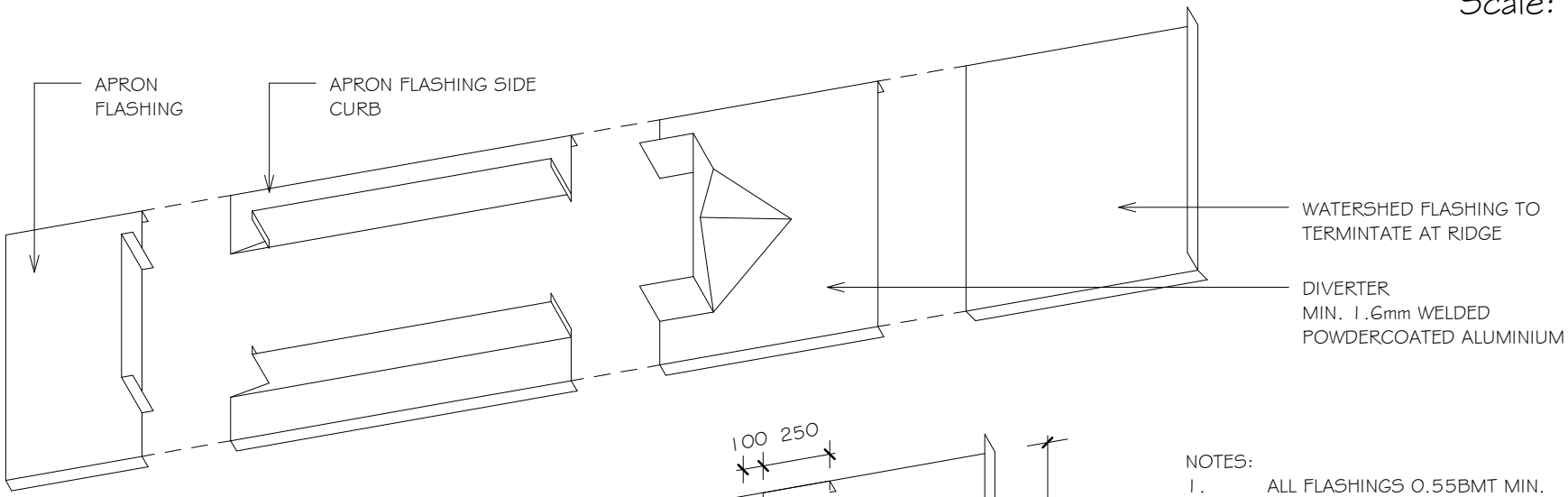

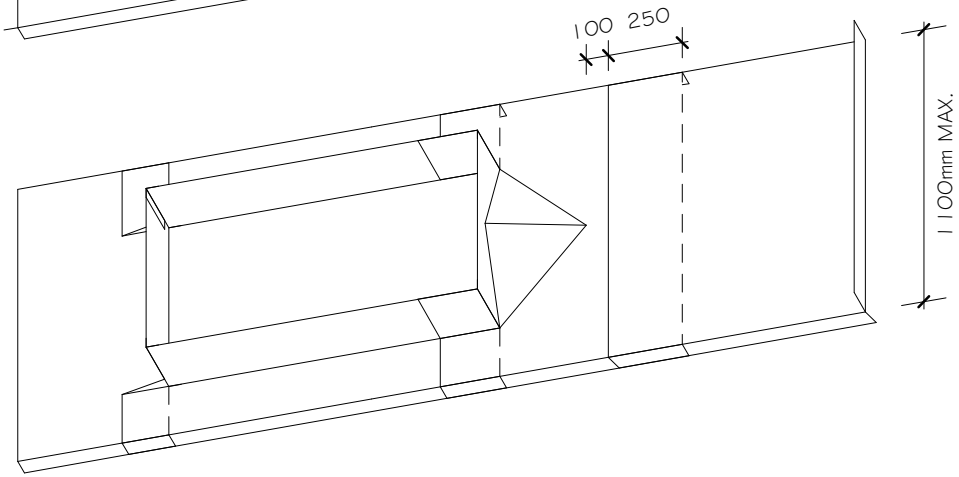

NOTES:

1. ALL FLASHINGS 0.55BMT MIN.
2. FLASHING TO EXTEND UP TO RIDGE FLASHING
3. FORM NEW UPSTANDS WHERE REQUIRED
4. INSTALL WATERSHED FLASHINGS WITH SEPARATING LAYER OF ROOFING UNDERLAY
5. WATERSHED FLASHING TO BE ONE PIECE
6. 2 CRESTS MIN. TO SIDES OF PENETRATION
7. 150mm MIN. UPSTAND TO SKYLIGHT PENETRATION

NOTES:

- These details are generally in compliance with E2/AS1 and/or the NZ Metal Roof & Wall Cladding Code of Practice and in some cases specific details by 'Roofing Industries'.
- The building designer is ultimatley responsible to ensure that details used meet the requirements of the NZ Building Code for the specific project.
- Details of the supporting structure including cavity battens are indicative only and are the responsibility of the building designer. For steel framed buildings thermal break cavity battens may be required.
- Underlay selection and building wrap types are the responsibility of the designer, Netting or other support is generally required at roof pitches less than 8 degrees combined with a self supporting paper. At roof pitches of 8° and above where non self supporting paper is used or purlin spacing is in excess of self supporting criteria, netting or other support should be used. Alternative support to netting should be used in severe coastal environments including when aluminium is used.
- These details are for Roofing Industries profile/s as nominated and may not be applicable to other profiles.
- This drawing is the copyright of 'Roofing Industries' and can only be copied or reproduced with their permission.
- These details to be read with Roofing Industries profile technical summary regarding wind loads and fixings.
- Further information can be obtained from the NZ Metal Roof & Wall Cladding Code of Practice: www.metalroofing.org.nz OR NZBC clause E2/AS1.

Roofing Industries
roof.co.nz

RESIDENTIAL TRIMRIB® ROOFING
LEVEL SOAKER CURB FLASHING

Detail Number: RI-RTR016E
Date drawn: 05/22/19
Scale: 1 : 5@ A4

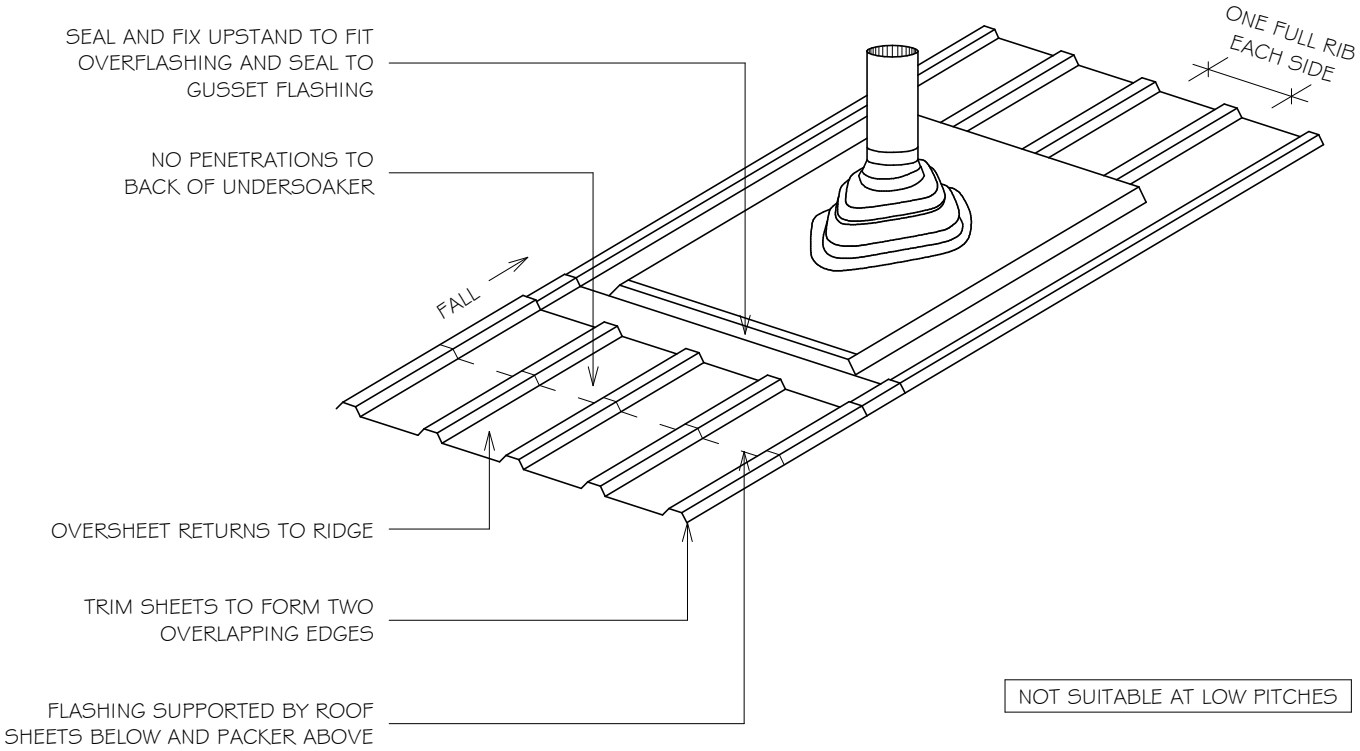

NOT SUITABLE AT LOW PITCHES

NOTES:

- These details are generally in compliance with E2/AS1 and/or the NZ Metal Roof & Wall Cladding Code of Practice and in some cases specific details by 'Roofing Industries'.
- The building designer is ultimatley responsible to ensure that details used meet the requirements of the NZ Building Code for the specific project.
- Details of the supporting structure including cavity battens are indicative only and are the responsibility of the building designer. For steel framed buildings thermal break cavity battens may be required.
- Underlay selection and building wrap types are the responsibility of the designer, Netting or other support is generally required at roof pitches less than 8 degrees combined with a self supporting paper. At roof pitches of 8° and above where non self supporting paper is used or purlin spacing is in excess of self supporting criteria, netting or other support should be used. Alternative support to netting should be used in severe coastal environments including when aluminium is used.
- These details are for Roofing Industries profile/s as nominated and may not be applicable to other profiles.
- This drawing is the copyright of 'Roofing Industries' and can only be copied or reproduced with their permission.
- These details to be read with Roofing Industries profile technical summary regarding wind loads and fixings.
- Further information can be obtained from the NZ Metal Roof & Wall Cladding Code of Practice: www.metalroofing.org.nz OR NZBC clause E2/AS1.

Roofing Industries
roof.co.nz

RESIDENTIAL TRIMRIB® ROOFING
RIDGE / BARGE JUNCTION

Detail Number: RI-RTR025A

Date drawn: 07/07/2017

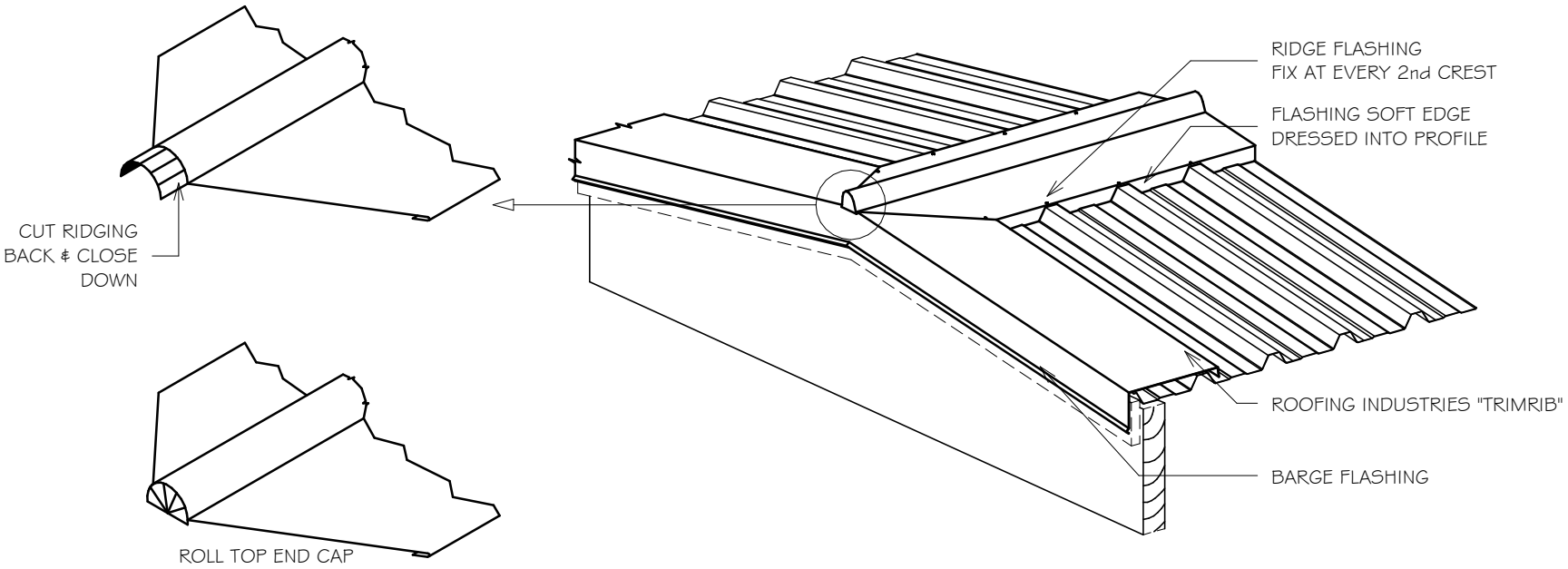

NOTE:

1. FOR RIDGE & BARGE COVERS REFER TO SEPERATE DRAWINGS
2. REFER TO MRM CODE OF PRACTICE

NOTES:

- These details are generally in compliance with E2/AS1 and/or the NZ Metal Roof & Wall Cladding Code of Practice and in some cases specific details by 'Roofing Industries'.
- The building designer is ultimatley responsible to ensure that details used meet the requirements of the NZ Building Code for the specific project.
- Details of the supporting structure including cavity battens are indicative only and are the responsibility of the building designer. For steel framed buildings thermal break cavity battens may be required.
- Underlay selection and building wrap types are the responsibility of the designer, Netting or other support is generally required at roof pitches less than 8 degrees combined with a self supporting paper. At roof pitches of 8° and above where non self supporting paper is used or purlin spacing is in excess of self supporting criteria, netting or other support should be used. Alternative support to netting should be used in severe coastal environments including when aluminium is used.
- These details are for Roofing Industries profile/s as nominated and may not be applicable to other profiles.
- This drawing is the copyright of 'Roofing Industries' and can only be copied or reproduced with their permission.
- These details to be read with Roofing Industries profile technical summary regarding wind loads and fixings.
- Further information can be obtained from the NZ Metal Roof & Wall Cladding Code of Practice: www.metalroofing.org.nz OR NZBC clause E2/AS1.

Roofing Industries
roof.co.nz

RESIDENTIAL TRIMRIB® ROOFING
INTERNAL BARGE FLASHING

Detail Number: RI-RTR026A

Date drawn: 07/07/2017

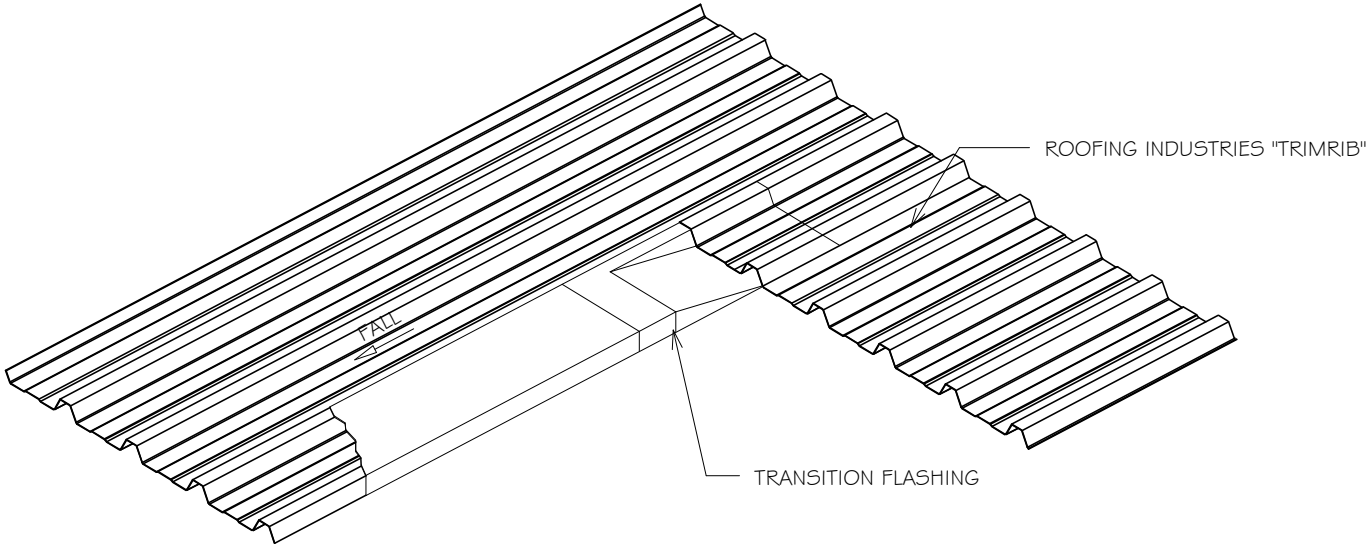

NOT SUITABLE AT LOW PITCHES

NOTES:

- These details are generally in compliance with E2/AS1 and/or the NZ Metal Roof & Wall Cladding Code of Practice and in some cases specific details by 'Roofing Industries'.
- The building designer is ultimatley responsible to ensure that details used meet the requirements of the NZ Building Code for the specific project.
- Details of the supporting structure including cavity battens are indicative only and are the responsibility of the building designer. For steel framed buildings thermal break cavity battens may be required.
- Underlay selection and building wrap types are the responsibility of the designer, Netting or other support is generally required at roof pitches less than 8 degrees combined with a self supporting paper. At roof pitches of 8° and above where non self supporting paper is used or purlin spacing is in excess of self supporting criteria, netting or other support should be used. Alternative support to netting should be used in severe coastal environments including when aluminium is used.
- These details are for Roofing Industries profile/s as nominated and may not be applicable to other profiles.
- This drawing is the copyright of 'Roofing Industries' and can only be copied or reproduced with their permission.
- These details to be read with Roofing Industries profile technical summary regarding wind loads and fixings.
- Further information can be obtained from the NZ Metal Roof & Wall Cladding Code of Practice: www.metalroofing.org.nz OR NZBC clause E2/AS1.

Roofing Industries
roof.co.nz

RESIDENTIAL TRIMRIB® ROOFING
PARALLEL APRON DIVERTER JUNCTION

Detail Number: RI-RTR027A

Date drawn: 07/07/2017

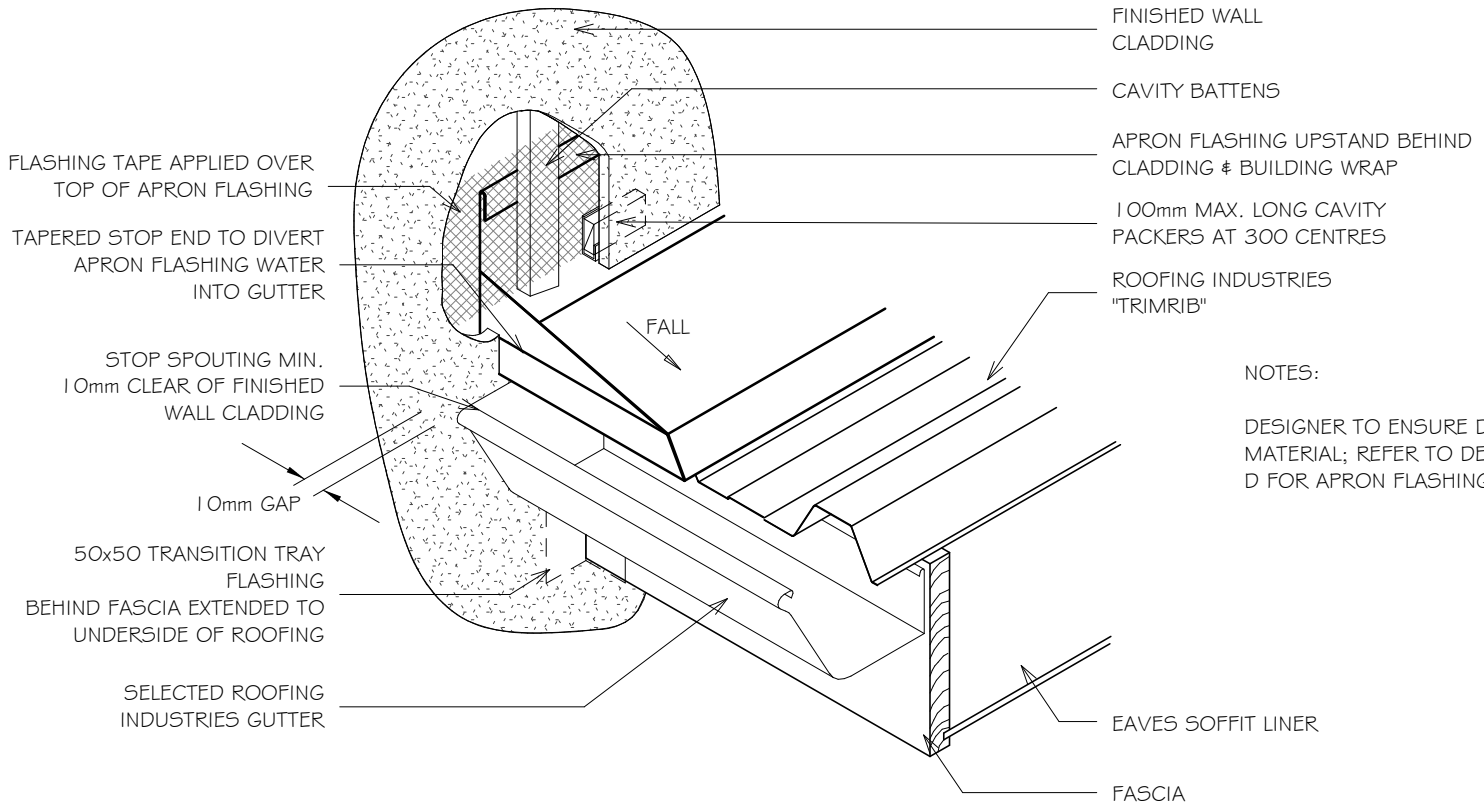

NOTES:

DESIGNER TO ENSURE DURABILITY OF FLASHING MATERIAL; REFER TO DETAILS RCR010A, B, C & D FOR APRON FLASHING DETAILS

NOTES:

- These details are generally in compliance with E2/AS1 and/or the NZ Metal Roof & Wall Cladding Code of Practice and in some cases specific details by 'Roofing Industries'.
- The building designer is ultimatley responsible to ensure that details used meet the requirements of the NZ Building Code for the specific project.
- Details of the supporting structure including cavity battens are indicative only and are the responsibility of the building designer. For steel framed buildings thermal break cavity battens may be required.
- Underlay selection and building wrap types are the responsibility of the designer, Netting or other support is generally required at roof pitches less than 8 degrees combined with a self supporting paper. At roof pitches of 8° and above where non self supporting paper is used or purlin spacing is in excess of self supporting criteria, netting or other support should be used. Alternative support to netting should be used in severe coastal environments including when aluminium is used.
- These details are for Roofing Industries profile/s as nominated and may not be applicable to other profiles.
- This drawing is the copyright of 'Roofing Industries' and can only be copied or reproduced with their permission.
- These details to be read with Roofing Industries profile technical summary regarding wind loads and fixings.
- Further information can be obtained from the NZ Metal Roof & Wall Cladding Code of Practice: www.metalroofing.org.nz OR NZBC clause E2/AS1.

Roofing Industries
roof.co.nz

RESIDENTIAL TRIMRIB® ROOFING
RAKING INTERNAL GUTTER

Detail Number: RI-RTR028A

Date drawn: 07/07/2017

Scale: 1 : 5@ A4

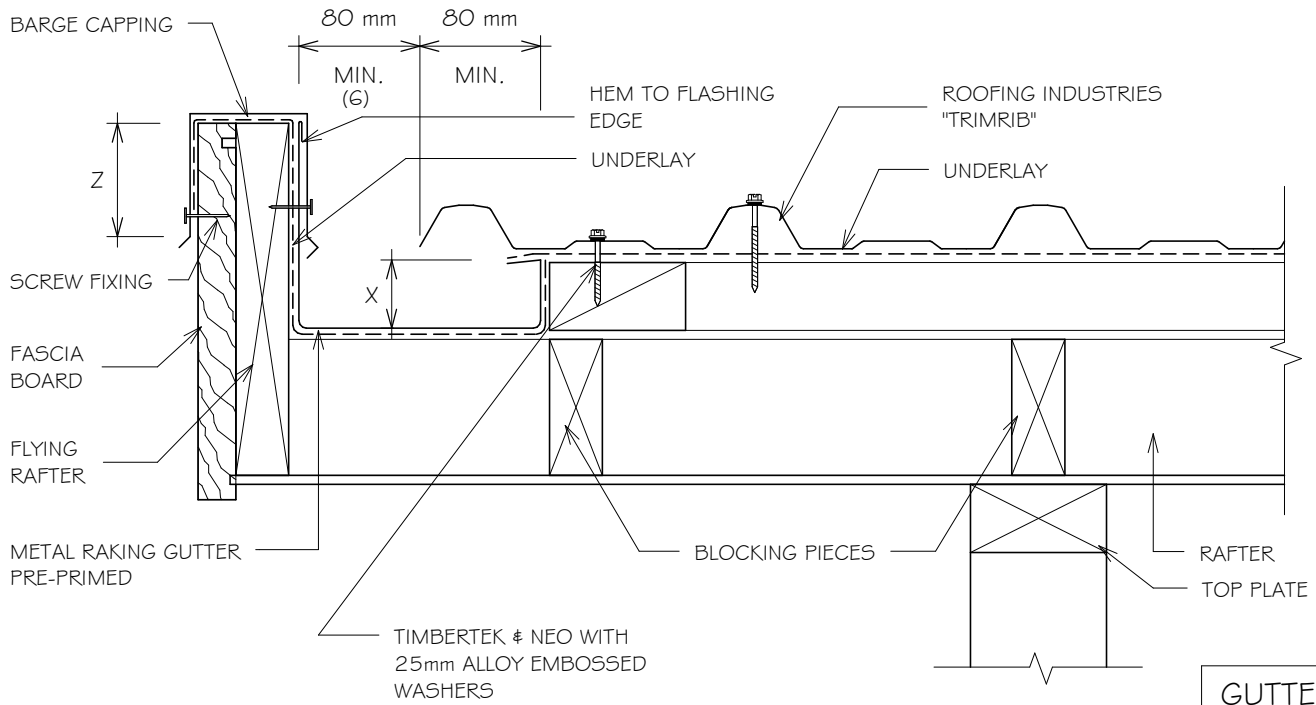

NOTES:

DESIGNER TO ENSURE DURABILITY OF FLASHING MATERIAL;

1. SITUATION 1: IN LOW, MEDIUM OR HIGH WIND ZONES, WHERE ROOF PITCH IS 10° OR GREATER
2. SITUATION 2: FOR ALL ROOF PITCHES IN VERY HIGH AND EXTRA HIGH WIND ZONES, FOR ALL WIND ZONES WHERE ROOF PITCH IS LESS THAN 10°.
3. SITUATION 3: FOR ALL ROOF PITCHES IN EXTRA HIGH WIND ZONES.
4. EXCLUDES DRIP EDGE.
5. INTERNAL GUTTER SHOULD BE MADE FROM NONFERROUS METAL COMPATIBLE WITH THE ROOFING MATERIAL
6. GUTTER SHALL BE SIZED TO SUIT THE ROOF CATCHMENT AREA BUT SHALL BE NO LESS THAN THAN SHOWN IN THIS FIGURE AND DESIGNED IN ACCORDANCE WITH E2/AS1 AND/OR THE NZ METAL ROOF & WALL CLADDING CODE OF PRACTICE.

SITE WIND ZONE (As per NZS3604)	MINIMUM Z
SITUATION 1 (1)	50 (4)
SITUATION 2 (2)	75 (4)
SITUATION 3 (3)	90 (4)

GUTTER DEPTH	
ROOF PITCH	(6) X min
< 12°	45
12° or greater	20

NOTES:

- These details are generally in compliance with E2/AS1 and/or the NZ Metal Roof & Wall Cladding Code of Practice and in some cases specific details by 'Roofing Industries'.
- The building designer is ultimatley responsible to ensure that details used meet the requirements of the NZ Building Code for the specific project.
- Details of the supporting structure including cavity battens are indicative only and are the responsibility of the building designer. For steel framed buildings thermal break cavity battens may be required.
- Underlay selection and building wrap types are the responsibility of the designer, Netting or other support is generally required at roof pitches less than 8 degrees combined with a self supporting paper. At roof pitches of 8° and above where non self supporting paper is used or purlin spacing is in excess of self supporting criteria, netting or other support should be used. Alternative support to netting should be used in severe coastal environments including when aluminium is used.
- These details are for Roofing Industries profile/s as nominated and may not be applicable to other profiles.
- This drawing is the copyright of 'Roofing Industries' and can only be copied or reproduced with their permission.
- These details to be read with Roofing Industries profile technical summary regarding wind loads and fixings.
- Further information can be obtained from the NZ Metal Roof & Wall Cladding Code of Practice: www.metalroofing.org.nz OR NZBC clause E2/AS1.

Roofing Industries
roof.co.nz

RESIDENTIAL TRIMRIB® ROOFING
ROOFING INDUSTRIES GUTTER OPTIONS QUARTER & 1/2 ROUND FOR TIMBER FASCIA

Detail Number: RI-RTR030A
Date drawn: 07/07/2017
Scale: 1 : 5@ A4

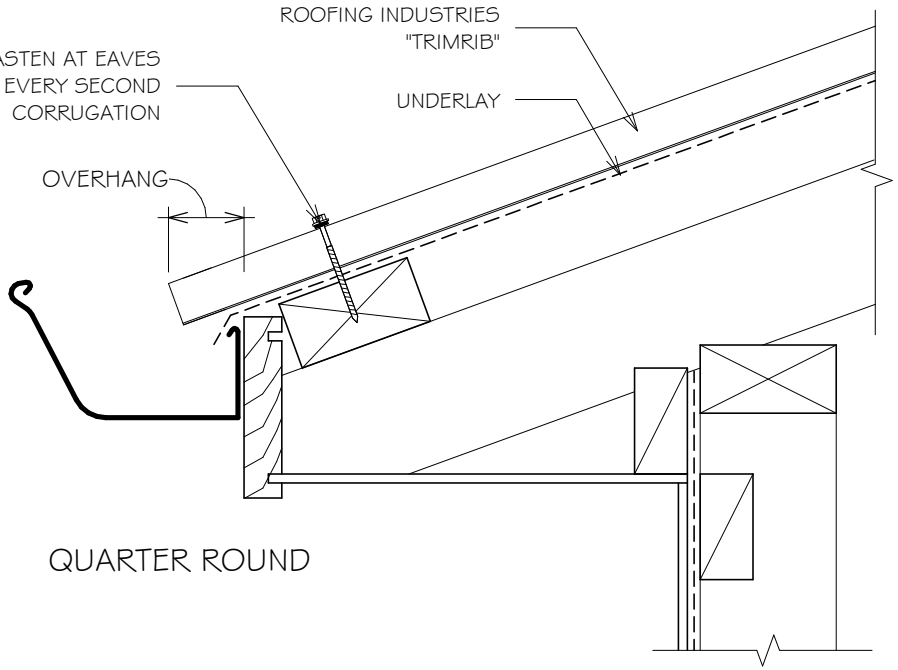

QUARTER ROUND

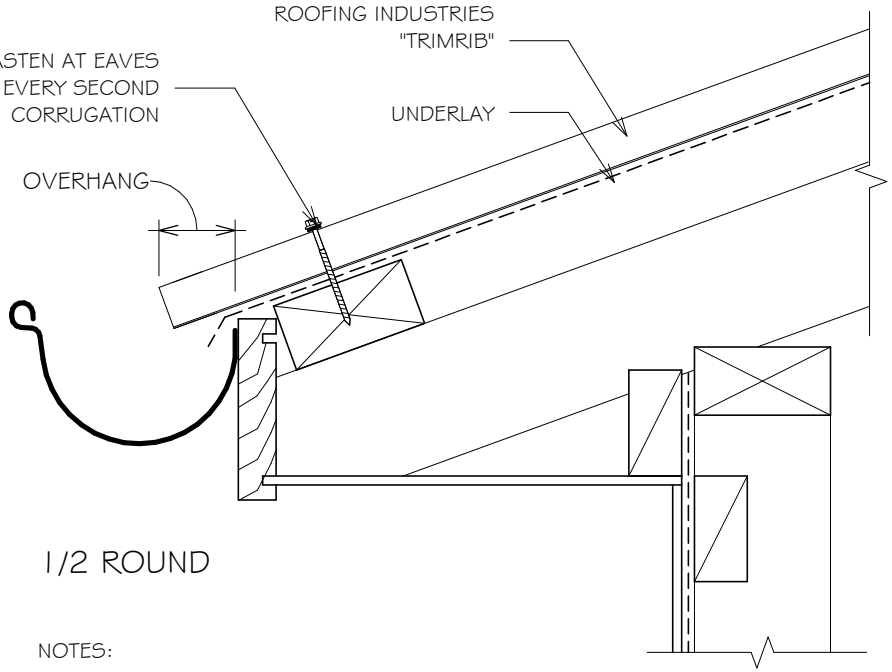

1/2 ROUND

NOTES:

1. GUTTER APRON FLASHINGS MAY BE REQUIRED AS PER DRAWING RTR004A
2. OVERHANG AS PER DRAWING RTR004A / MRM COP

NOTES:

- These details are generally in compliance with E2/AS1 and/or the NZ Metal Roof & Wall Cladding Code of Practice and in some cases specific details by 'Roofing Industries'.
- The building designer is ultimatley responsible to ensure that details used meet the requirements of the NZ Building Code for the specific project.
- Details of the supporting structure including cavity battens are indicative only and are the responsibility of the building designer. For steel framed buildings thermal break cavity battens may be required.
- Underlay selection and building wrap types are the responsibility of the designer, Netting or other support is generally required at roof pitches less than 8 degrees combined with a self supporting paper. At roof pitches of 8° and above where non self supporting paper is used or purlin spacing is in excess of self supporting criteria, netting or other support should be used. Alternative support to netting should be used in severe coastal environments including when aluminium is used.
- These details are for Roofing Industries profile/s as nominated and may not be applicable to other profiles.
- This drawing is the copyright of 'Roofing Industries' and can only be copied or reproduced with their permission.
- These details to be read with Roofing Industries profile technical summary regarding wind loads and fixings.
- Further information can be obtained from the NZ Metal Roof & Wall Cladding Code of Practice: www.metalroofing.org.nz OR NZBC clause E2/AS1.

Roofing Industries
roof.co.nz

RESIDENTIAL TRIMRIB® ROOFING
ROOFING INDUSTRIES GUTTER OPTIONS 125 BOX GUTTER & OLD GOTHIC FOR TIMBER FASCIA

Detail Number: RI-RTR030B
Date drawn: 07/07/2017
Scale: 1 : 5@ A4

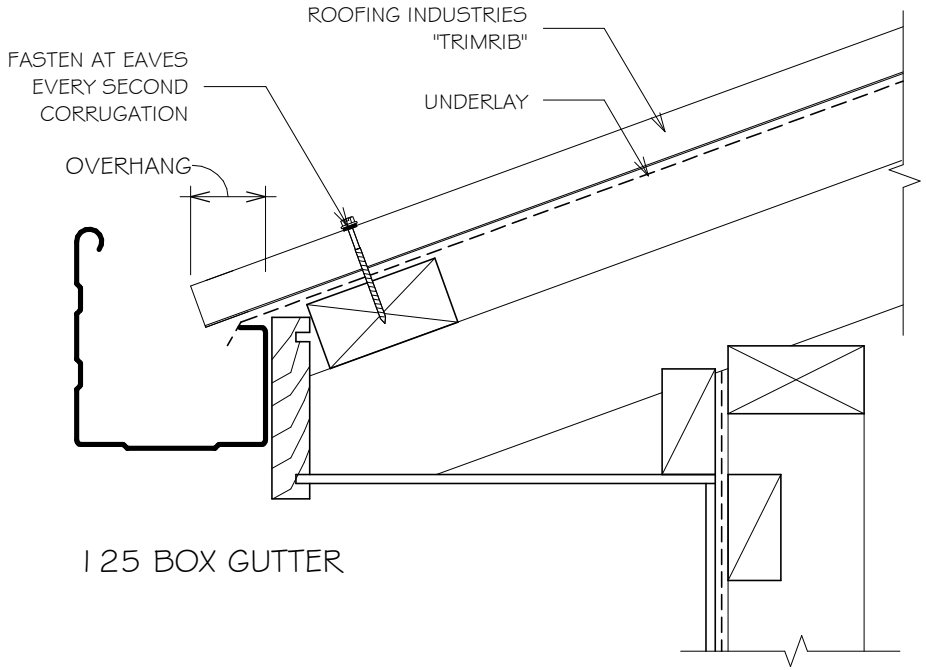

125 BOX GUTTER

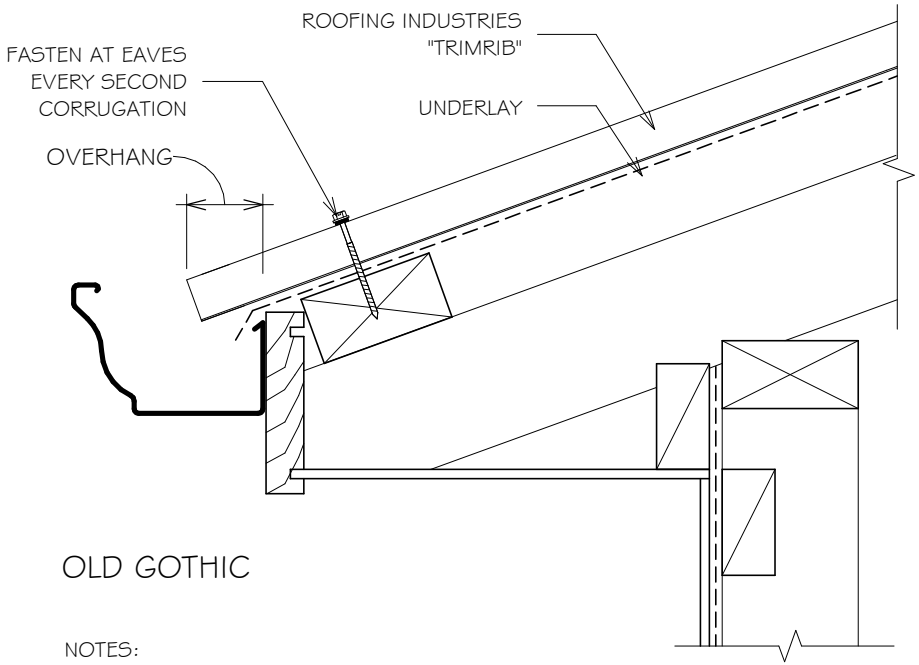

OLD GOTHIC

NOTES:

1. GUTTER APRON FLASHINGS MAY BE REQUIRED AS PER DRAWING RTR004A
2. OVERHANG AS PER DRAWING RTR004A / MRM COP

NOTES:

- These details are generally in compliance with E2/AS1 and/or the NZ Metal Roof & Wall Cladding Code of Practice and in some cases specific details by 'Roofing Industries'.
- The building designer is ultimatley responsible to ensure that details used meet the requirements of the NZ Building Code for the specific project.
- Details of the supporting structure including cavity battens are indicative only and are the responsibility of the building designer. For steel framed buildings thermal break cavity battens may be required.
- Underlay selection and building wrap types are the responsibility of the designer, Netting or other support is generally required at roof pitches less than 8 degrees combined with a self supporting paper. At roof pitches of 8° and above where non self supporting paper is used or purlin spacing is in excess of self supporting criteria, netting or other support should be used. Alternative support to netting should be used in severe coastal environments including when aluminium is used.
- These details are for Roofing Industries profile/s as nominated and may not be applicable to other profiles.
- This drawing is the copyright of 'Roofing Industries' and can only be copied or reproduced with their permission.
- These details to be read with Roofing Industries profile technical summary regarding wind loads and fixings.
- Further information can be obtained from the NZ Metal Roof & Wall Cladding Code of Practice: www.metalroofing.org.nz OR NZBC clause E2/AS1.

Roofing Industries
roof.co.nz

RESIDENTIAL TRIMRIB® WALL CLADDING
BARGE DETAIL FOR VERTICAL CLADDING ON CAVITY (KICK OUT)

Detail Number: RI-RTW001A-1

Date drawn: 07/07/2017

Scale: 1 : 5@ A4

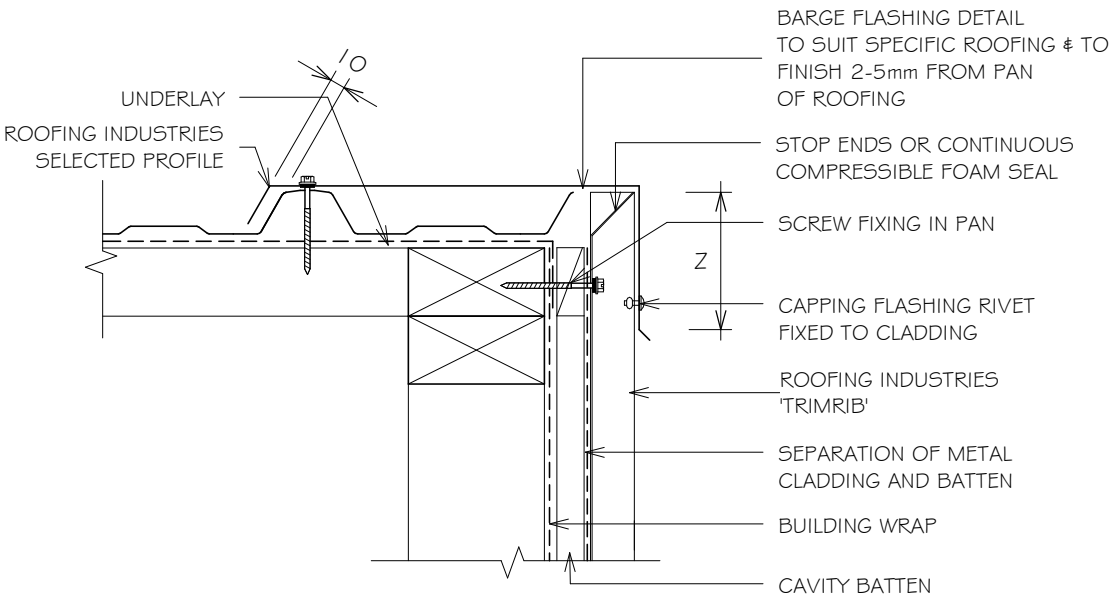

SITE WIND ZONE (As per NZS3604)	MINIMUM
	Z
SITUATION 1 (1)	75mm (3)
SITUATION 2 (2)	100mm (3)

NOTES:

1. SITUATION 1: IN LOW, MEDIUM OR HIGH WIND ZONES, WHERE ROOF PITCH IS 10° OR GREATER
2. SITUATION 2: FOR ALL ROOF PITCHES IN VERY HIGH & EXTRA HIGH WIND ZONES, FOR ALL WIND ZONES WHERE ROOF PITCH IS LESS THAN 10°.
3. EXCLUDING DRIP EDGE.
4. CAVITY BATTENS CONTAINING CORROSIVE MATERIAL MUST BE SEPARATED FROM METAL CLADDING BY DPC, BUILDING WRAP, PVC OR PAINTING
5. CASTELLATED BATTEN, DRAINAGE PLASTIC BATTEN OR APPROVED DRAINED BATTEN CAN BE USED WITH THIS SYSTEM

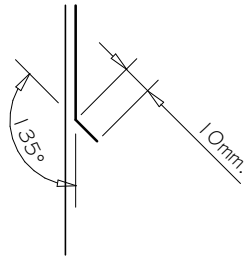

KICK-OUT at bottom edge of vertical flashing

NOTES:

- These details are generally in compliance with E2/AS1 and/or the NZ Metal Roof & Wall Cladding Code of Practice and in some cases specific details by 'Roofing Industries'.
- The building designer is ultimatley responsible to ensure that details used meet the requirements of the NZ Building Code for the specific project.
- Details of the supporting structure including cavity battens are indicative only and are the responsibility of the building designer. For steel framed buildings thermal break cavity battens may be required.
- Underlay selection and building wrap types are the responsibility of the designer. When rigid wall underlay is required it is the designers responsibility to ensure the correct type is used and follow the manufacturers recommendation for installation.
- These details are for Roofing Industries profile/s as nominated and may not be applicable to other profiles.
- This drawing is the copyright of 'Roofing Industries' and can only be copied or reproduced with their permission.
- Further information can be obtained from the NZ Metal Roof & Wall Cladding Code of Practice: www.metalroofing.org.nz OR NZBC clause E2/AS1.

Roofing Industries
roof.co.nz

RESIDENTIAL TRIMRIB® WALL CLADDING
BARGE DETAIL FOR VERTICAL CLADDING ON CAVITY (BIRDS BEAK)

Detail Number: RI-RTW001B-1
Date drawn: 07/07/2017
Scale: 1 : 5@ A4

SITE WIND ZONE (As per NZS3604)	MINIMUM Z
SITUATION 1 (1)	75mm (3)
SITUATION 2 (2)	100mm (3)

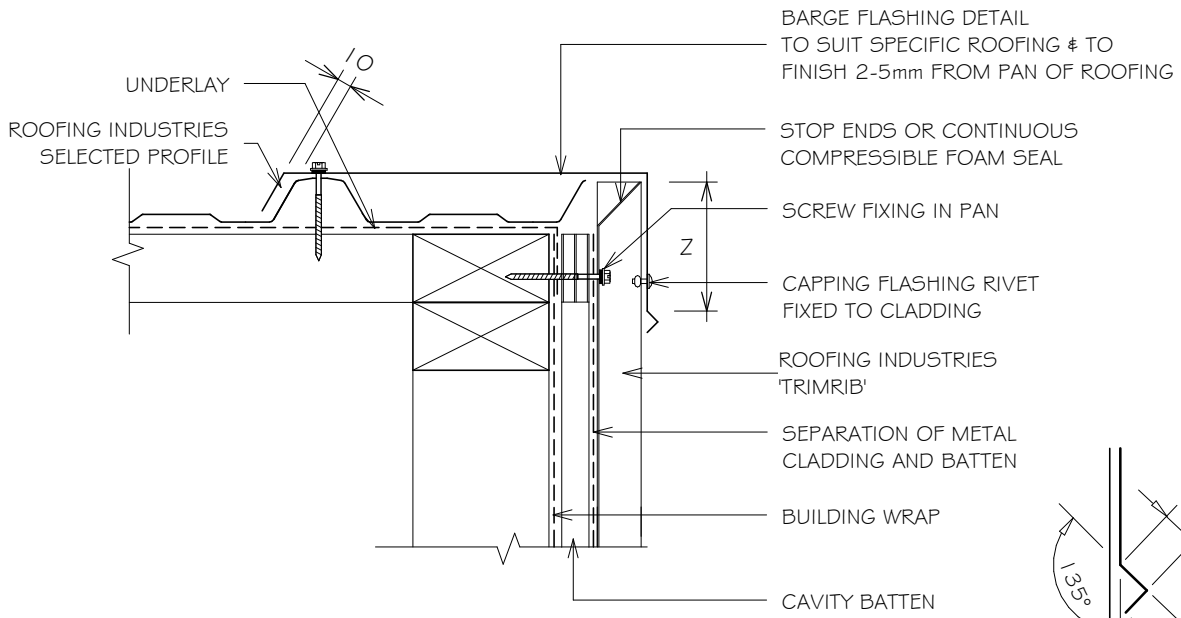

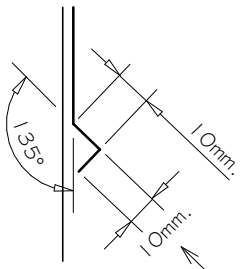

BIRD'S BEAK at bottom edge of vertical flashing

Bird's beak dimension may vary between manufacturing locations.

NOTES:

1. SITUATION 1: IN LOW, MEDIUM OR HIGH WIND ZONES, WHERE ROOF PITCH IS 10° OR GREATER
2. SITUATION 2: FOR ALL ROOF PITCHES IN VERY HIGH & EXTRA HIGH WIND ZONES, FOR ALL WIND ZONES WHERE ROOF PITCH IS LESS THAN 10°.
3. EXCLUDING DRIP EDGE.
4. CAVITY BATTENS CONTAINING CORROSIVE MATERIAL MUST BE SEPARATED FROM METAL CLADDING BY DPC, BUILDING WRAP, PVC OR PAINTING
5. CASTELLATED BATTEN, DRAINAGE PLASTIC BATTEN OR APPROVED DRAINED BATTEN CAN BE USED WITH THIS SYSTEM

NOTES:

- These details are generally in compliance with E2/AS1 and/or the NZ Metal Roof & Wall Cladding Code of Practice and in some cases specific details by 'Roofing Industries'.
- The building designer is ultimatley responsible to ensure that details used meet the requirements of the NZ Building Code for the specific project.
- Details of the supporting structure including cavity battens are indicative only and are the responsibility of the building designer. For steel framed buildings thermal break cavity battens may be required.
- Underlay selection and building wrap types are the responsibility of the designer. When rigid wall underlay is required it is the designers responsibility to ensure the correct type is used and follow the manufacturers recommendation for installation.
- These details are for Roofing Industries profile/s as nominated and may not be applicable to other profiles.
- This drawing is the copyright of 'Roofing Industries' and can only be copied or reproduced with their permission.
- Further information can be obtained from the NZ Metal Roof & Wall Cladding Code of Practice: www.metalroofing.org.nz OR NZBC clause E2/AS1.

Roofing Industries
roof.co.nz

RESIDENTIAL TRIMRIB® WALL CLADDING
HEAD BARGE FOR VERTICAL CLADDING ON CAVITY ON CAVITY (KICK OUT)

Detail Number: RI-RTW002A-1
Date drawn: 07/07/2017
Scale: 1 : 5@ A4

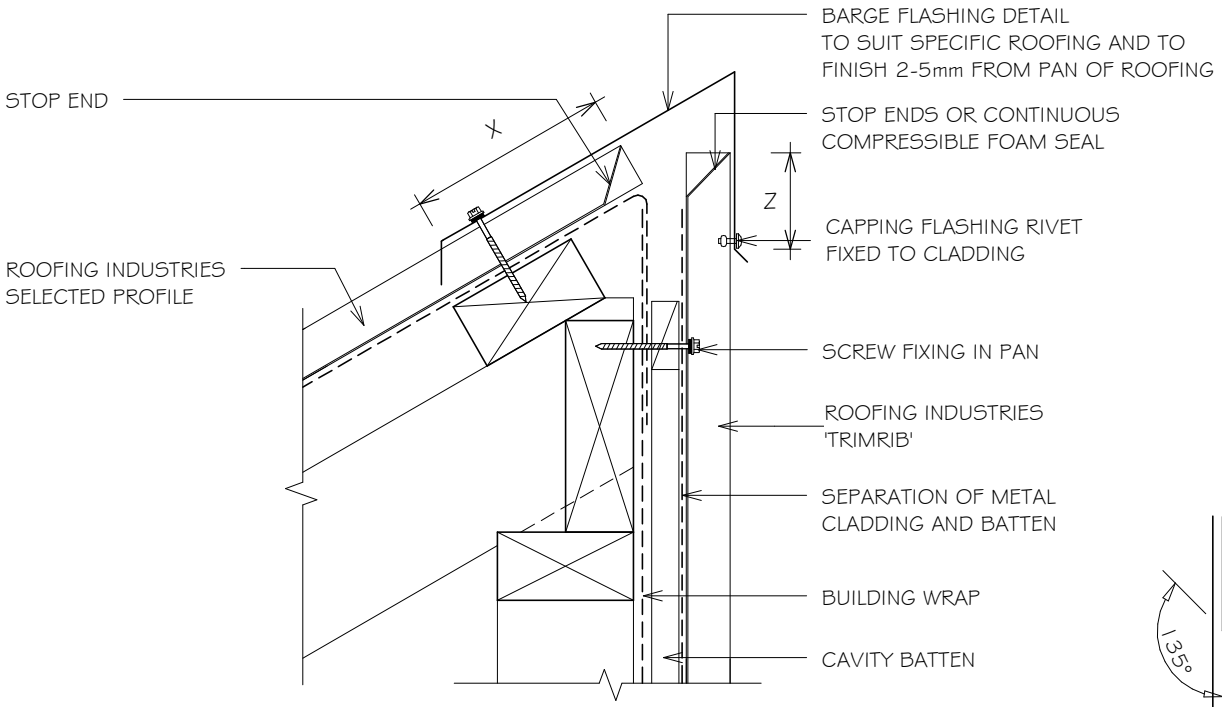

SITE WIND ZONE (As per NZS3604)	MINIMUM	
	Z	X (4)
SITUATION 1 (1)	75mm (3)	150mm
SITUATION 2 (2)	100mm(3)	200mm

NOTES:

1. SITUATION 1: IN LOW, MEDIUM OR HIGH WIND ZONES, WHERE ROOF PITCH IS 10° OR GREATER
2. SITUATION 2: FOR ALL ROOF PITCHES IN VERY HIGH & EXTRA HIGH WIND ZONES, FOR ALL WIND ZONES WHERE ROOF PITCH IS LESS THAN 10°.
3. BARGE COVER EXCLUDES DRIP EDGE.
4. EXCLUDING ANY SOFT EDGE OR TURN-DOWN TO ROOFING.
5. CAVITY BATTENS CONTAINING CORROSIVE MATERIAL MUST BE SEPARATED FROM METAL CLADDING BY DPC, BUILDING WRAP, PVC OR PAINTING
6. CASTELLATED BATTEN, DRAINAGE PLASTIC BATTEN OR APPROVED DRAINED BATTEN CAN BE USED WITH THIS SYSTEM

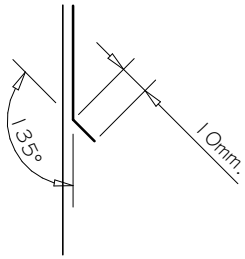

KICK-OUT at bottom
edge of vertical flashing

NOTES:

- These details are generally in compliance with E2/AS1 and/or the NZ Metal Roof & Wall Cladding Code of Practice and in some cases specific details by 'Roofing Industries'.
- The building designer is ultimatley responsible to ensure that details used meet the requirements of the NZ Building Code for the specific project.
- Details of the supporting structure including cavity battens are indicative only and are the responsibility of the building designer. For steel framed buildings thermal break cavity battens may be required.
- Underlay selection and building wrap types are the responsibility of the designer. When rigid wall underlay is required it is the designers responsibility to ensure the correct type is used and follow the manufacturers recommendation for installation.
- These details are for Roofing Industries profile/s as nominated and may not be applicable to other profiles.
- This drawing is the copyright of 'Roofing Industries' and can only be copied or reproduced with their permission.
- Further information can be obtained from the NZ Metal Roof & Wall Cladding Code of Practice: www.metalroofing.org.nz OR NZBC clause E2/AS1.

Roofing Industries
roof.co.nz

RESIDENTIAL TRIMRIB® WALL CLADDING
HEAD BARGE FOR VERTICAL CLADDING ON CAVITY (BIRDS BEAK)

Detail Number: RI-RTW002B-1

Date drawn: 07/07/2017

Scale: 1 : 5@ A4

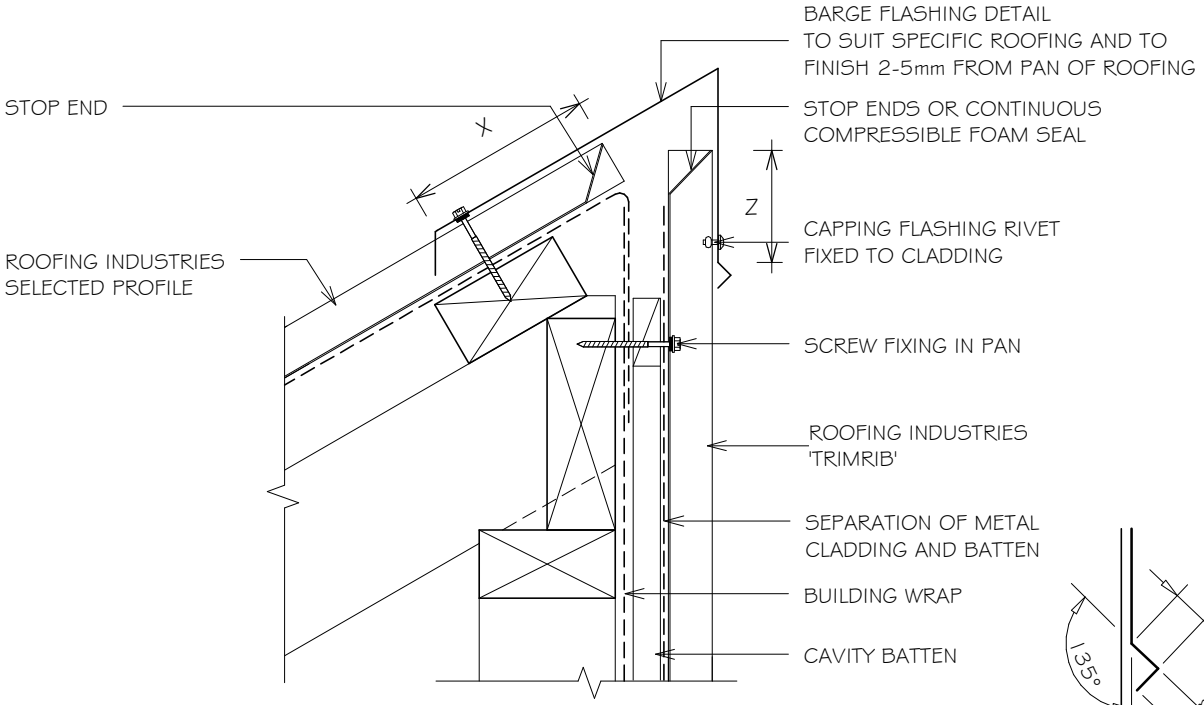

SITE WIND ZONE (As per NZS3604)	MINIMUM	
	Z	X (4)
SITUATION 1 (1)	75mm (3)	150mm
SITUATION 2 (2)	100mm(3)	200mm

NOTES:

1. SITUATION 1: IN LOW, MEDIUM OR HIGH WIND ZONES, WHERE ROOF PITCH IS 10° OR GREATER
2. SITUATION 2: FOR ALL ROOF PITCHES IN VERY HIGH & EXTRA HIGH WIND ZONES, FOR ALL WIND ZONES WHERE ROOF PITCH IS LESS THAN 10°.
3. BARGE COVER EXCLUDES DRIP EDGE.
4. EXCLUDING ANY SOFT EDGE OR TURN-DOWN TO ROOFING.
5. CAVITY BATTENS CONTAINING CORROSIVE MATERIAL MUST BE SEPARATED FROM METAL CLADDING BY DPC, BUILDING WRAP, PVC OR PAINTING
6. CASTELLATED BATTEN, DRAINAGE PLASTIC BATTEN OR APPROVED DRAINED BATTEN CAN BE USED WITH THIS SYSTEM

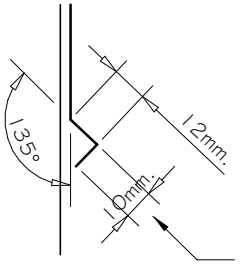

Bird's beak dimension may vary between manufacturing locations.

BIRD'S BEAK at bottom edge of vertical flashing

NOTES:

- These details are generally in compliance with E2/AS1 and/or the NZ Metal Roof & Wall Cladding Code of Practice and in some cases specific details by 'Roofing Industries'.
- The building designer is ultimatley responsible to ensure that details used meet the requirements of the NZ Building Code for the specific project.
- Details of the supporting structure including cavity battens are indicative only and are the responsibility of the building designer. For steel framed buildings thermal break cavity battens may be required.
- Underlay selection and building wrap types are the responsibility of the designer. When rigid wall underlay is required it is the designers responsibility to ensure the correct type is used and follow the manufacturers recommendation for installation.
- These details are for Roofing Industries profile/s as nominated and may not be applicable to other profiles.
- This drawing is the copyright of 'Roofing Industries' and can only be copied or reproduced with their permission.
- Further information can be obtained from the NZ Metal Roof & Wall Cladding Code of Practice: www.metalroofing.org.nz OR NZBC clause E2/AS1.

Roofing Industries
roof.co.nz

RESIDENTIAL TRIMRIB® WALL CLADDING STANDARD EXTERNAL CORNER FOR VERTICAL CLADDING ON CAVITY

Detail Number: RI-RTW003A-1

Date drawn: 07/07/2017

Scale: 1 : 5@ A4

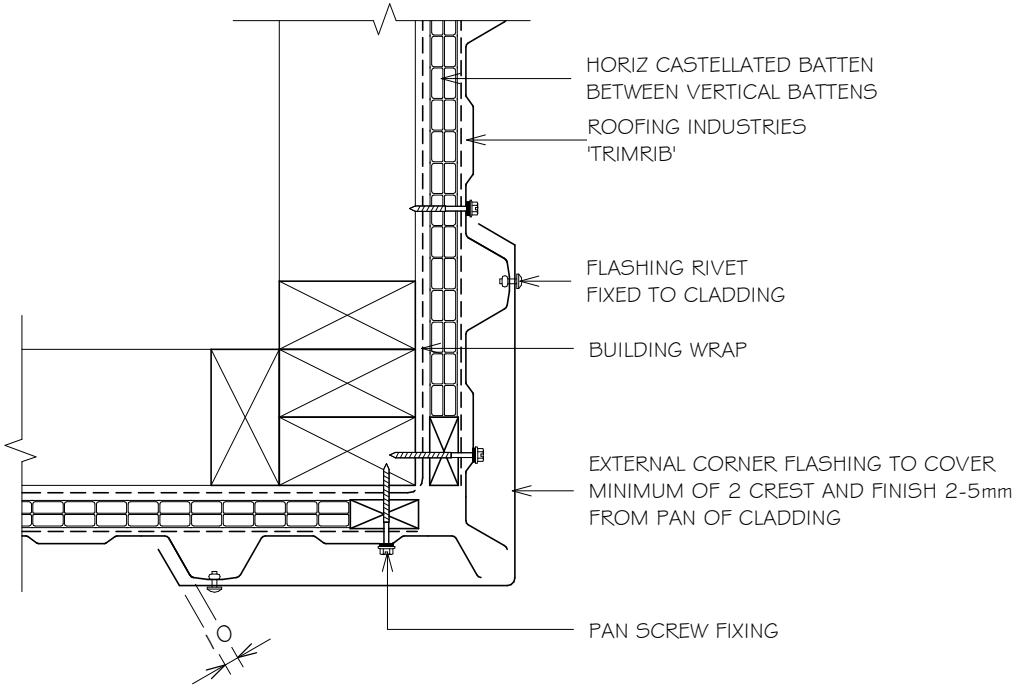

NOTES:

1. CAVITY BATTENS CONTAINING CORROSIVE MATERIAL MUST BE SEPARATED FROM METAL CLADDING BY DPC, BUILDING WRAP, PVC OR PAINTING
2. CASTELLATED BATTEN, DRAINAGE PLASTIC BATTEN OR APPROVED DRAINED BATTEN CAN BE USED WITH THIS SYSTEM

NOTES:

- These details are generally in compliance with E2/AS1 and/or the NZ Metal Roof & Wall Cladding Code of Practice and in some cases specific details by 'Roofing Industries'.
- The building designer is ultimatley responsible to ensure that details used meet the requirements of the NZ Building Code for the specific project.
- Details of the supporting structure including cavity battens are indicative only and are the responsibility of the building designer. For steel framed buildings thermal break cavity battens may be required.
- Underlay selection and building wrap types are the responsibility of the designer. When rigid wall underlay is required it is the designers responsibility to ensure the correct type is used and follow the manufacturers recommendation for installation.
- These details are for Roofing Industries profile/s as nominated and may not be applicable to other profiles.
- This drawing is the copyright of 'Roofing Industries' and can only be copied or reproduced with their permission.
- Further information can be obtained from the NZ Metal Roof & Wall Cladding Code of Practice: www.metalroofing.org.nz OR NZBC clause E2/AS1.

Roofing Industries roof.co.nz

RESIDENTIAL TRIMRIB® WALL CLADDING
EXTERNAL CORNER FOR VERTICAL CLADDING ON CAVITY WITH CLADDING CHANGE

Detail Number: RI-RTW003B-1

Date drawn: 07/07/2017

Scale: 1 : 5@ A4

NOTES:

1. CAVITY BATTENS CONTAINING CORROSIVE MATERIAL MUST BE SEPARATED FROM METAL CLADDING BY DPC, BUILDING WRAP, PVC OR PAINTING
2. CASTELLATED BATTEN, DRAINAGE PLASTIC BATTEN OR APPROVED DRAINED BATTEN CAN BE USED WITH THIS SYSTEM

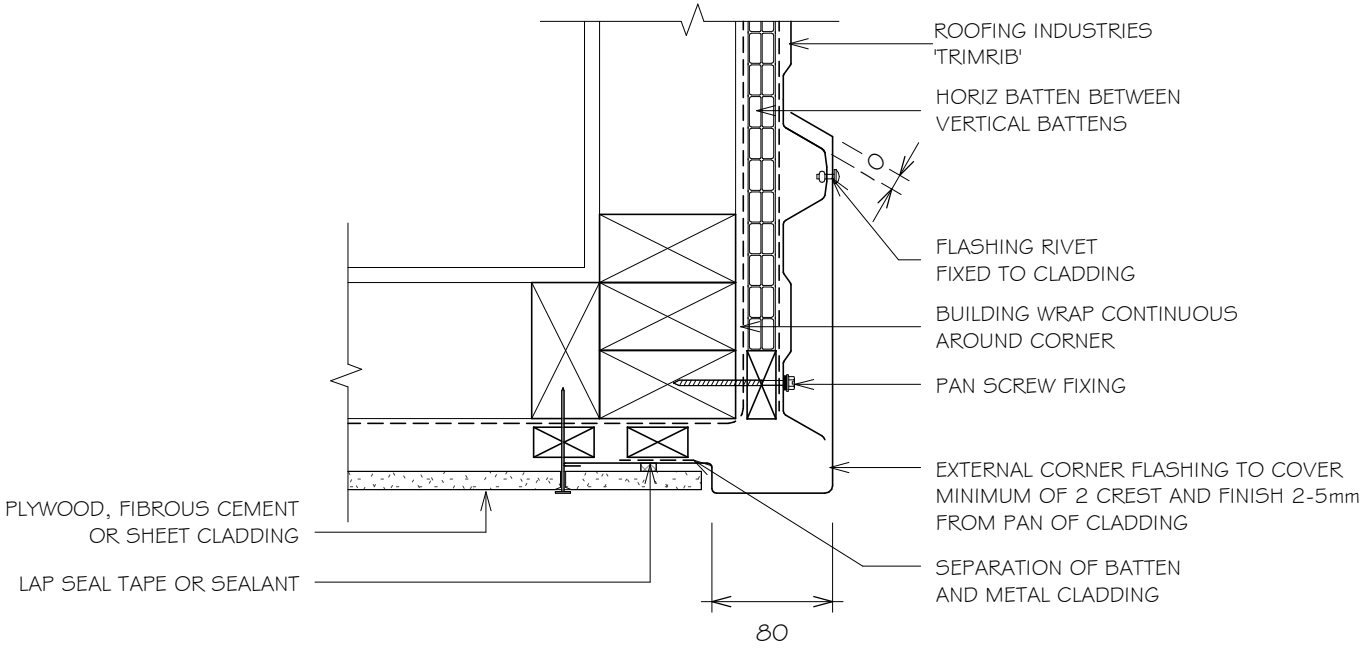

NOTES:

- These details are generally in compliance with E2/AS1 and/or the NZ Metal Roof & Wall Cladding Code of Practice and in some cases specific details by 'Roofing Industries'.
- The building designer is ultimatley responsible to ensure that details used meet the requirements of the NZ Building Code for the specific project.
- Details of the supporting structure including cavity battens are indicative only and are the responsibility of the building designer. For steel framed buildings thermal break cavity battens may be required.
- Underlay selection and building wrap types are the responsibility of the designer. When rigid wall underlay is required it is the designers responsibility to ensure the correct type is used and follow the manufacturers recommendation for installation.
- These details are for Roofing Industries profile/s as nominated and may not be applicable to other profiles.
- This drawing is the copyright of 'Roofing Industries' and can only be copied or reproduced with their permission.
- Further information can be obtained from the NZ Metal Roof & Wall Cladding Code of Practice: www.metalroofing.org.nz OR NZBC clause E2/AS1.

Roofing Industries
roof.co.nz

RESIDENTIAL TRIMRIB® WALL CLADDING STANDARD INTERNAL CORNER FOR VERTICAL CLADDING ON CAVITY

Detail Number: RI-RTW004A-1

Date drawn: 07/07/2017

Scale: 1 : 5@ A4

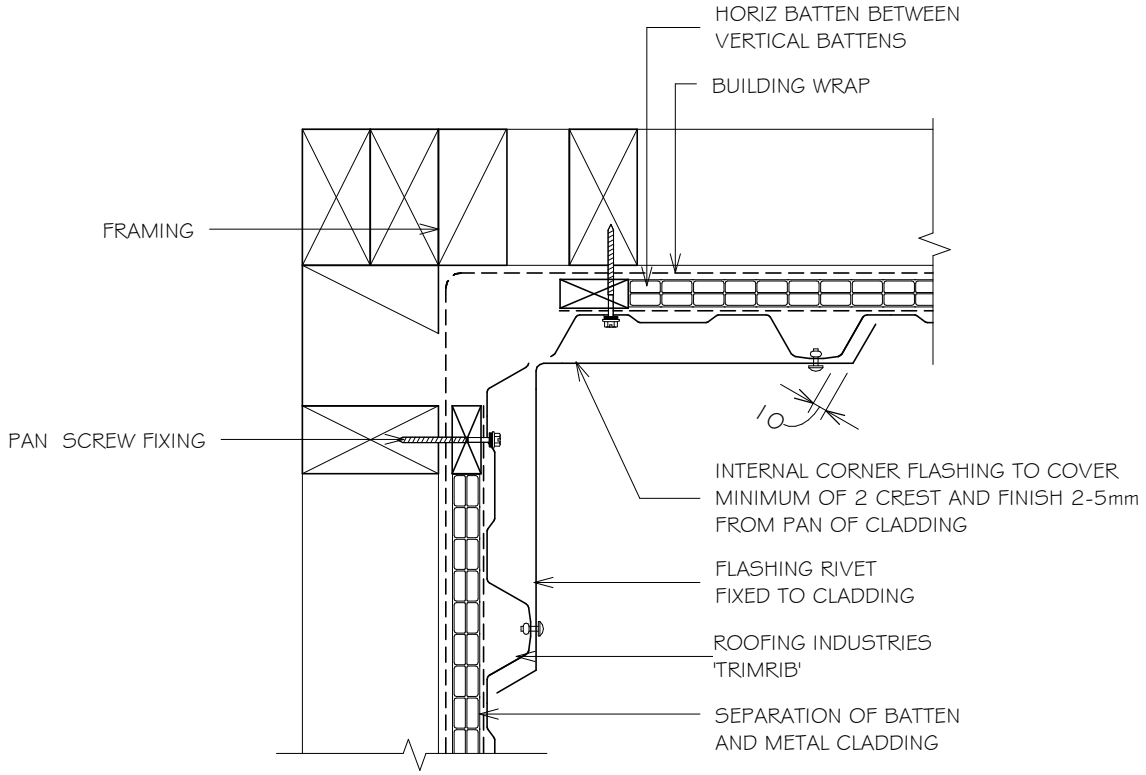

NOTES:

1. CAVITY BATTENS CONTAINING CORROSIVE MATERIAL MUST BE SEPARATED FROM METAL CLADDING BY DPC, BUILDING WRAP, PVC OR PAINTING
2. CASTELLATED BATTEN, DRAINAGE PLASTIC BATTEN OR APPROVED DRAINED BATTEN CAN BE USED WITH THIS SYSTEM

NOTES:

- These details are generally in compliance with E2/AS1 and/or the NZ Metal Roof & Wall Cladding Code of Practice and in some cases specific details by 'Roofing Industries'.
- The building designer is ultimatley responsible to ensure that details used meet the requirements of the NZ Building Code for the specific project.
- Details of the supporting structure including cavity battens are indicative only and are the responsibility of the building designer. For steel framed buildings thermal break cavity battens may be required.
- Underlay selection and building wrap types are the responsibility of the designer. When rigid wall underlay is required it is the designers responsibility to ensure the correct type is used and follow the manufacturers recommendation for installation.
- These details are for Roofing Industries profile/s as nominated and may not be applicable to other profiles.
- This drawing is the copyright of 'Roofing Industries' and can only be copied or reproduced with their permission.
- Further information can be obtained from the NZ Metal Roof & Wall Cladding Code of Practice: www.metalroofing.org.nz OR NZBC clause E2/AS1.

Roofing Industries
roof.co.nz

RESIDENTIAL TRIMRIB® WALL CLADDING
INTERNAL CORNER FOR VERTICAL CLADDING WITH CLADDING CHANGE

Detail Number: RI-RTW004B-1

Date drawn: 07/07/2017

Scale: 1 : 5@ A4

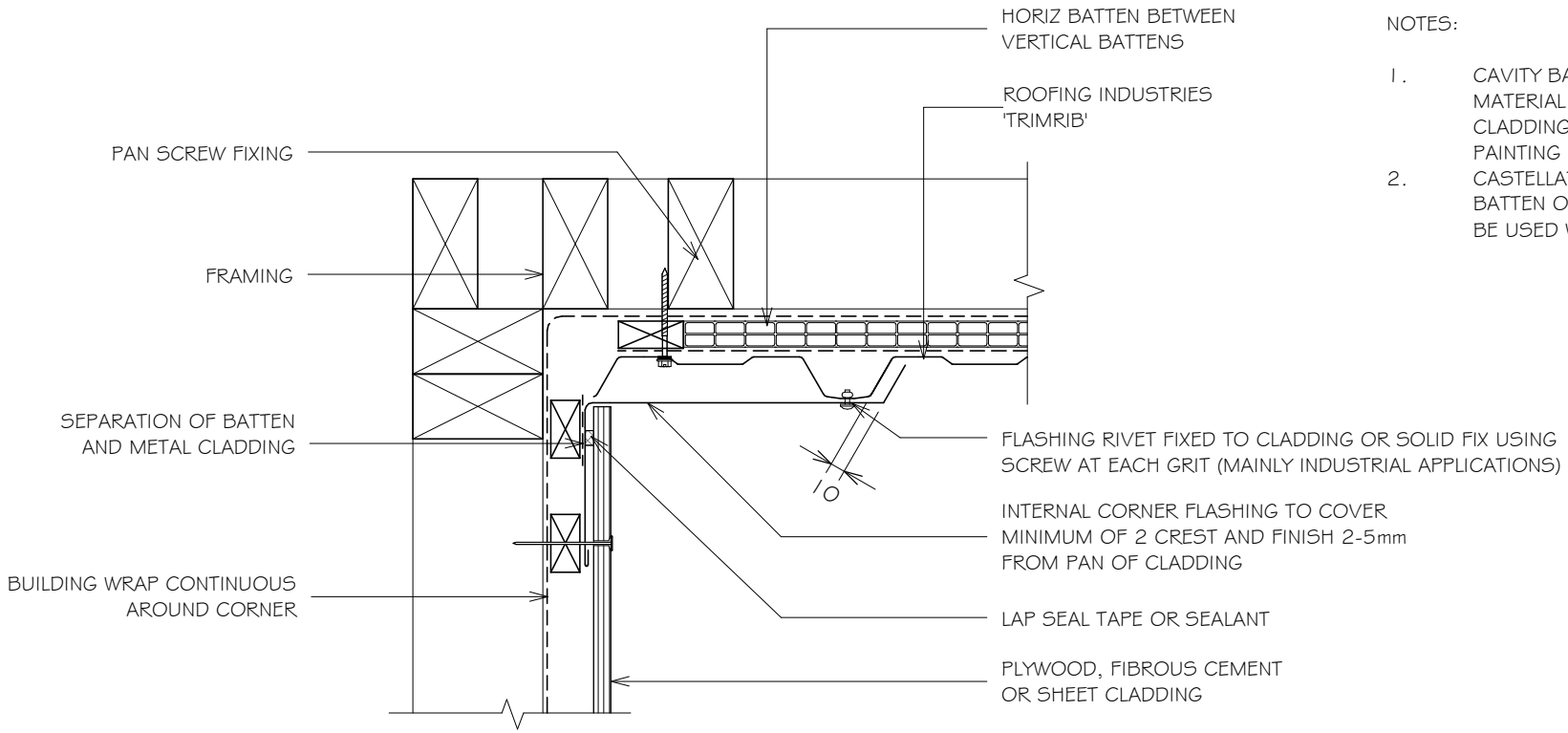

NOTES:

1. CAVITY BATTENS CONTAINING CORROSIVE MATERIAL MUST BE SEPARATED FROM METAL CLADDING BY DPC, BUILDING WRAP, PVC OR PAINTING
2. CASTELLATED BATTEN, DRAINAGE PLASTIC BATTEN OR APPROVED DRAINED BATTEN CAN BE USED WITH THIS SYSTEM

NOTES:

- These details are generally in compliance with E2/AS1 and/or the NZ Metal Roof & Wall Cladding Code of Practice and in some cases specific details by 'Roofing Industries'.
- The building designer is ultimatley responsible to ensure that details used meet the requirements of the NZ Building Code for the specific project.
- Details of the supporting structure including cavity battens are indicative only and are the responsibility of the building designer. For steel framed buildings thermal break cavity battens may be required.
- Underlay selection and building wrap types are the responsibility of the designer. When rigid wall underlay is required it is the designers responsibility to ensure the correct type is used and follow the manufacturers recommendation for installation.
- These details are for Roofing Industries profile/s as nominated and may not be applicable to other profiles.
- This drawing is the copyright of 'Roofing Industries' and can only be copied or reproduced with their permission.
- Further information can be obtained from the NZ Metal Roof & Wall Cladding Code of Practice: www.metalroofing.org.nz OR NZBC clause E2/AS1.

Roofing Industries
roof.co.nz

RESIDENTIAL TRIMRIB® WALL CLADDING
BOTTOM OF CLADDING FOR VERTICAL TRIMRIB ON CAVITY

Detail Number: RI-RTW005A-1
Date drawn: 07/07/2017
Scale: 1 : 5@ A4

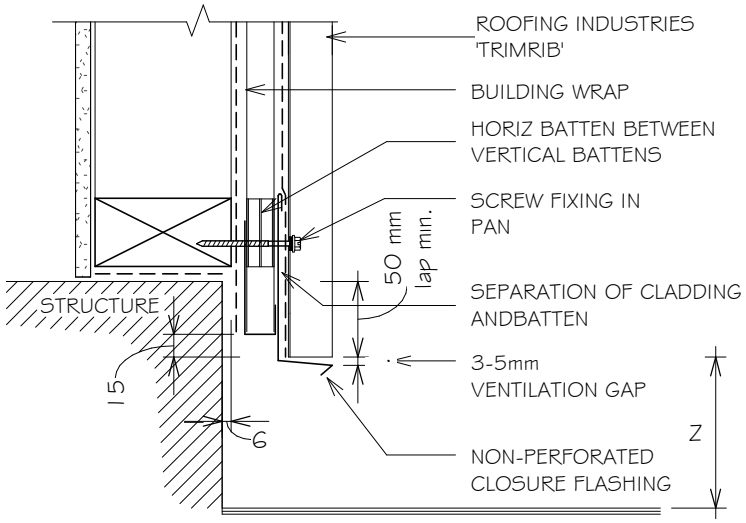

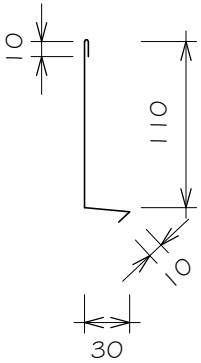

OPTION 01

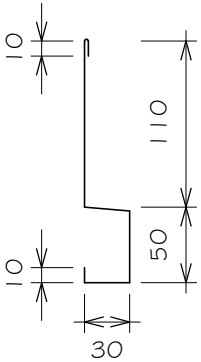

OPTION 02

SET DOWN	MINIMUM
	Z
PAVED SURFACE	100mm
UNPAVED SURFACE	175mm

NOTE:

1. THE BOTTOM EDGE OF THE CLADDING SHALL OVERLAP THE FOUNDATION WALL
2. CAVITY BATTENS CONTAINING CORROSIVE MATERIAL MUST BE SEPARATED FROM METAL CLADDING BY DPC, BUILDING WRAP, PVC OR PAINTING
3. CASTELLATED BATTEN, DRAINAGE PLASTIC BATTEN OR APPROVED DRAINED BATTEN CAN BE USED WITH THIS SYSTEM

NOTES:

- These details are generally in compliance with E2/AS1 and/or the NZ Metal Roof & Wall Cladding Code of Practice and in some cases specific details by 'Roofing Industries'.
- The building designer is ultimatley responsible to ensure that details used meet the requirements of the NZ Building Code for the specific project.
- Details of the supporting structure including cavity battens are indicative only and are the responsibility of the building designer. For steel framed buildings thermal break cavity battens may be required.
- Underlay selection and building wrap types are the responsibility of the designer. When rigid wall underlay is required it is the designers responsibility to ensure the correct type is used and follow the manufacturers recommendation for installation.
- These details are for Roofing Industries profile/s as nominated and may not be applicable to other profiles.
- This drawing is the copyright of 'Roofing Industries' and can only be copied or reproduced with their permission.
- Further information can be obtained from the NZ Metal Roof & Wall Cladding Code of Practice: www.metalroofing.org.nz OR NZBC clause E2/AS1.

Roofing Industries
roof.co.nz

RESIDENTIAL TRIMRIB® WALL CLADDING
SOFFIT FLASHING FOR VERTICAL TRIMRIB ON CAVITY

Detail Number: RI-RTW006A-1

Date drawn: 07/07/2017

Scale: 1 : 5@ A4

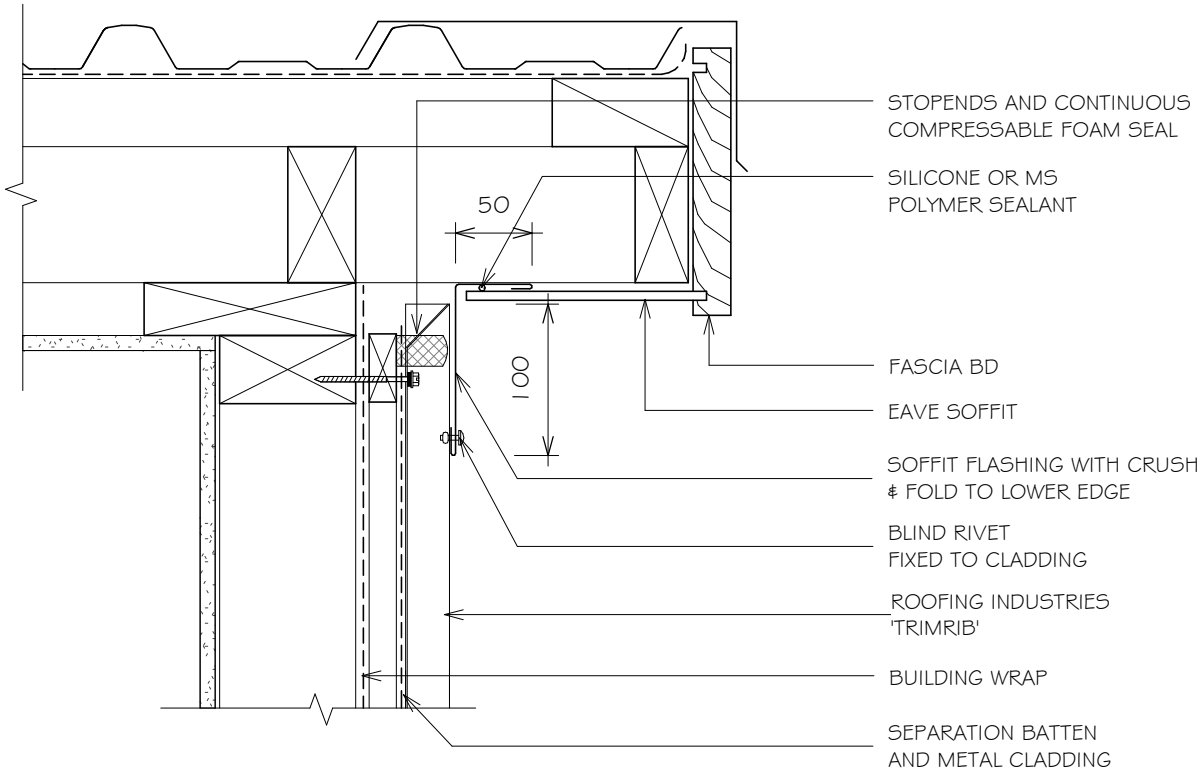

NOTES:

1. CAVITY BATTENS CONTAINING CORROSIVE MATERIAL MUST BE SEPARATED FROM METAL CLADDING BY DPC, BUILDING WRAP, PVC OR PAINTING
2. CASTELLATED BATTEN, DRAINAGE PLASTIC BATTEN OR APPROVED DRAINED BATTEN CAN BE USED WITH THIS SYSTEM

FLASHING OPTION 1

FLASHING OPTION 2

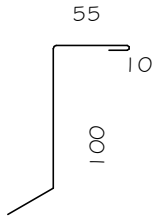

NOTCH CLEAR OF PAN 2-5mm

NOTES:

- These details are generally in compliance with E2/AS1 and/or the NZ Metal Roof & Wall Cladding Code of Practice and in some cases specific details by 'Roofing Industries'.
- The building designer is ultimatley responsible to ensure that details used meet the requirements of the NZ Building Code for the specific project.
- Details of the supporting structure including cavity battens are indicative only and are the responsibility of the building designer. For steel framed buildings thermal break cavity battens may be required.
- Underlay selection and building wrap types are the responsibility of the designer. When rigid wall underlay is required it is the designers responsibility to ensure the correct type is used and follow the manufacturers recommendation for installation.
- These details are for Roofing Industries profile/s as nominated and may not be applicable to other profiles.
- This drawing is the copyright of 'Roofing Industries' and can only be copied or reproduced with their permission.
- Further information can be obtained from the NZ Metal Roof & Wall Cladding Code of Practice: www.metalroofing.org.nz OR NZBC clause E2/AS1.

Roofing Industries
roof.co.nz

RESIDENTIAL TRIMRIB® WALL CLADDING
SLOPING SOFFIT FLASHING FOR VERTICAL TRIMRIB ON CAVITY

Detail Number: RI-RTW007A-1

Date drawn: 07/07/2017

Scale: 1 : 5@ A4

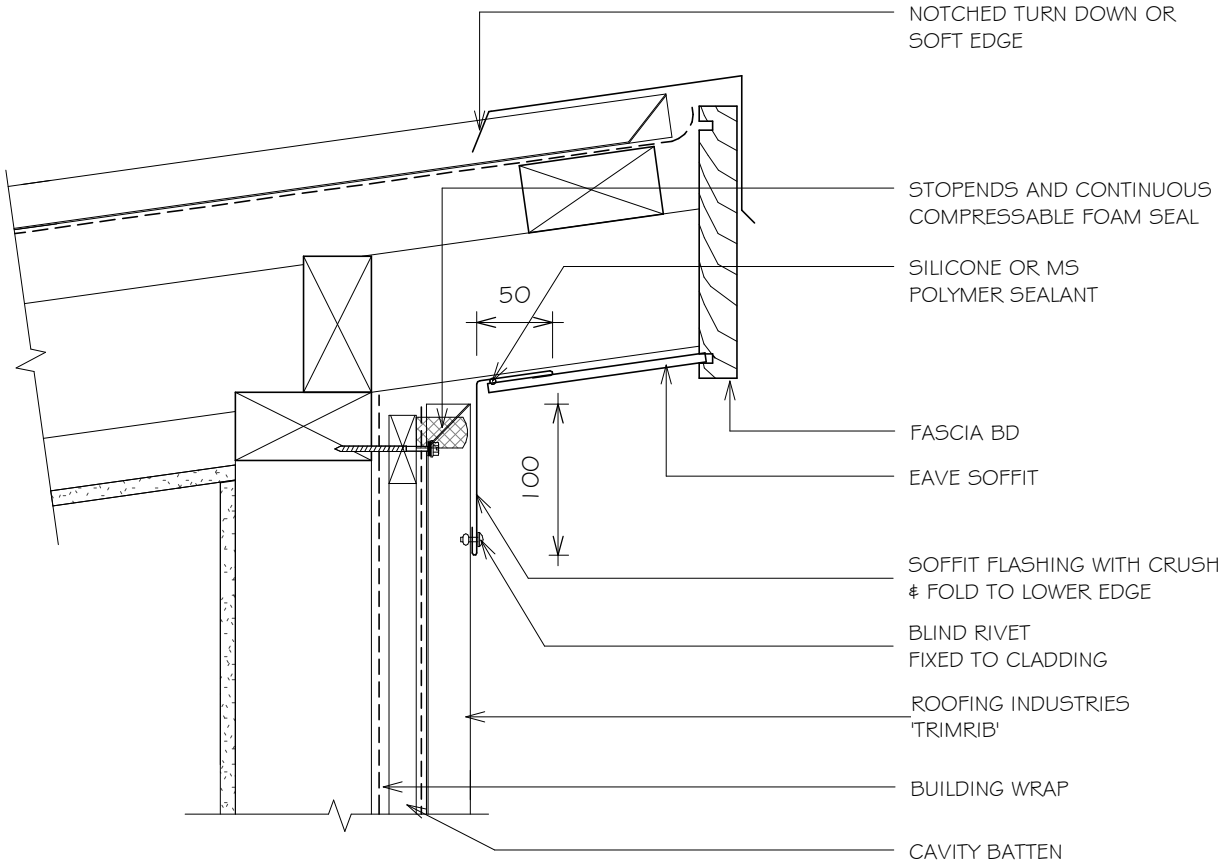

NOTES:

1. CAVITY BATTENS CONTAINING CORROSIVE MATERIAL MUST BE SEPARATED FROM METAL CLADDING BY DPC, BUILDING WRAP, PVC OR PAINTING
2. CASTELLATED BATTEN, DRAINAGE PLASTIC BATTEN OR APPROVED DRAINED BATTEN CAN BE USED WITH THIS SYSTEM

FLASHING OPTION 1

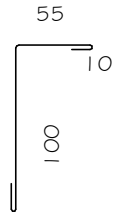

FLASHING OPTION 2

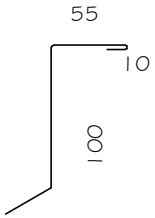

NOTCH CLEAR OF PAN 2-5mm

NOTES:

- These details are generally in compliance with E2/AS1 and/or the NZ Metal Roof & Wall Cladding Code of Practice and in some cases specific details by 'Roofing Industries'.
- The building designer is ultimatley responsible to ensure that details used meet the requirements of the NZ Building Code for the specific project.
- Details of the supporting structure including cavity battens are indicative only and are the responsibility of the building designer. For steel framed buildings thermal break cavity battens may be required.
- Underlay selection and building wrap types are the responsibility of the designer. When rigid wall underlay is required it is the designers responsibility to ensure the correct type is used and follow the manufacturers recommendation for installation.
- These details are for Roofing Industries profile/s as nominated and may not be applicable to other profiles.
- This drawing is the copyright of 'Roofing Industries' and can only be copied or reproduced with their permission.
- Further information can be obtained from the NZ Metal Roof & Wall Cladding Code of Practice: www.metalroofing.org.nz OR NZBC clause E2/AS1.

Roofing Industries
roof.co.nz

RESIDENTIAL TRIMRIB® WALL CLADDING
VERTICAL BUTT JOINT - VERTICAL CLADDING ON CAVITY WITH CLADDING CHANGE (DIRECT FIXED)

Detail Number: RI-RTW009A-1

Date drawn: 07/07/2017

Scale: 1 : 5@ A4

NOTES:

1. CAVITY BATTENS CONTAINING CORROSIVE MATERIAL MUST BE SEPARATED FROM METAL CLADDING BY DPC, BUILDING WRAP, PVC OR PAINTING
2. CASTELLATED BATTEN, DRAINAGE PLASTIC BATTEN OR APPROVED DRAINED BATTEN CAN BE USED WITH THIS SYSTEM

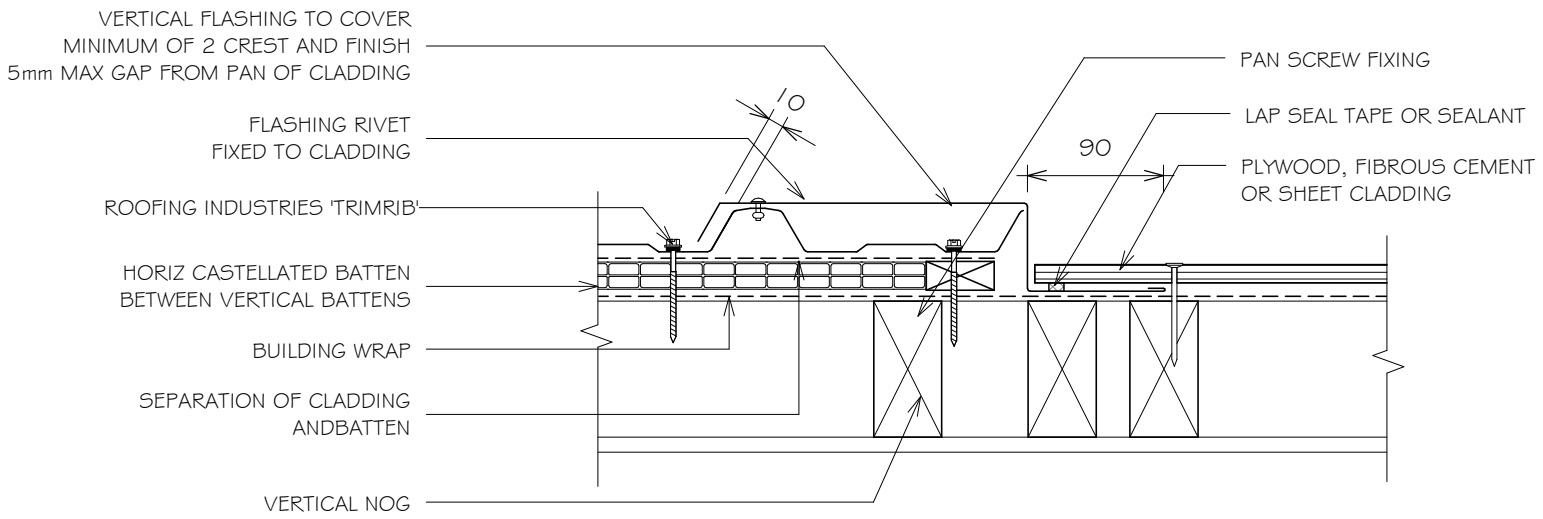

NOTES:

- These details are generally in compliance with E2/AS1 and/or the NZ Metal Roof & Wall Cladding Code of Practice and in some cases specific details by 'Roofing Industries'.
- The building designer is ultimatley responsible to ensure that details used meet the requirements of the NZ Building Code for the specific project.
- Details of the supporting structure including cavity battens are indicative only and are the responsibility of the building designer. For steel framed buildings thermal break cavity battens may be required.
- Underlay selection and building wrap types are the responsibility of the designer. When rigid wall underlay is required it is the designers responsibility to ensure the correct type is used and follow the manufacturers recommendation for installation.
- These details are for Roofing Industries profile/s as nominated and may not be applicable to other profiles.
- This drawing is the copyright of 'Roofing Industries' and can only be copied or reproduced with their permission.
- Further information can be obtained from the NZ Metal Roof & Wall Cladding Code of Practice: www.metalroofing.org.nz OR NZBC clause E2/AS1.

Roofing Industries
roof.co.nz

RESIDENTIAL TRIMRIB® WALL CLADDING
VERTICAL BUTT JOINT - VERTICAL CLADDING ON CAVITY WITH CLADDING CHANGE (CAVITY)

Detail Number: RI-RTW009B-1

Date drawn: 07/07/2017

Scale: 1 : 5@ A4

NOTES:

1. CAVITY BATTENS CONTAINING CORROSIVE MATERIAL MUST BE SEPARATED FROM METAL CLADDING BY DPC, BUILDING WRAP, PVC OR PAINTING
2. CASTELLATED BATTEN, DRAINAGE PLASTIC BATTEN OR APPROVED DRAINED BATTEN CAN BE USED WITH THIS SYSTEM

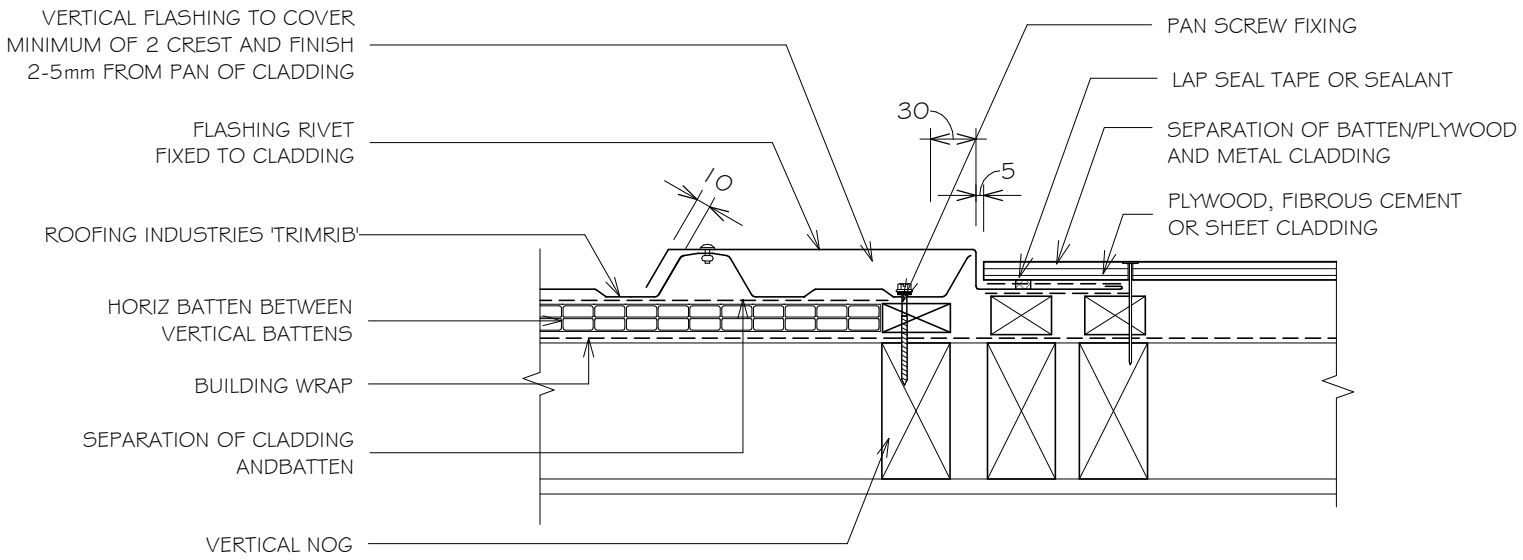

NOTES:

- These details are generally in compliance with E2/AS1 and/or the NZ Metal Roof & Wall Cladding Code of Practice and in some cases specific details by 'Roofing Industries'.
- The building designer is ultimatley responsible to ensure that details used meet the requirements of the NZ Building Code for the specific project.
- Details of the supporting structure including cavity battens are indicative only and are the responsibility of the building designer. For steel framed buildings thermal break cavity battens may be required.
- Underlay selection and building wrap types are the responsibility of the designer. When rigid wall underlay is required it is the designers responsibility to ensure the correct type is used and follow the manufacturers recommendation for installation.
- These details are for Roofing Industries profile/s as nominated and may not be applicable to other profiles.
- This drawing is the copyright of 'Roofing Industries' and can only be copied or reproduced with their permission.
- Further information can be obtained from the NZ Metal Roof & Wall Cladding Code of Practice: www.metalroofing.org.nz OR NZBC clause E2/AS1.

Roofing Industries
roof.co.nz

RESIDENTIAL TRIMRIB® WALL CLADDING
VERTICAL CLADDING ON CAVITY JUNCTION FLASHING

Detail Number: RI-RTW010A-1
Date drawn: 07/07/2017
Scale: 1 : 5@ A4

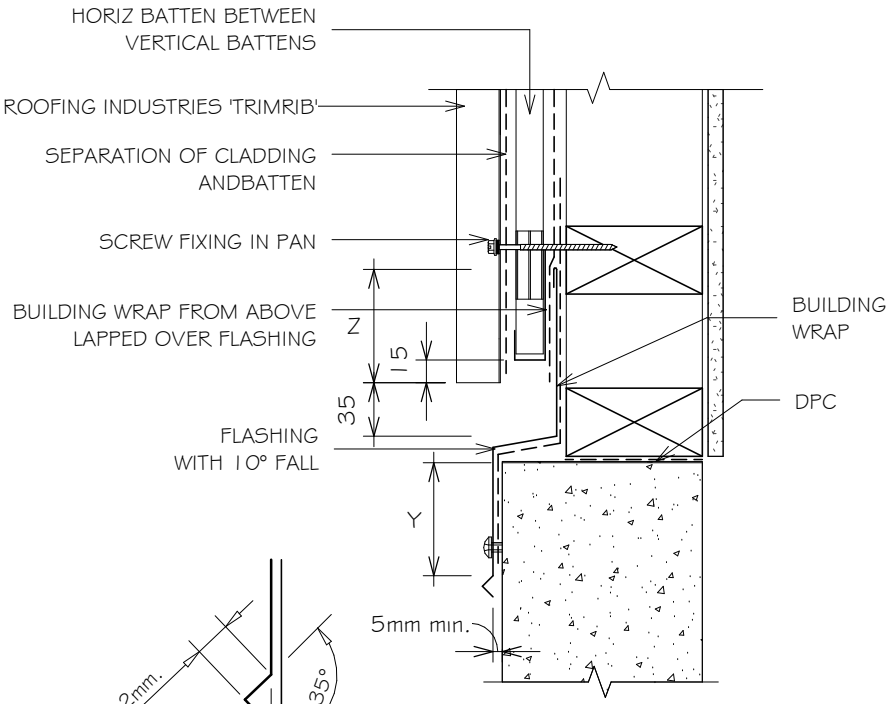

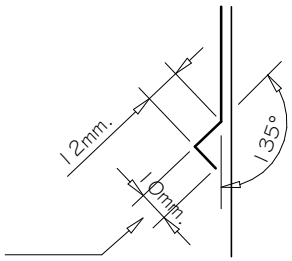

Bird's beak dimensions may vary between manufacturing locations

BIRD'S BEAK at bottom edge of vertical flashing

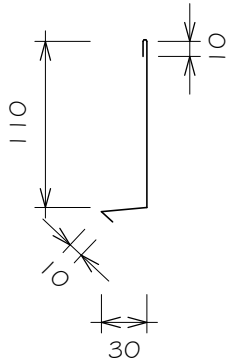

FLASHING OPTION 01

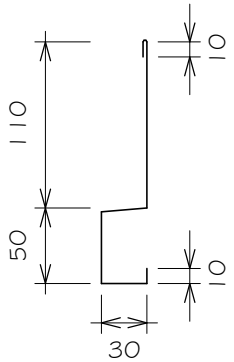

FLASHING OPTION 02

SITE WIND ZONE (As per NZS3604)	MINIMUM	
	Z	Y
SITUATION 1 (1)	75mm	75mm (3)
SITUATION 2 (2)	100mm	100mm (3)

NOTES:

1. SITUATION 1: IN LOW, MEDIUM OR HIGH WIND ZONES.
2. SITUATION 2: FOR VERY HIGH & EXTRA HIGH WIND ZONES.
3. EXCLUDES DRIP EDGE.
4. CAVITY BATTENS CONTAINING CORROSIVE MATERIAL MUST BE SEPARATED FROM METAL CLADDING BY DPC, BUILDING WRAP, PVC OR PAINTING
5. CASTELLATED BATTEN, DRAINAGE PLASTIC BATTEN OR APPROVED DRAINED BATTEN CAN BE USED WITH THIS SYSTEM

NOTES:

- These details are generally in compliance with E2/AS1 and/or the NZ Metal Roof & Wall Cladding Code of Practice and in some cases specific details by 'Roofing Industries'.
- The building designer is ultimatley responsible to ensure that details used meet the requirements of the NZ Building Code for the specific project.
- Details of the supporting structure including cavity battens are indicative only and are the responsibility of the building designer. For steel framed buildings thermal break cavity battens may be required.
- Underlay selection and building wrap types are the responsibility of the designer. When rigid wall underlay is required it is the designers responsibility to ensure the correct type is used and follow the manufacturers recommendation for installation.
- These details are for Roofing Industries profile/s as nominated and may not be applicable to other profiles.
- This drawing is the copyright of 'Roofing Industries' and can only be copied or reproduced with their permission.
- Further information can be obtained from the NZ Metal Roof & Wall Cladding Code of Practice: www.metalroofing.org.nz OR NZBC clause E2/AS1.

Roofing Industries
roof.co.nz

RESIDENTIAL TRIMRIB® WALL CLADDING
BALUSTRADE FOR VERTICAL CLADDING ON CAVITY

Detail Number: RI-RTW011A-1
Date drawn: 07/07/2017
Scale: 1 : 5@ A4

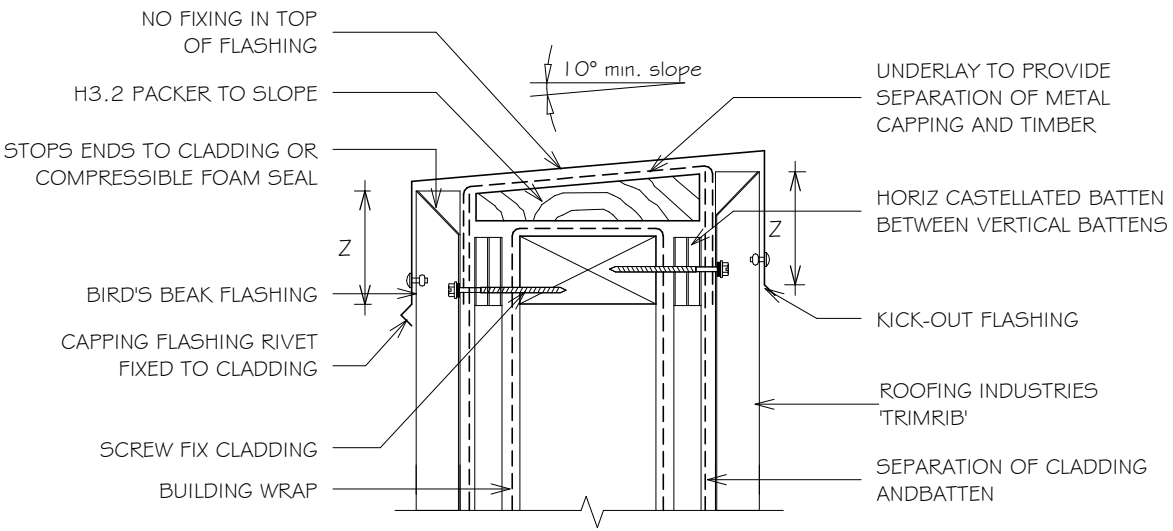

Bird's beak dimensions may vary between manufacturing locations

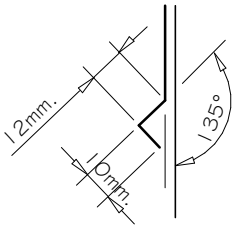

BIRD'S BEAK at bottom edge of vertical flashing

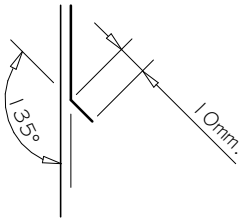

KICK-OUT at bottom edge of vertical flashing

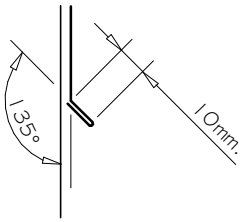

KICK-OUT hem at bottom edge of vertical flashing

SITE WIND ZONE (As per NZS3604)	MINIMUM (mm)
	Z
SITUATION 1 (1)	75 (3)
SITUATION 2 (2)	100 (3)

NOTES:

1. SITUATION 1: IN LOW, MEDIUM OR HIGH WIND ZONES.
2. SITUATION 2: FOR VERY HIGH & EXTRA HIGH WIND ZONES.
3. EXCLUDES DRIP EDGE.
4. CAVITY BATTENS CONTAINING CORROSIVE MATERIAL MUST BE SEPARATED FROM METAL CLADDING BY DPC, BUILDING WRAP, PVC OR PAINTING
5. CASTELLATED BATTEN, DRAINAGE PLASTIC BATTEN OR APPROVED DRAINED BATTEN CAN BE USED WITH THIS SYSTEM
6. SLOPE FOR PARAPET CAP 5 DEGREES. INCREASE SLOPE FOR BALUSTRADE TO 10 DEGREES. REFER F4/AS1.

NOTES:

- These details are generally in compliance with E2/AS1 and/or the NZ Metal Roof & Wall Cladding Code of Practice and in some cases specific details by 'Roofing Industries'.
- The building designer is ultimatley responsible to ensure that details used meet the requirements of the NZ Building Code for the specific project.
- Details of the supporting structure including cavity battens are indicative only and are the responsibility of the building designer. For steel framed buildings thermal break cavity battens may be required.
- Underlay selection and building wrap types are the responsibility of the designer. When rigid wall underlay is required it is the designers responsibility to ensure the correct type is used and follow the manufacturers recommendation for installation.
- These details are for Roofing Industries profile/s as nominated and may not be applicable to other profiles.
- This drawing is the copyright of 'Roofing Industries' and can only be copied or reproduced with their permission.
- Further information can be obtained from the NZ Metal Roof & Wall Cladding Code of Practice: www.metalroofing.org.nz OR NZBC clause E2/AS1.

Roofing Industries
roof.co.nz

RESIDENTIAL TRIMRIB® WALL CLADDING
HEAD FLASHING FOR VERTICAL CLADDING ON CAVITY (RECESSED WINDOW/DOOR)

Detail Number: RI-RTW012A-1

Date drawn: 07/07/2017

Scale: 1 : 5@ A4

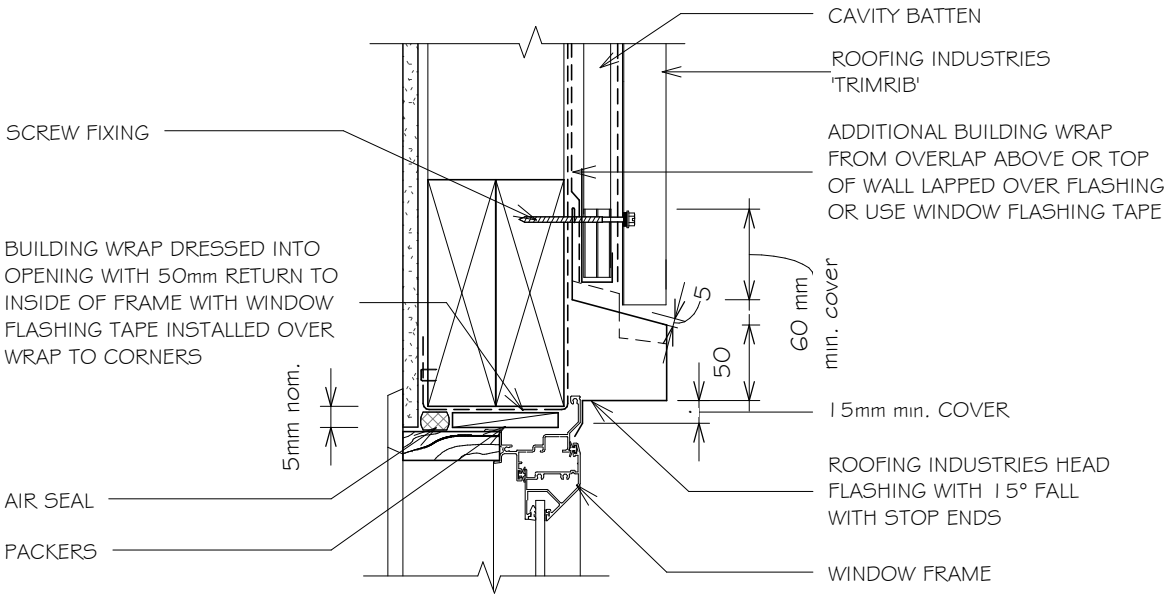

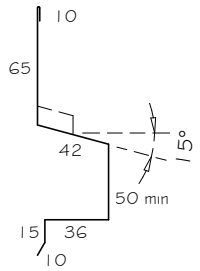

(Dimensions are indicative only)
Turn down end of head flashing to jamb flashing

GENERAL NOTES:

1. REFER TO E2/AS1 FOR GENERAL WINDOW OPENING FOR WRAPPING OF FRAMED OPENING PRIOR TO WINDOW INSTALLATION.
2. A MIN. OF 8mm EFFECTIVE COVER AT SILLS SHALL BE PERMITTED WHERE NECESSARY TO ALLOW FOR TOLERANCES.
3. WINDOW PROFILE TO BE SELECTED TO ACHIEVE COVER SHOWN IN DETAILS.
4. ARCHITRAVE'S ARE SHOWN FOR CONSISTENCY ONLY, DETAIL MAY BE USED WITH REBATED LINER.
5. WHERE SUPPORT BRACKETS ARE REQUIRED BY THE WINDOW MANUFACTURER TO CARRY THE FRAME AND GLAZING LOADS THEY MUST BE SUPPLIED AS AN INTEGRAL PART OF THE WINDOW MANUFACTURER'S RECOMMENDATIONS.
6. LIASE WITH WINDOW MANUFACTURER PRIOR TO INSTALLATION.
7. SEAL HEAD FLASHING TO WINDOW IN VERY HIGH & EXTRA HIGH WIND ZONES.
8. REFER TO E2/AS1 FOR ALTERNATIVE.
9. CAVITY BATTENS CONTAINING CORROSIVE MATERIAL MUST BE SEPARATED FROM METAL CLADDING BY DPC, BUILDING WRAP, PVC OR PAINTING
10. CASTELLATED BATTEN, DRAINAGE PLASTIC BATTEN OR APPROVED DRAINED BATTEN CAN BE USED WITH THIS SYSTEM

NOTES:

- These details are generally in compliance with E2/AS1 and/or the NZ Metal Roof & Wall Cladding Code of Practice and in some cases specific details by 'Roofing Industries'.
- The building designer is ultimatley responsible to ensure that details used meet the requirements of the NZ Building Code for the specific project.
- Details of the supporting structure including cavity battens are indicative only and are the responsibility of the building designer. For steel framed buildings thermal break cavity battens may be required.
- Underlay selection and building wrap types are the responsibility of the designer. When rigid wall underlay is required it is the designers responsibility to ensure the correct type is used and follow the manufacturers recommendation for installation.
- These details are for Roofing Industries profile/s as nominated and may not be applicable to other profiles.
- This drawing is the copyright of 'Roofing Industries' and can only be copied or reproduced with their permission.
- Further information can be obtained from the NZ Metal Roof & Wall Cladding Code of Practice: www.metalroofing.org.nz OR NZBC clause E2/AS1.

REFERENCE FLASHINGS:
NZ METAL ROOF AND WALL CLADDING CODE OF PRACTICE
NZMRM AND E2/AS1.
DIMENSIONS ARE INDICATIVE ONLY

Roofing Industries
roof.co.nz

RESIDENTIAL TRIMRIB® WALL CLADDING
JAMB FLASHING FOR VERTICAL CLADDING ON CAVITY. (RECESSED WINDOW/DOOR)

Detail Number: RI-RTW012B-1

Date drawn: 07/07/2017

Scale: 1 : 5@ A4

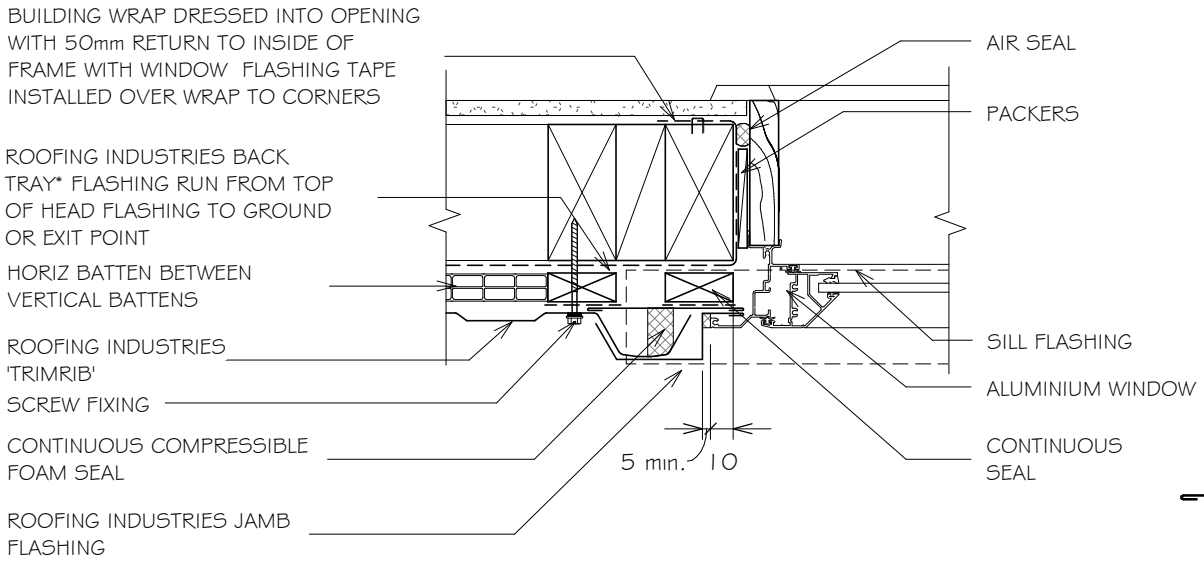

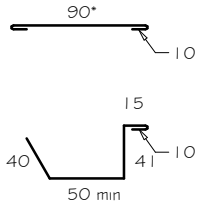

* Back tray size may require to increase to ensure coverage at ends of head flashing. (Dimensions are indicative only)
Turn down end of head flashing

GENERAL NOTES:

1. REFER TO E2/AS1 FOR GENERAL WINDOW OPENING FOR WRAPPING OF FRAMED OPENING PRIOR TO WINDOW INSTALLATION.
2. A MIN. OF 8mm EFFECTIVE COVER AT SILLS SHALL BE PERMITTED WHERE NECESSARY TO ALLOW FOR TOLERANCES.
3. WINDOW PROFILE TO BE SELECTED TO ACHIEVE COVER SHOWN IN DETAILS.
4. ARCHITRAVE'S ARE SHOWN FOR CONSISTENCY ONLY, DETAIL MAY BE USED WITH REBATED LINER.
5. WHERE SUPPORT BRACKETS ARE REQUIRED BY THE WINDOW MANUFACTURER TO CARRY THE FRAME AND GLAZING LOADS THEY MUST BE SUPPLIED AS AN INTEGRAL PART OF THE WINDOW MANUFACTURER'S RECOMMENDATIONS.
6. LIASE WITH WINDOW MANUFACTURER PRIOR TO INSTALLATION.
7. REFER TO E2/AS1 FOR ALTERNATIVE.
8. CAVITY BATTENS CONTAINING CORROSIVE MATERIAL MUST BE SEPARATED FROM METAL CLADDING BY DPC, BUILDING WRAP, PVC OR PAINTING
9. CASTELLATED BATTEN, DRAINAGE PLASTIC BATTEN OR APPROVED DRAINED BATTEN CAN BE USED WITH THIS SYSTEM

REFERENCE FLASHINGS: NZ METAL ROOF AND WALL CLADDING CODE OF PRACTICE NZMRM AND E2/AS1. DIMENSIONS ARE INDICATIVE ONLY

NOTES:

- These details are generally in compliance with E2/AS1 and/or the NZ Metal Roof & Wall Cladding Code of Practice and in some cases specific details by 'Roofing Industries'.
- The building designer is ultimatley responsible to ensure that details used meet the requirements of the NZ Building Code for the specific project.
- Details of the supporting structure including cavity battens are indicative only and are the responsibility of the building designer. For steel framed buildings thermal break cavity battens may be required.
- Underlay selection and building wrap types are the responsibility of the designer. When rigid wall underlay is required it is the designers responsibility to ensure the correct type is used and follow the manufacturers recommendation for installation.
- These details are for Roofing Industries profile/s as nominated and may not be applicable to other profiles.
-
- Further information can be obtained from the NZ Metal Roof & Wall Cladding Code of Practice: www.metalroofing.org.nz OR NZBC clause E2/AS1.

Roofing Industries
roof.co.nz

RESIDENTIAL TRIMRIB® WALL CLADDING
SILL FLASHING FOR VERTICAL CLADDING ON CAVITY.
(RECESSED WINDOW/DOOR)

Detail Number: RI-RTW012C-1

Date drawn: 07/07/2017

Scale: 1 : 5@ A4

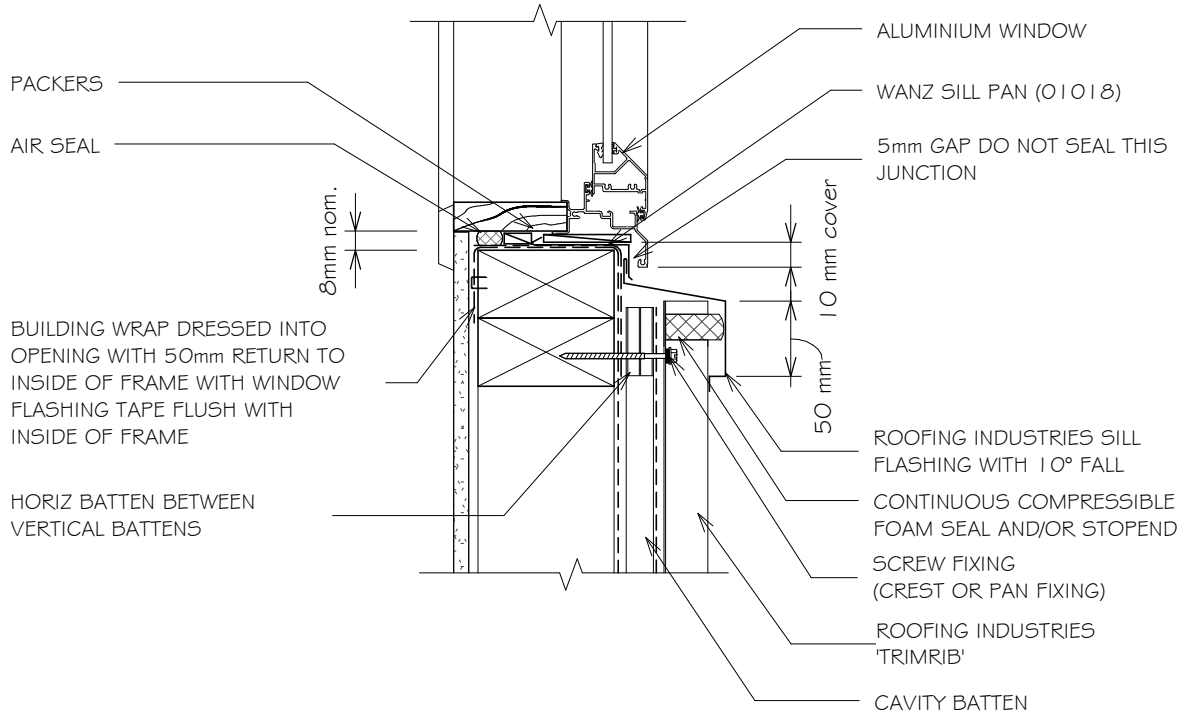

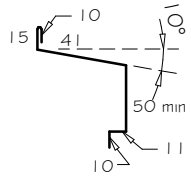

Sill flashings stop ended to receive jamb flashings (Dimensions are indicative only & show minimum lap covers)

GENERAL NOTES:

1. REFER TO E2/AS1 FOR GENERAL WINDOW OPENING FOR WRAPPING OF FRAMED OPENING PRIOR TO WINDOW INSTALLATION.
2. A MIN. OF 8mm EFFECTIVE COVER AT SILLS SHALL BE PERMITTED WHERE NECESSARY TO ALLOW FOR TOLERANCES.
3. WINDOW PROFILE TO BE SELECTED TO ACHIEVE COVER SHOWN IN DETAILS.
4. ARCHITRAVE'S ARE SHOWN FOR CONSISTENCY ONLY, DETAIL MAY BE USED WITH REBATED LINER.
5. WHERE SUPPORT BRACKETS ARE REQUIRED BY THE WINDOW MANUFACTURER TO CARRY THE FRAME AND GLAZING LOADS THEY MUST BE SUPPLIED AS AN INTEGRAL PART OF THE WINDOW MANUFACTURER'S RECOMMENDATIONS.
6. LIASE WITH WINDOW MANUFACTURER PRIOR TO INSTALLATION.
7. REFER TO E2/AS1 FOR ALTERNATIVE.
8. CAVITY BATTENS CONTAINING CORROSIVE MATERIAL MUST BE SEPARATED FROM METAL CLADDING BY DPC, BUILDING WRAP, PVC OR PAINTING
9. CASTELLATED BATTEN, DRAINAGE PLASTIC BATTEN OR APPROVED DRAINED BATTEN CAN BE USED WITH THIS SYSTEM

REFERENCE FLASHINGS:
NZ METAL ROOF AND WALL CLADDING CODE OF PRACTICE NZMRM AND E2/AS1.
DIMENSIONS ARE INDICATIVE ONLY

NOTES:

- These details are generally in compliance with E2/AS1 and/or the NZ Metal Roof & Wall Cladding Code of Practice and in some cases specific details by 'Roofing Industries'.
- The building designer is ultimatley responsible to ensure that details used meet the requirements of the NZ Building Code for the specific project.
- Details of the supporting structure including cavity battens are indicative only and are the responsibility of the building designer. For steel framed buildings thermal break cavity battens may be required.
- Underlay selection and building wrap types are the responsibility of the designer. When rigid wall underlay is required it is the designers responsibility to ensure the correct type is used and follow the manufacturers recommendation for installation.
- These details are for Roofing Industries profile/s as nominated and may not be applicable to other profiles.
- This drawing is the copyright of 'Roofing Industries' and can only be copied or reproduced with their permission.
- Further information can be obtained from the NZ Metal Roof & Wall Cladding Code of Practice: www.metalroofing.org.nz OR NZBC clause E2/AS1.

Roofing Industries
roof.co.nz

RESIDENTIAL TRIMRIB® WALL CLADDING
METER BOX HEAD FLASHING FOR VERTICAL CLADDING ON CAVITY

Detail Number: RI-RTW015A-1

Date drawn: 07/07/2017

Scale: 1 : 5@ A4

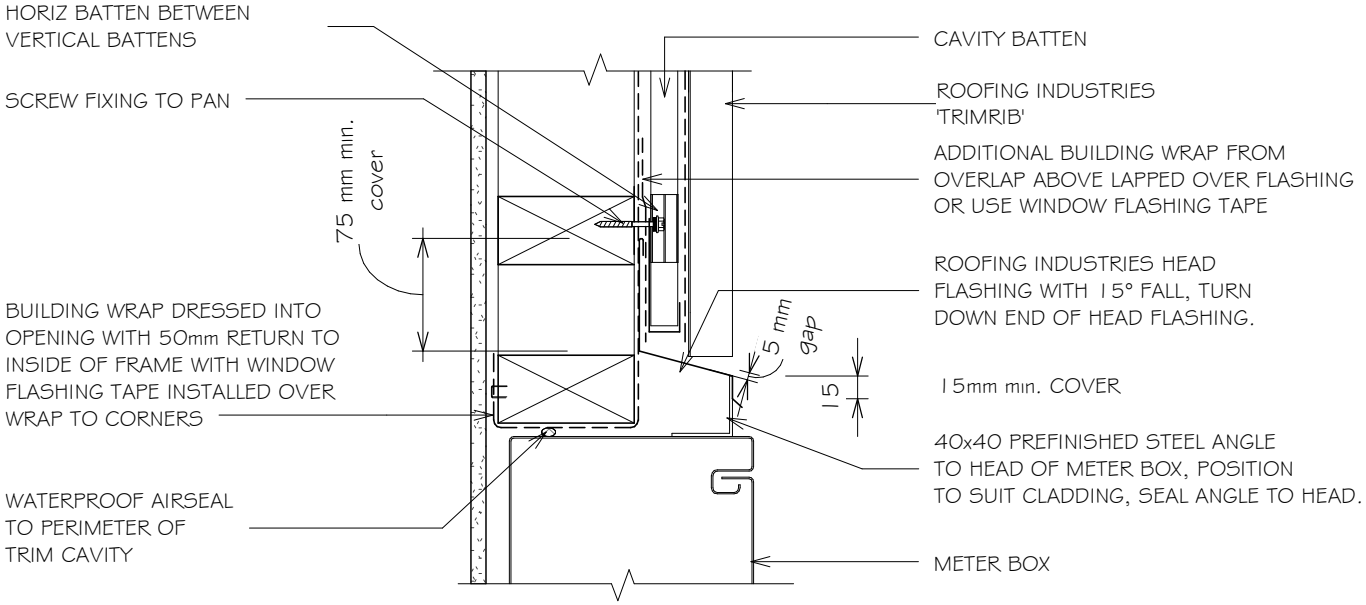

NOTES:

1. REFER TO E2/AS1 FOR GENERAL METERBOX AND SIMILAR PENETRATIONS / OPENINGS.
2. CAVITY BATTENS CONTAINING CORROSIVE MATERIAL MUST BE SEPARATED FROM METAL CLADDING BY DPC, BUILDING WRAP, PVC OR PAINTING
3. CASTELLATED BATTEN, DRAINAGE PLASTIC BATTEN OR APPROVED DRAINED BATTEN CAN BE USED WITH THIS SYSTEM

NOTES:

- These details are generally in compliance with E2/AS1 and/or the NZ Metal Roof & Wall Cladding Code of Practice and in some cases specific details by 'Roofing Industries'.
- The building designer is ultimatley responsible to ensure that details used meet the requirements of the NZ Building Code for the specific project.
- Details of the supporting structure including cavity battens are indicative only and are the responsibility of the building designer. For steel framed buildings thermal break cavity battens may be required.
- Underlay selection and building wrap types are the responsibility of the designer. When rigid wall underlay is required it is the designers responsibility to ensure the correct type is used and follow the manufacturers recommendation for installation.
- These details are for Roofing Industries profile/s as nominated and may not be applicable to other profiles.
- This drawing is the copyright of 'Roofing Industries' and can only be copied or reproduced with their permission.
- Further information can be obtained from the NZ Metal Roof & Wall Cladding Code of Practice: www.metalroofing.org.nz OR NZBC clause E2/AS1.

Roofing Industries
roof.co.nz

RESIDENTIAL TRIMRIB® WALL CLADDING
METER BOX SIDE FLASHING FOR VERTICAL CLADDING ON CAVITY

Detail Number: RI-RTW016A-1

Date drawn: 07/07/2017

Scale: 1 : 5@ A4

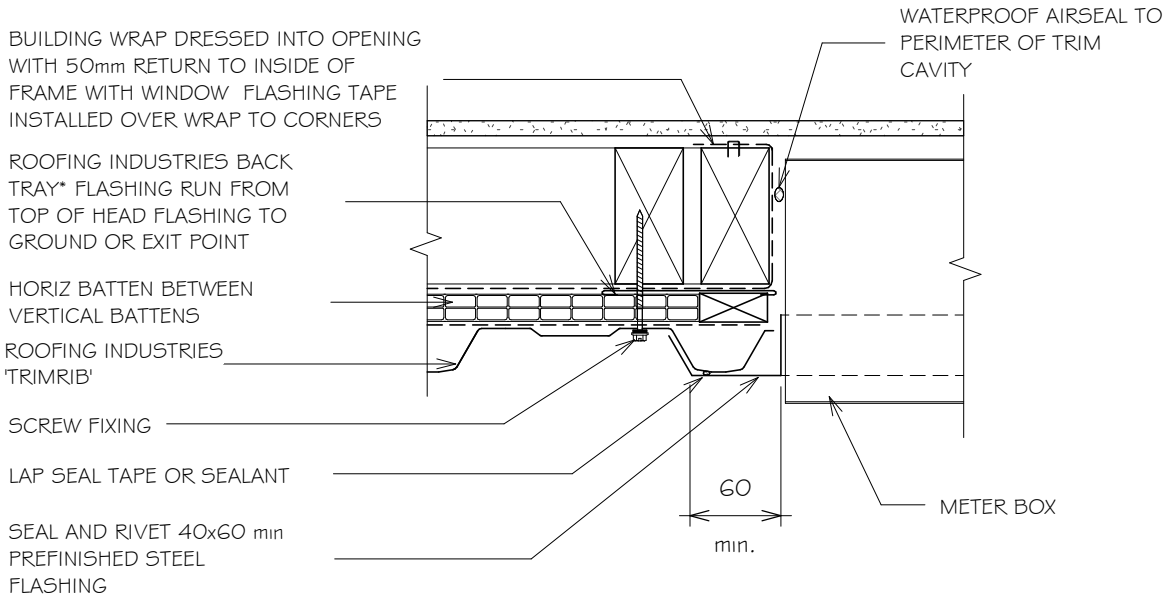

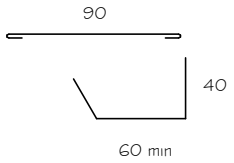

* Back tray size may require to increase to ensure coverage at ends of head flashing. (Dimensions are indicative only) Turn down end of head flashing

NOTES:

1. REFER TO E2/AS1 FOR GENERAL METERBOX AND SIMILAR PENETRATIONS / OPENINGS.
2. CAVITY BATTENS CONTAINING CORROSIVE MATERIAL MUST BE SEPARATED FROM METAL CLADDING BY DPC, BUILDING WRAP, PVC OR PAINTING
3. CASTELLATED BATTEN, DRAINAGE PLASTIC BATTEN OR APPROVED DRAINED BATTEN CAN BE USED WITH THIS SYSTEM

NOTES:

- These details are generally in compliance with E2/AS1 and/or the NZ Metal Roof & Wall Cladding Code of Practice and in some cases specific details by 'Roofing Industries'.
- The building designer is ultimatley responsible to ensure that details used meet the requirements of the NZ Building Code for the specific project.
- Details of the supporting structure including cavity battens are indicative only and are the responsibility of the building designer. For steel framed buildings thermal break cavity battens may be required.
- Underlay selection and building wrap types are the responsibility of the designer. When rigid wall underlay is required it is the designers responsibility to ensure the correct type is used and follow the manufacturers recommendation for installation.
- These details are for Roofing Industries profile/s as nominated and may not be applicable to other profiles.
- This drawing is the copyright of 'Roofing Industries' and can only be copied or reproduced with their permission.
- Further information can be obtained from the NZ Metal Roof & Wall Cladding Code of Practice: www.metalroofing.org.nz OR NZBC clause E2/AS1.

Roofing Industries
roof.co.nz

RESIDENTIAL TRIMRIB® WALL CLADDING
METER BOX BASE FLASHING FOR VERTICAL CLADDING ON CAVITY

Detail Number: RI-RTW017A-1
Date drawn: 07/07/2017
Scale: 1 : 5@ A4

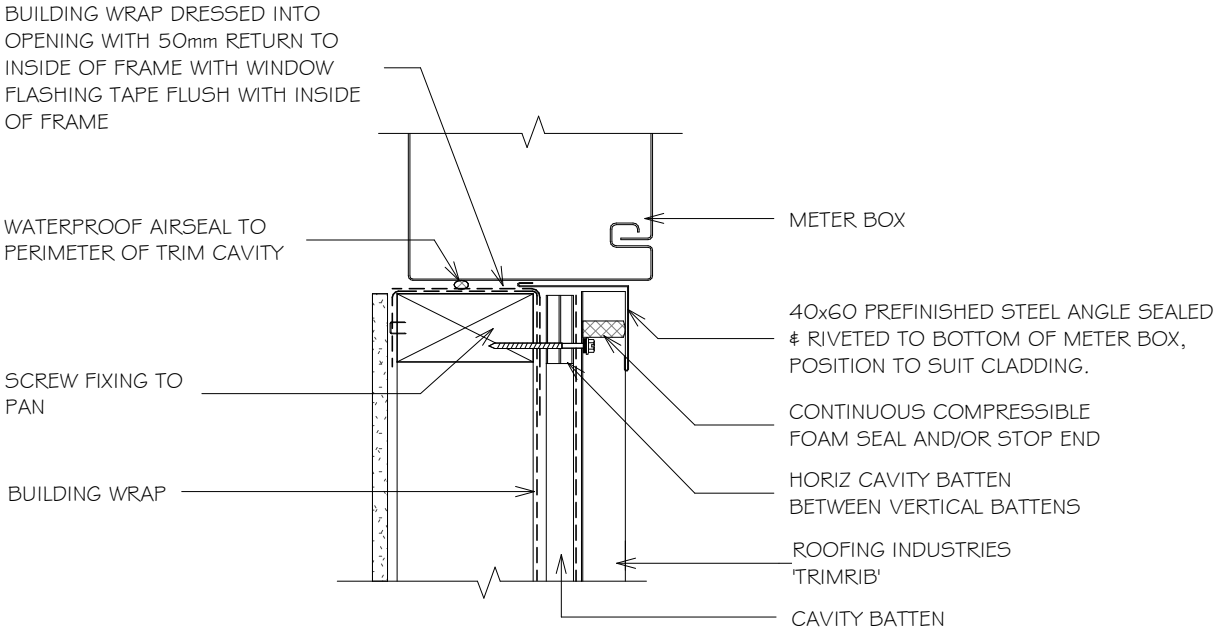

NOTES:

1. REFER TO E2/AS1 FOR GENERAL METERBOX AND SIMILAR PENETRATIONS / OPENINGS.
2. CAVITY BATTENS CONTAINING CORROSIVE MATERIAL MUST BE SEPARATED FROM METAL CLADDING BY DPC, BUILDING WRAP, PVC OR PAINTING
3. CASTELLATED BATTEN, DRAINAGE PLASTIC BATTEN OR APPROVED DRAINED BATTEN CAN BE USED WITH THIS SYSTEM

NOTES:

- These details are generally in compliance with E2/AS1 and/or the NZ Metal Roof & Wall Cladding Code of Practice and in some cases specific details by 'Roofing Industries'.
- The building designer is ultimatley responsible to ensure that details used meet the requirements of the NZ Building Code for the specific project.
- Details of the supporting structure including cavity battens are indicative only and are the responsibility of the building designer. For steel framed buildings thermal break cavity battens may be required.
- Underlay selection and building wrap types are the responsibility of the designer. When rigid wall underlay is required it is the designers responsibility to ensure the correct type is used and follow the manufacturers recommendation for installation.
- These details are for Roofing Industries profile/s as nominated and may not be applicable to other profiles.
- This drawing is the copyright of 'Roofing Industries' and can only be copied or reproduced with their permission.
- Further information can be obtained from the NZ Metal Roof & Wall Cladding Code of Practice: www.metalroofing.org.nz OR NZBC clause E2/AS1.

Roofing Industries
roof.co.nz

RESIDENTIAL TRIMRIB® WALL CLADDING
BARGE DETAIL FOR HORIZONTAL CLADDING (KICK OUT)

Detail Number: RI-RTW021A
Date drawn: 07/07/2017
Scale: 1 : 5@ A4

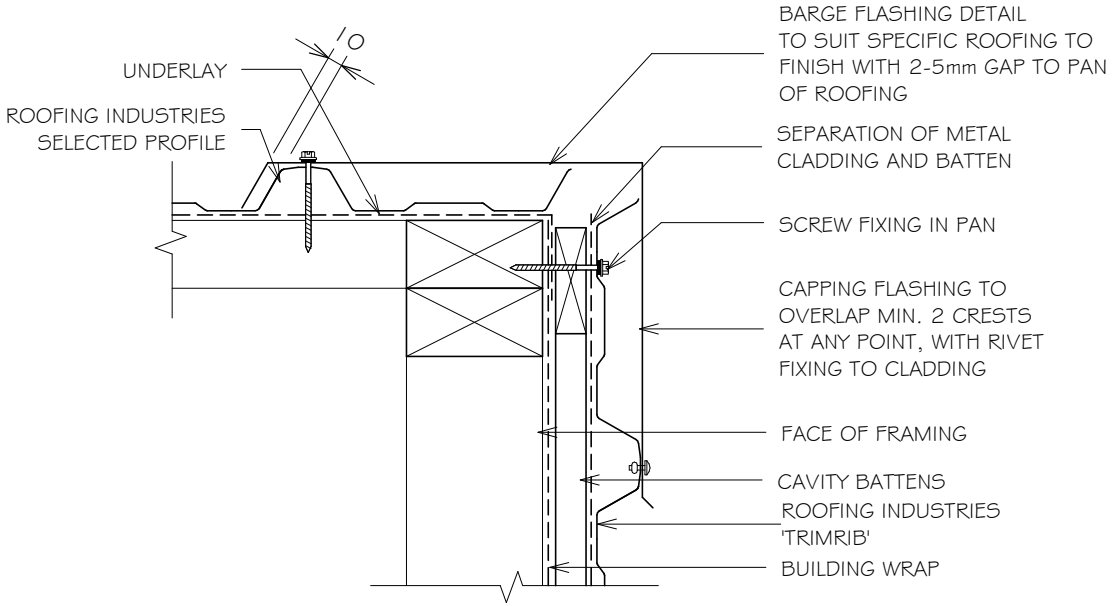

NOTES:

1. MINIMUM 12 GAUGE WITH 30mm PENETRATION INTO FRAMING TIMBER TEKSCREW WITH NEO. (USE STEELTEK FOR STEEL FRAMING)
2. CAVITY BATTENS CONTAINING CORROSIVE MATERIAL MUST BE SEPARATED FROM METAL CLADDING BY DPC, BUILDING WRAP, PVC OR PAINTING.
3. REFER TO E2/AS1 FOR COVER OF FLASHING AND/OR MRM CODE OF PRACTICE.

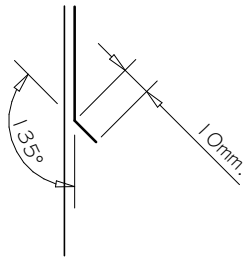

KICK-OUT at bottom edge of vertical flashing

NOTES:

- These details are generally in compliance with E2/AS1 and/or the NZ Metal Roof & Wall Cladding Code of Practice and in some cases specific details by 'Roofing Industries'.
- The building designer is ultimatley responsible to ensure that details used meet the requirements of the NZ Building Code for the specific project.
- Details of the supporting structure including cavity battens are indicative only and are the responsibility of the building designer. For steel framed buildings thermal break cavity battens may be required.
- Underlay selection and building wrap types are the responsibility of the designer. When rigid wall underlay is required it is the designers responsibility to ensure the correct type is used and follow the manufacturers recommendation for installation.
- These details are for Roofing Industries profile/s as nominated and may not be applicable to other profiles.
- This drawing is the copyright of 'Roofing Industries' and can only be copied or reproduced with their permission.
- Further information can be obtained from the NZ Metal Roof & Wall Cladding Code of Practice: www.metalroofing.org.nz OR NZBC clause E2/AS1.

Roofing Industries
roof.co.nz

RESIDENTIAL TRIMRIB® WALL CLADDING
BARGE DETAIL FOR HORIZONTAL CLADDING (BIRDS BEAK)

Detail Number: RI-RTW021B
Date drawn: 07/07/2017
Scale: 1 : 5@ A4

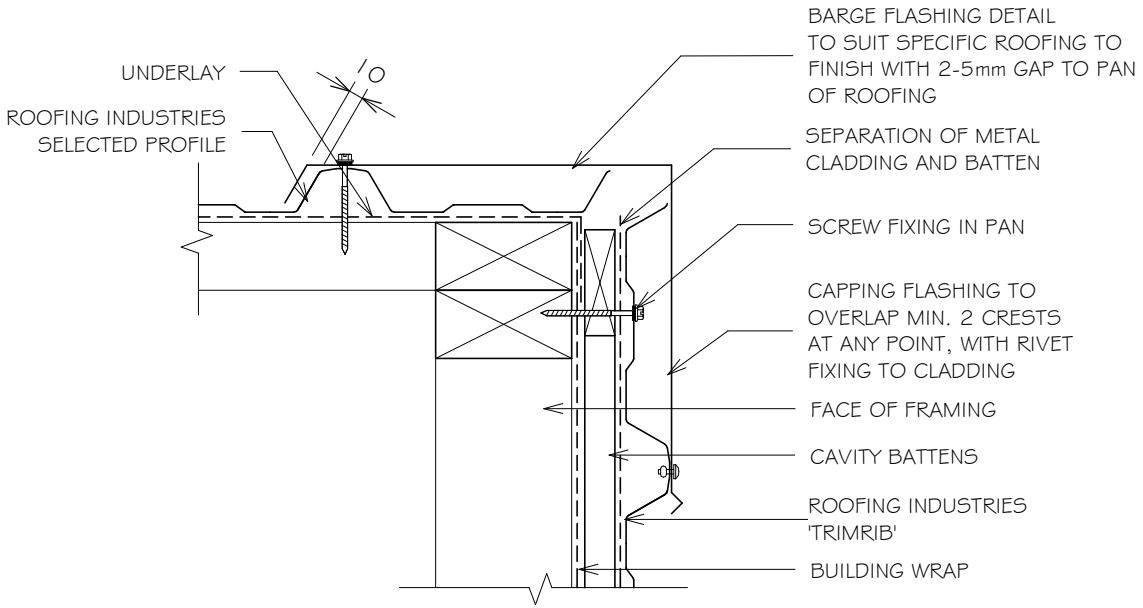

NOTES:

1. MINIMUM 12 GAUGE WITH 30mm PENETRATION INTO FRAMING TIMBER TEKSCREW WITH NEO. (USE STEELTEK FOR STEEL FRAMING)
2. CAVITY BATTENS CONTAINING CORROSIVE MATERIAL MUST BE SEPARATED FROM METAL CLADDING BY DPC, BUILDING WRAP, PVC OR PAINTING.
3. REFER TO E2/AS1 FOR COVER OF FLASHING AND/OR MRM CODE OF PRACTICE.

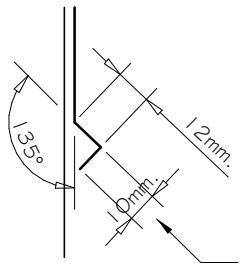

Bird's beak dimension may vary between manufacturing locations.

BIRD'S BEAK at bottom edge of vertical flashing

NOTES:

- These details are generally in compliance with E2/AS1 and/or the NZ Metal Roof & Wall Cladding Code of Practice and in some cases specific details by 'Roofing Industries'.
- The building designer is ultimatley responsible to ensure that details used meet the requirements of the NZ Building Code for the specific project.
- Details of the supporting structure including cavity battens are indicative only and are the responsibility of the building designer. For steel framed buildings thermal break cavity battens may be required.
- Underlay selection and building wrap types are the responsibility of the designer. When rigid wall underlay is required it is the designers responsibility to ensure the correct type is used and follow the manufacturers recommendation for installation.
- These details are for Roofing Industries profile/s as nominated and may not be applicable to other profiles.
- This drawing is the copyright of 'Roofing Industries' and can only be copied or reproduced with their permission.
- Further information can be obtained from the NZ Metal Roof & Wall Cladding Code of Practice: www.metalroofing.org.nz OR NZBC clause E2/AS1.

Roofing Industries
roof.co.nz

RESIDENTIAL TRIMRIB® WALL CLADDING
EXTERNAL CORNER FLASHING FOR HORIZONTAL CLADDING

Detail Number: RI-RTW023A
Date drawn: 07/07/2017
Scale: 1 : 5@ A4

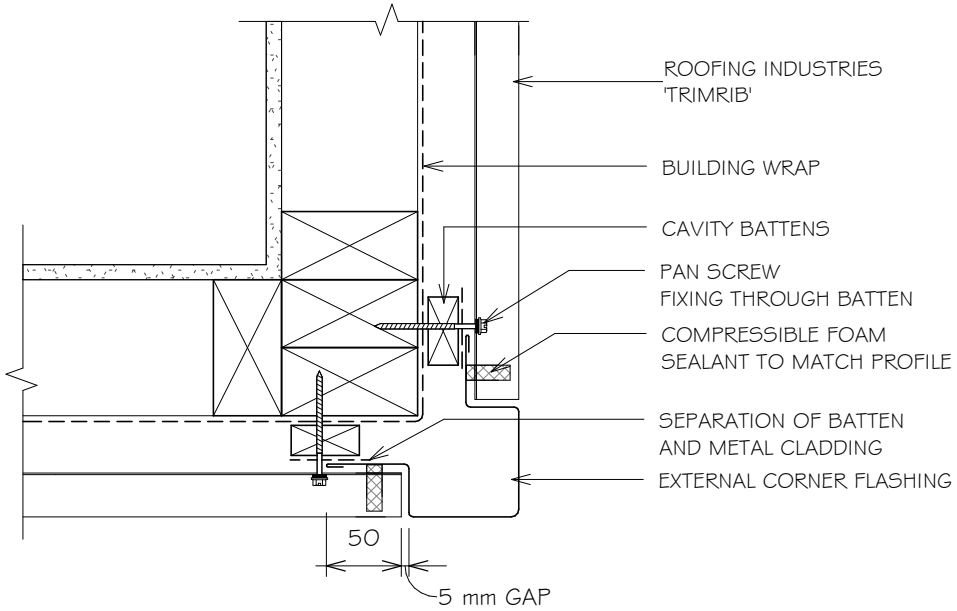

NOTES:

1. MINIMUM 12 GAUGE WITH 30mm PENETRATION INTO FRAMING TIMBER TEKSCREW WITH NEO. (USE STEELTEK FOR STEEL FRAMING)
2. CAVITY BATTENS CONTAINING CORROSIVE MATERIAL MUST BE SEPARATED FROM METAL CLADDING BY DPC, BUILDING WRAP, PVC OR PAINTING.

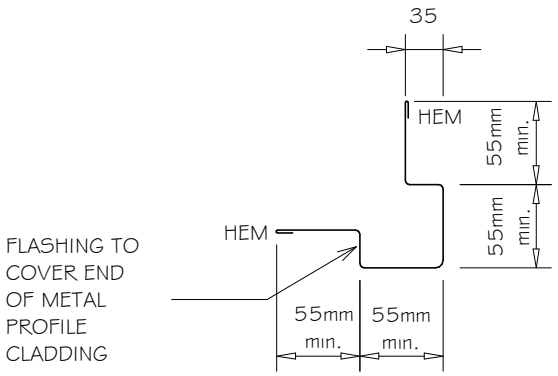

NOTES:

- These details are generally in compliance with E2/AS1 and/or the NZ Metal Roof & Wall Cladding Code of Practice and in some cases specific details by 'Roofing Industries'.
- The building designer is ultimatley responsible to ensure that details used meet the requirements of the NZ Building Code for the specific project.
- Details of the supporting structure including cavity battens are indicative only and are the responsibility of the building designer. For steel framed buildings thermal break cavity battens may be required.
- Underlay selection and building wrap types are the responsibility of the designer. When rigid wall underlay is required it is the designers responsibility to ensure the correct type is used and follow the manufacturers recommendation for installation.
- These details are for Roofing Industries profile/s as nominated and may not be applicable to other profiles.
- This drawing is the copyright of 'Roofing Industries' and can only be copied or reproduced with their permission.
- Further information can be obtained from the NZ Metal Roof & Wall Cladding Code of Practice: www.metalroofing.org.nz OR NZBC clause E2/AS1.

Roofing Industries
roof.co.nz

RESIDENTIAL TRIMRIB® WALL CLADDING
ALTERNATIVE EXTERNAL CORNER FLASHING FOR HORIZONTAL CLADDING

Detail Number: RI-RTW023B
Date drawn: 07/07/2017
Scale: 1 : 5@ A4

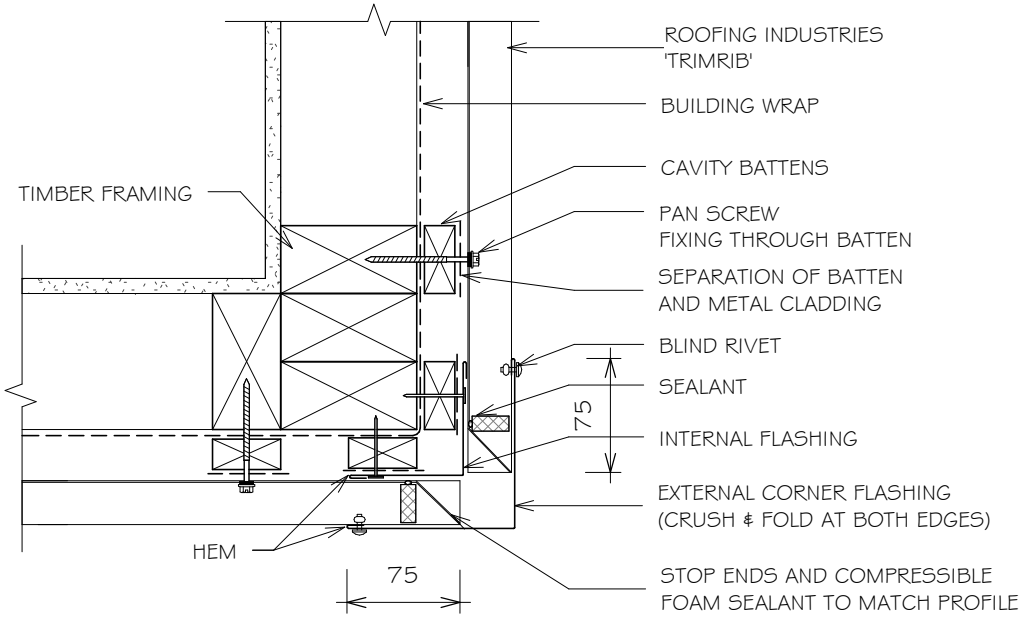

NOTES:

1. MINIMUM 12 GAUGE WITH 30mm PENETRATION INTO FRAMING TIMBER TEKSCREW WITH NEO. (USE STEELTEK FOR STEEL FRAMING)
2. CAVITY BATTENS CONTAINING CORROSIVE MATERIAL MUST BE SEPARATED FROM METAL CLADDING BY DPC, BUILDING WRAP, PVC OR PAINTING.

NOTES:

- These details are generally in compliance with E2/AS1 and/or the NZ Metal Roof & Wall Cladding Code of Practice and in some cases specific details by 'Roofing Industries'.
- The building designer is ultimatley responsible to ensure that details used meet the requirements of the NZ Building Code for the specific project.
- Details of the supporting structure including cavity battens are indicative only and are the responsibility of the building designer. For steel framed buildings thermal break cavity battens may be required.
- Underlay selection and building wrap types are the responsibility of the designer. When rigid wall underlay is required it is the designers responsibility to ensure the correct type is used and follow the manufacturers recommendation for installation.
- These details are for Roofing Industries profile/s as nominated and may not be applicable to other profiles.
- This drawing is the copyright of 'Roofing Industries' and can only be copied or reproduced with their permission.
- Further information can be obtained from the NZ Metal Roof & Wall Cladding Code of Practice: www.metalroofing.org.nz OR NZBC clause E2/AS1.

Roofing Industries
roof.co.nz

RESIDENTIAL TRIMRIB® WALL CLADDING
INTERNAL CORNER FLASHING FOR HORIZONTAL CLADDING

Detail Number: RI-RTW024A
Date drawn: 07/07/2017
Scale: 1 : 5@ A4

NOTES:

1. MINIMUM 12 GAUGE WITH 30mm PENETRATION INTO FRAMING TIMBER TEKSCREW WITH NEO. (USE STEELTEK FOR STEEL FRAMING)
2. CAVITY BATTENS CONTAINING CORROSIVE MATERIAL MUST BE SEPARATED FROM METAL CLADDING BY DPC, BUILDING WRAP, PVC OR PAINTING.

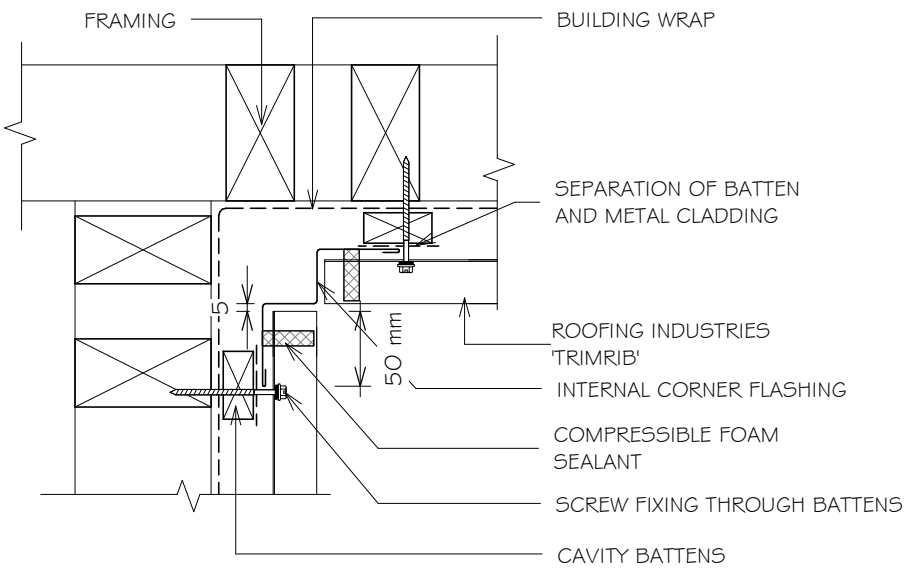

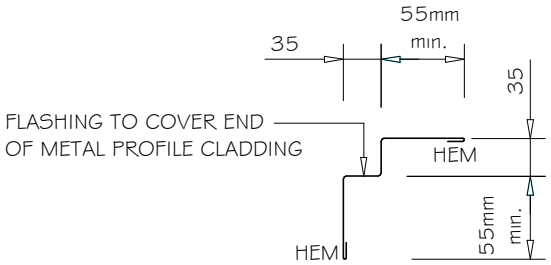

NOTES:

- These details are generally in compliance with E2/AS1 and/or the NZ Metal Roof & Wall Cladding Code of Practice and in some cases specific details by 'Roofing Industries'.
- The building designer is ultimatley responsible to ensure that details used meet the requirements of the NZ Building Code for the specific project.
- Details of the supporting structure including cavity battens are indicative only and are the responsibility of the building designer. For steel framed buildings thermal break cavity battens may be required.
- Underlay selection and building wrap types are the responsibility of the designer. When rigid wall underlay is required it is the designers responsibility to ensure the correct type is used and follow the manufacturers recommendation for installation.
- These details are for Roofing Industries profile/s as nominated and may not be applicable to other profiles.
- This drawing is the copyright of 'Roofing Industries' and can only be copied or reproduced with their permission.
- Further information can be obtained from the NZ Metal Roof & Wall Cladding Code of Practice: www.metalroofing.org.nz OR NZBC clause E2/AS1.

Roofing Industries
roof.co.nz

RESIDENTIAL TRIMRIB® WALL CLADDING
ALTERNATIVE INTERNAL CORNER FLASHING FOR HORIZONTAL CLADDING

Detail Number: RI-RTW024B
Date drawn: 07/07/2017
Scale: 1 : 5@ A4

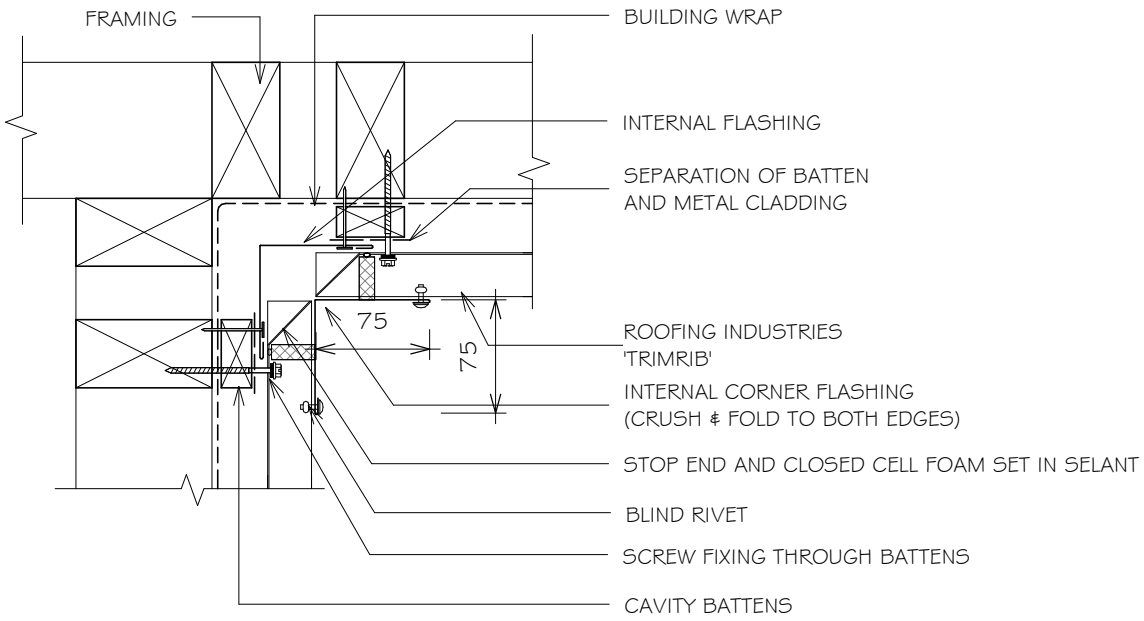

NOTES:

1. MINIMUM 12 GAUGE WITH 30mm PENETRATION INTO FRAMING TIMBER TEKSCREW WITH NEO. (USE STEELTEK FOR STEEL FRAMING)

2. CAVITY BATTENS CONTAINING CORROSIVE MATERIAL MUST BE SEPARATED FROM METAL CLADDING BY DPC, BUILDING WRAP, PVC OR PAINTING.

NOTES:

- These details are generally in compliance with E2/AS1 and/or the NZ Metal Roof & Wall Cladding Code of Practice and in some cases specific details by 'Roofing Industries'.
- The building designer is ultimatley responsible to ensure that details used meet the requirements of the NZ Building Code for the specific project.
- Details of the supporting structure including cavity battens are indicative only and are the responsibility of the building designer. For steel framed buildings thermal break cavity battens may be required.
- Underlay selection and building wrap types are the responsibility of the designer. When rigid wall underlay is required it is the designers responsibility to ensure the correct type is used and follow the manufacturers recommendation for installation.
- These details are for Roofing Industries profile/s as nominated and may not be applicable to other profiles.
- This drawing is the copyright of 'Roofing Industries' and can only be copied or reproduced with their permission.
- Further information can be obtained from the NZ Metal Roof & Wall Cladding Code of Practice: www.metalroofing.org.nz OR NZBC clause E2/AS1.

Roofing Industries
roof.co.nz

RESIDENTIAL TRIMRIB® WALL CLADDING
BOTTOM OF CLADDING FOR HORIZONTAL TRIMRIB

Detail Number: RI-RTW025A
Date drawn: 07/07/2017
Scale: 1 : 5@ A4

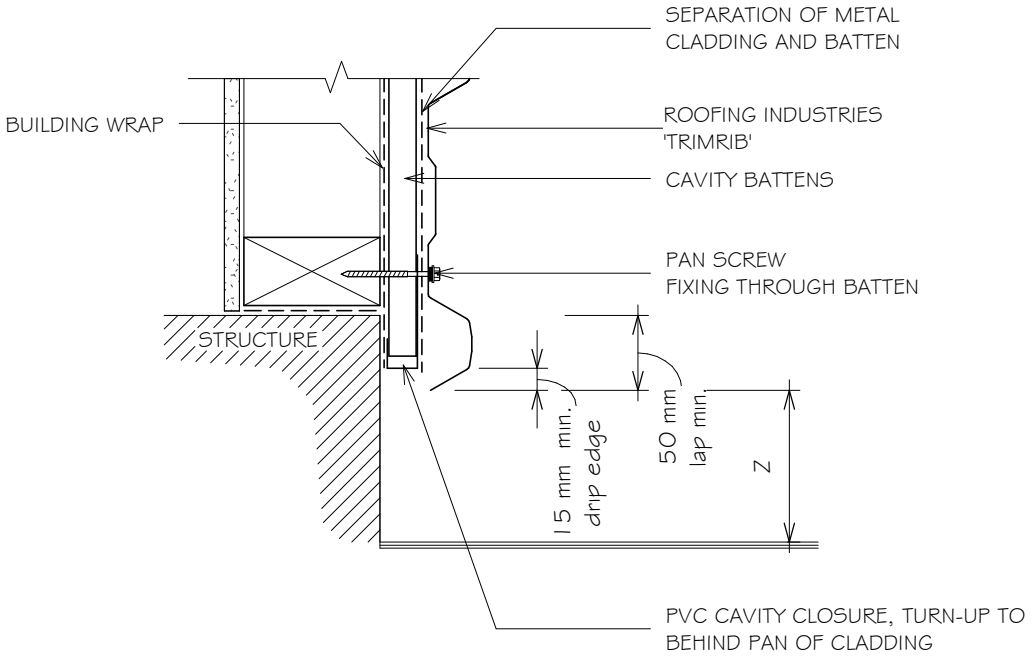

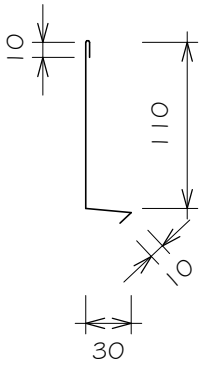

FLASHING OPTION 01

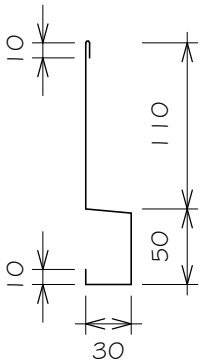

FLASHING OPTION 02

SET DOWN	MINIMUM
	Z
PAVED SURFACE	100mm
UNPAVED SURFACE	175mm

NOTES:

1. MINIMUM 12 GAUGE WITH 30mm PENETRATION INTO FRAMING TIMBER TEKSCREW WITH NEO. (USE STEELTEK FOR STEEL FRAMING)
2. CAVITY BATTENS CONTAINING CORROSIVE MATERIAL MUST BE SEPARATED FROM METAL CLADDING BY DPC, BUILDING WRAP, PVC OR PAINTING.

NOTES:

- These details are generally in compliance with E2/AS1 and/or the NZ Metal Roof & Wall Cladding Code of Practice and in some cases specific details by 'Roofing Industries'.
- The building designer is ultimatley responsible to ensure that details used meet the requirements of the NZ Building Code for the specific project.
- Details of the supporting structure including cavity battens are indicative only and are the responsibility of the building designer. For steel framed buildings thermal break cavity battens may be required.
- Underlay selection and building wrap types are the responsibility of the designer. When rigid wall underlay is required it is the designers responsibility to ensure the correct type is used and follow the manufacturers recommendation for installation.
- These details are for Roofing Industries profile/s as nominated and may not be applicable to other profiles.
- This drawing is the copyright of 'Roofing Industries' and can only be copied or reproduced with their permission.
- Further information can be obtained from the NZ Metal Roof & Wall Cladding Code of Practice: www.metalroofing.org.nz OR NZBC clause E2/AS1.

Roofing Industries
roof.co.nz

RESIDENTIAL TRIMRIB® WALL CLADDING
SOFFIT FLASHING FOR HORIZONTAL TRIMRIB

Detail Number: RI-RTW026A
Date drawn: 07/07/2017
Scale: 1 : 5@ A4

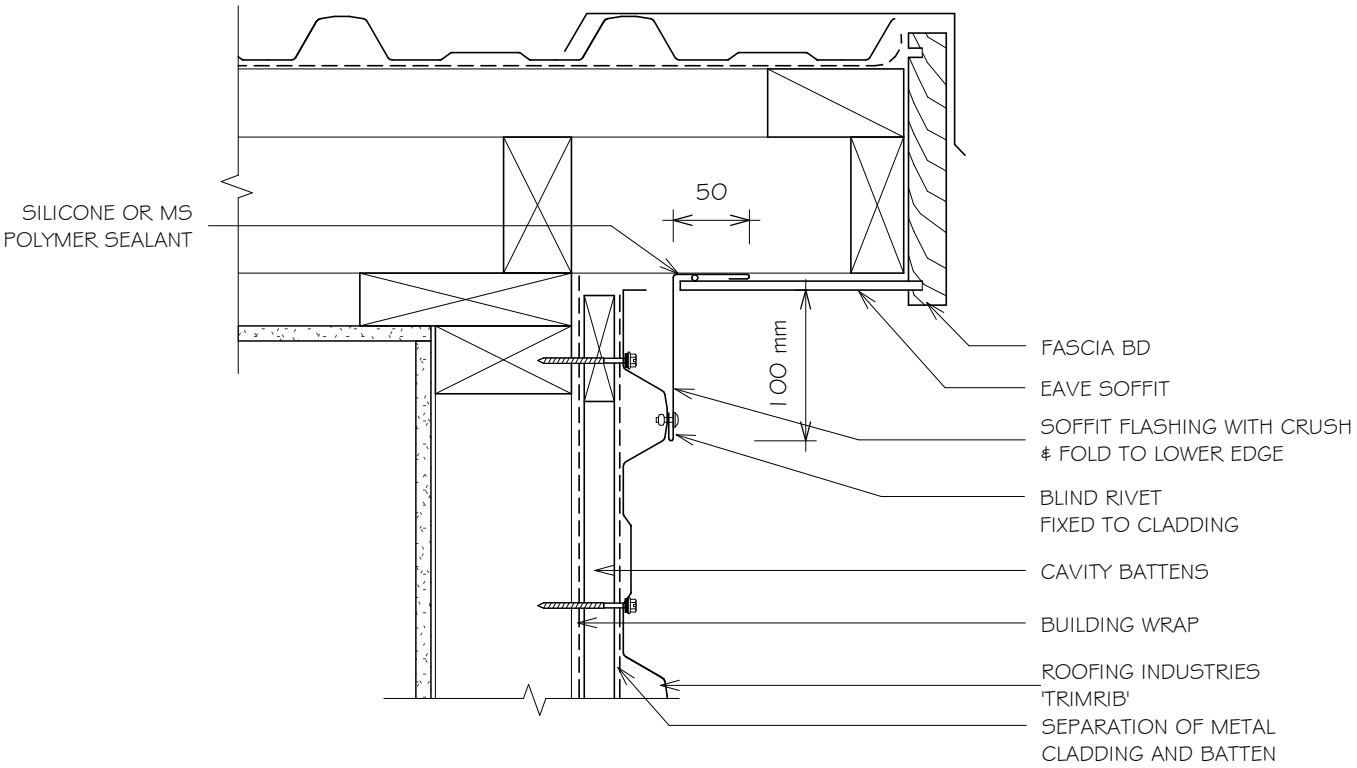

NOTES:

1. MINIMUM 12 GAUGE WITH 30mm PENETRATION INTO FRAMING TIMBER TEKSCREW WITH NEO. (USE STEELTEK FOR STEEL FRAMING)
2. CAVITY BATTENS CONTAINING CORROSIVE MATERIAL MUST BE SEPARATED FROM METAL CLADDING BY DPC, BUILDING WRAP, PVC OR PAINTING.

FLASHING OPTION 1

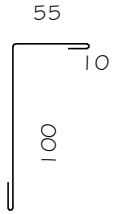

FLASHING OPTION 2

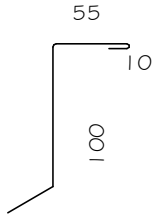

NOTCH GAP
2-5mm TO PAN

NOTES:

- These details are generally in compliance with E2/AS1 and/or the NZ Metal Roof & Wall Cladding Code of Practice and in some cases specific details by 'Roofing Industries'.
- The building designer is ultimatley responsible to ensure that details used meet the requirements of the NZ Building Code for the specific project.
- Details of the supporting structure including cavity battens are indicative only and are the responsibility of the building designer. For steel framed buildings thermal break cavity battens may be required.
- Underlay selection and building wrap types are the responsibility of the designer. When rigid wall underlay is required it is the designers responsibility to ensure the correct type is used and follow the manufacturers recommendation for installation.
- These details are for Roofing Industries profile/s as nominated and may not be applicable to other profiles.
- This drawing is the copyright of 'Roofing Industries' and can only be copied or reproduced with their permission.
- Further information can be obtained from the NZ Metal Roof & Wall Cladding Code of Practice: www.metalroofing.org.nz OR NZBC clause E2/AS1.

Roofing Industries
roof.co.nz

RESIDENTIAL TRIMRIB® WALL CLADDING
SLOPING SOFFIT FLASHING FOR HORIZONTAL TRIMRIB

Detail Number: RI-RTW027A
Date drawn: 07/07/2017
Scale: 1 : 5@ A4

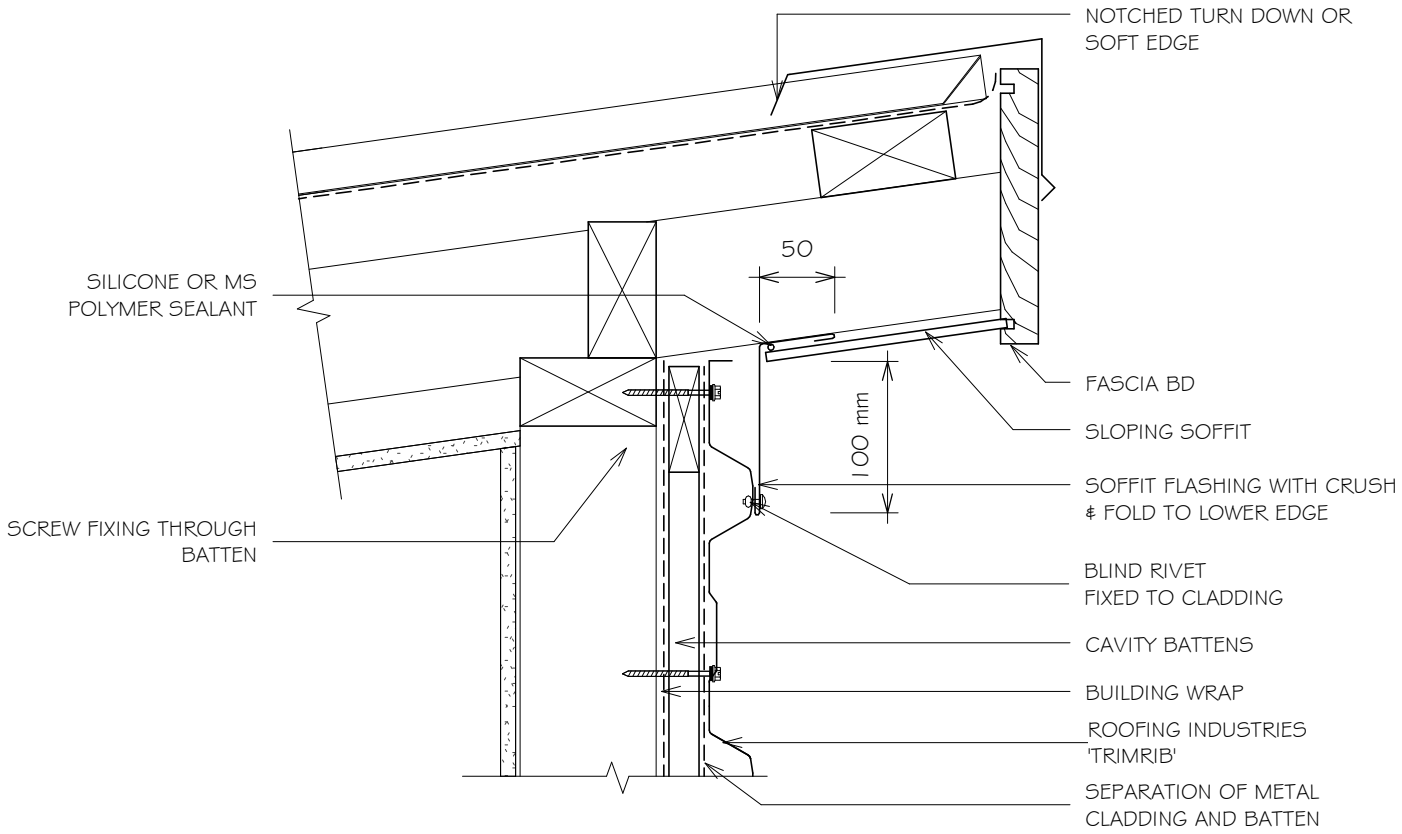

NOTES:

1. MINIMUM 12 GAUGE WITH 30mm PENETRATION INTO FRAMING TIMBER TEKSCREW WITH NEO. (USE STEELTEK FOR STEEL FRAMING)
2. CAVITY BATTENS CONTAINING CORROSIVE MATERIAL MUST BE SEPARATED FROM METAL CLADDING BY DPC, BUILDING WRAP, PVC OR PAINTING.

FLASHING OPTION 1

FLASHING OPTION 2

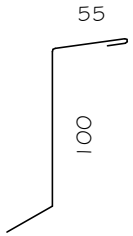

NOTCH GAP
2-5mm TO PAN

NOTES:

- These details are generally in compliance with E2/AS1 and/or the NZ Metal Roof & Wall Cladding Code of Practice and in some cases specific details by 'Roofing Industries'.
- The building designer is ultimatley responsible to ensure that details used meet the requirements of the NZ Building Code for the specific project.
- Details of the supporting structure including cavity battens are indicative only and are the responsibility of the building designer. For steel framed buildings thermal break cavity battens may be required.
- Underlay selection and building wrap types are the responsibility of the designer. When rigid wall underlay is required it is the designers responsibility to ensure the correct type is used and follow the manufacturers recommendation for installation.
- These details are for Roofing Industries profile/s as nominated and may not be applicable to other profiles.
- This drawing is the copyright of 'Roofing Industries' and can only be copied or reproduced with their permission.
- Further information can be obtained from the NZ Metal Roof & Wall Cladding Code of Practice: www.metalroofing.org.nz OR NZBC clause E2/AS1.

Roofing Industries
roof.co.nz

RESIDENTIAL TRIMRIB® WALL CLADDING
VERTICAL BUTT JOINT FOR HORIZONTAL CLADDING

Detail Number: RI-RTW028A
Date drawn: 07/07/2017
Scale: 1 : 5@ A4

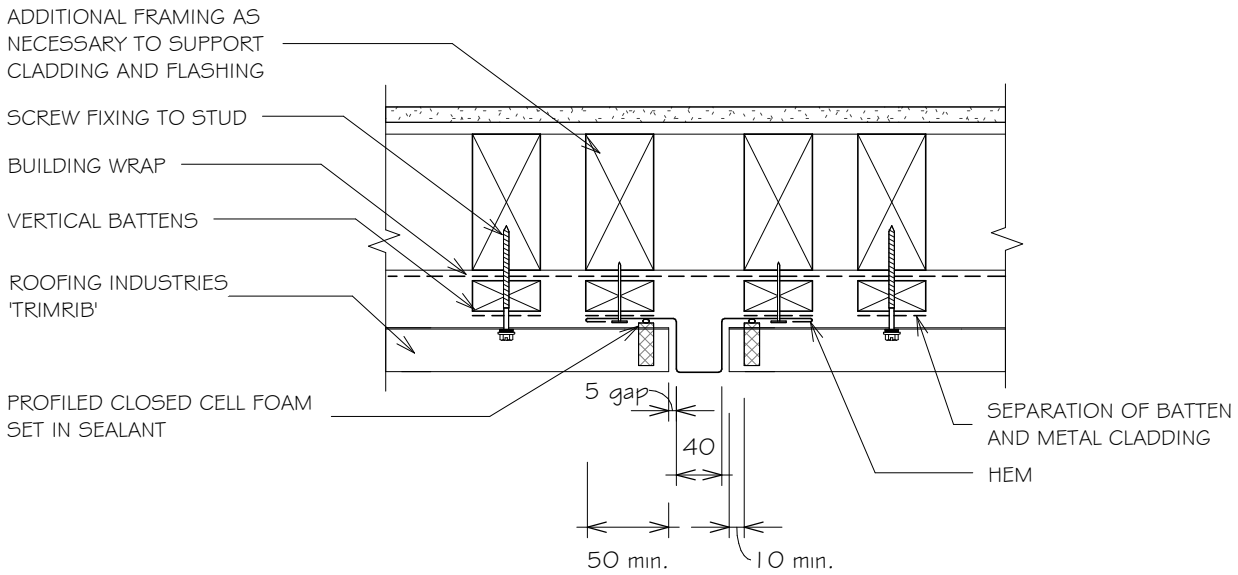

NOTES:

1. MINIMUM 12 GAUGE WITH 30mm PENETRATION INTO FRAMING TIMBER TEKSCREW WITH NEO. (USE STEELTEK FOR STEEL FRAMING)
2. CAVITY BATTENS CONTAINING CORROSIVE MATERIAL MUST BE SEPARATED FROM METAL CLADDING BY DPC, BUILDING WRAP, PVC OR PAINTING.

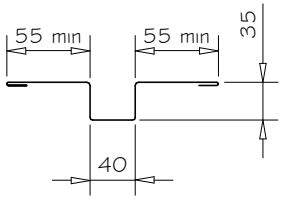

NOTES:

- These details are generally in compliance with E2/AS1 and/or the NZ Metal Roof & Wall Cladding Code of Practice and in some cases specific details by 'Roofing Industries'.
- The building designer is ultimatley responsible to ensure that details used meet the requirements of the NZ Building Code for the specific project.
- Details of the supporting structure including cavity battens are indicative only and are the responsibility of the building designer. For steel framed buildings thermal break cavity battens may be required.
- Underlay selection and building wrap types are the responsibility of the designer. When rigid wall underlay is required it is the designers responsibility to ensure the correct type is used and follow the manufacturers recommendation for installation.
- These details are for Roofing Industries profile/s as nominated and may not be applicable to other profiles.
- This drawing is the copyright of 'Roofing Industries' and can only be copied or reproduced with their permission.
- Further information can be obtained from the NZ Metal Roof & Wall Cladding Code of Practice: www.metalroofing.org.nz OR NZBC clause E2/AS1.

Roofing Industries
roof.co.nz

RESIDENTIAL TRIMRIB® WALL CLADDING
VERTICAL BUTT JOINT FOR HORIZONTAL CLADDING, OPT 2

Detail Number: RI-RTW028B
Date drawn: 07/07/2017
Scale: 1 : 5@ A4

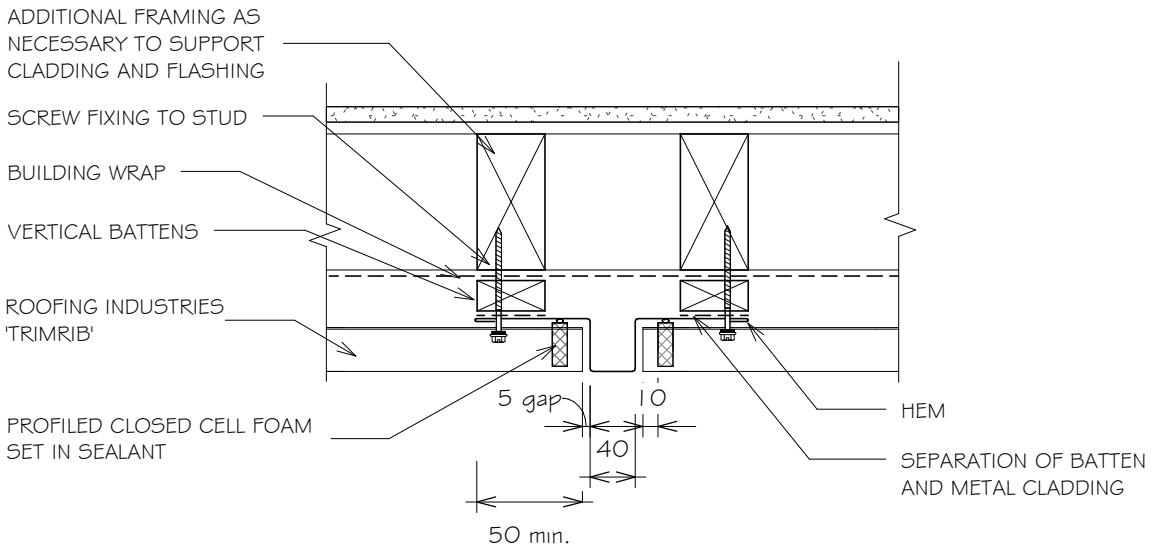

NOTES:

1. MINIMUM 12 GAUGE WITH 30mm PENETRATION INTO FRAMING TIMBER TEKSCREW WITH NEO. (USE STEELTEK FOR STEEL FRAMING)

2. CAVITY BATTENS CONTAINING CORROSIVE MATERIAL MUST BE SEPARATED FROM METAL CLADDING BY DPC, BUILDING WRAP, PVC OR PAINTING.

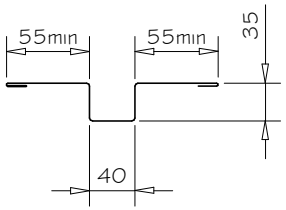

NOTES:

- These details are generally in compliance with E2/AS1 and/or the NZ Metal Roof & Wall Cladding Code of Practice and in some cases specific details by 'Roofing Industries'.
- The building designer is ultimatley responsible to ensure that details used meet the requirements of the NZ Building Code for the specific project.
- Details of the supporting structure including cavity battens are indicative only and are the responsibility of the building designer. For steel framed buildings thermal break cavity battens may be required.
- Underlay selection and building wrap types are the responsibility of the designer. When rigid wall underlay is required it is the designers responsibility to ensure the correct type is used and follow the manufacturers recommendation for installation.
- These details are for Roofing Industries profile/s as nominated and may not be applicable to other profiles.
- This drawing is the copyright of 'Roofing Industries' and can only be copied or reproduced with their permission.
- Further information can be obtained from the NZ Metal Roof & Wall Cladding Code of Practice: www.metalroofing.org.nz OR NZBC clause E2/AS1.

Roofing Industries
roof.co.nz

RESIDENTIAL TRIMRIB® WALL CLADDING
VERTICAL BUTT JOINT FOR HORIZONTAL CLADDING TO ALTERNATIVE CLADDING (UP TO 25MM)

Detail Number: RI-RTW029A
Date drawn: 07/07/2017
Scale: 1 : 5@ A4

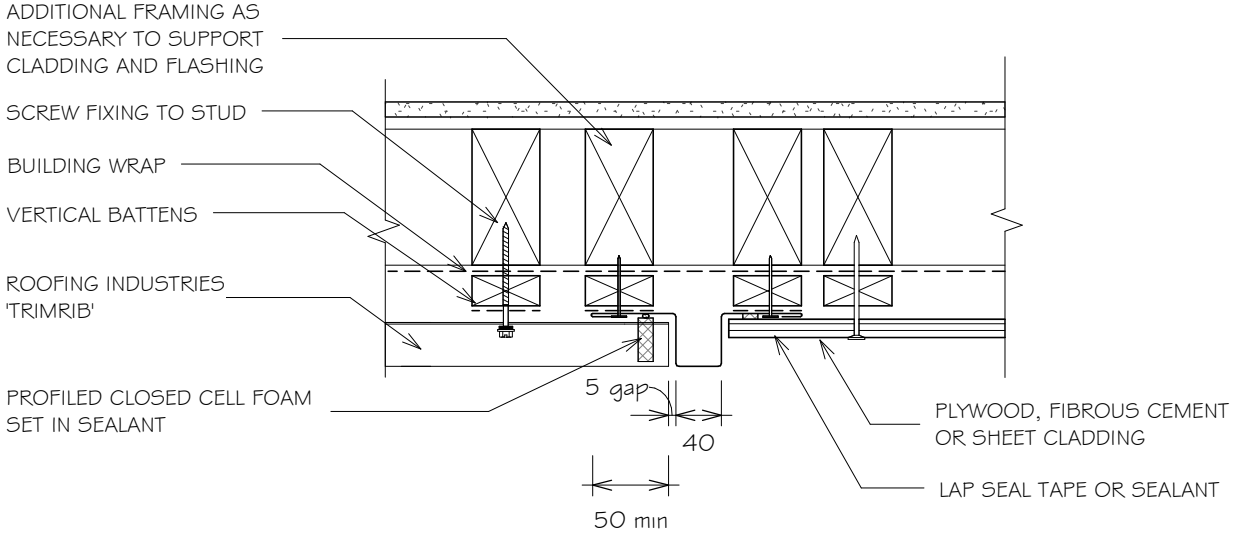

NOTES:

1. MINIMUM 12 GAUGE WITH 30mm PENETRATION INTO FRAMING TIMBER TEKSCREW WITH NEO. (USE STEELTEK FOR STEEL FRAMING)
2. CAVITY BATTENS CONTAINING CORROSIVE MATERIAL MUST BE SEPARATED FROM METAL CLADDING BY DPC, BUILDING WRAP, PVC OR PAINTING.

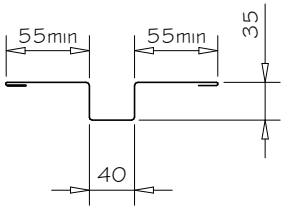

NOTES:

- These details are generally in compliance with E2/AS1 and/or the NZ Metal Roof & Wall Cladding Code of Practice and in some cases specific details by 'Roofing Industries'.
- The building designer is ultimatley responsible to ensure that details used meet the requirements of the NZ Building Code for the specific project.
- Details of the supporting structure including cavity battens are indicative only and are the responsibility of the building designer. For steel framed buildings thermal break cavity battens may be required.
- Underlay selection and building wrap types are the responsibility of the designer. When rigid wall underlay is required it is the designers responsibility to ensure the correct type is used and follow the manufacturers recommendation for installation.
- These details are for Roofing Industries profile/s as nominated and may not be applicable to other profiles.
- This drawing is the copyright of 'Roofing Industries' and can only be copied or reproduced with their permission.
- Further information can be obtained from the NZ Metal Roof & Wall Cladding Code of Practice: www.metalroofing.org.nz OR NZBC clause E2/AS1.

Roofing Industries
roof.co.nz

RESIDENTIAL TRIMRIB® WALL CLADDING
HORIZONTAL CLADDING JUNCTION FLASHING

Detail Number: RI-RTW030A
Date drawn: 07/07/2017
Scale: 1 : 5@ A4

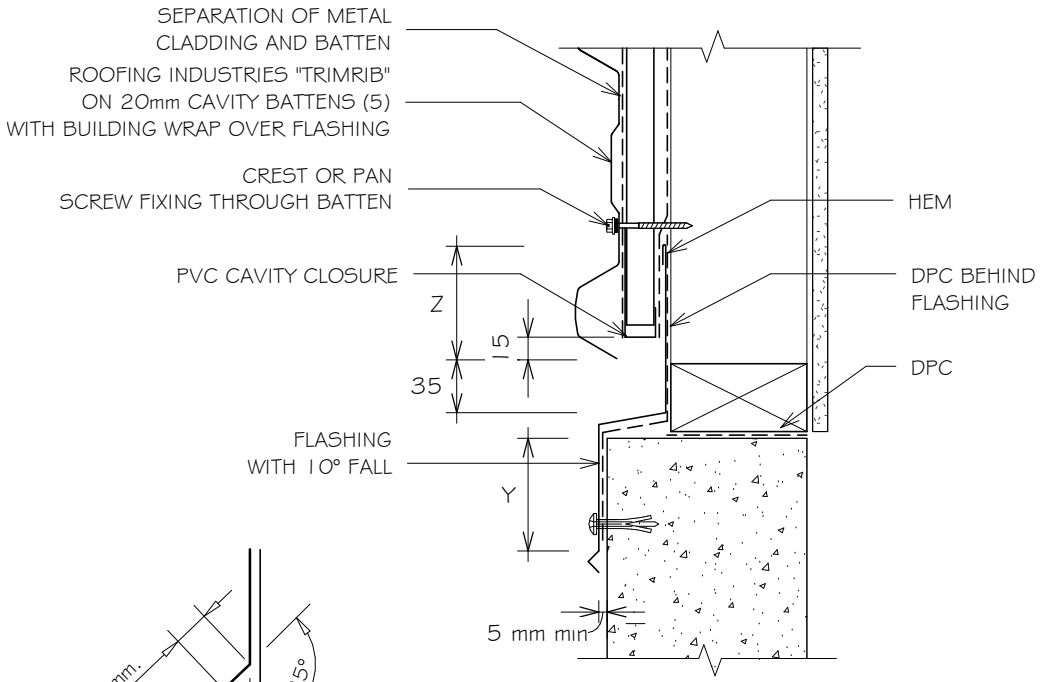

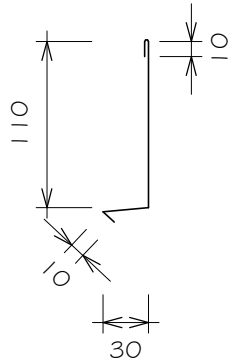

OPTION 01

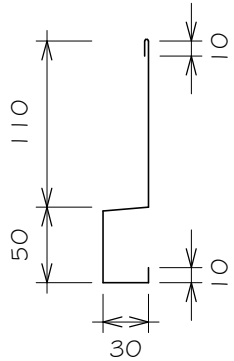

OPTION 02

SITE WIND ZONE (As per NZS3604)	MINIMUM	
	Z	Y
SITUATION 1 (1)	75mm	75mm (3)
SITUATION 2 (2)	100mm	100mm (3)

NOTES:

1. SITUATION 1: IN LOW, MEDIUM OR HIGH WIND ZONES.
2. SITUATION 2: FOR ALL ROOF PITCHES IN VERY HIGH & EXTRA HIGH WIND ZONES.
3. EXCLUDES DRIP EDGE.
4. MINIMUM 12 GAUGE WITH 30mm PENETRATION INTO FRAMING TIMBER TEKSCREW WITH NEO. (USE STEELTEK FOR STEEL FRAMING)
5. CAVITY BATTENS CONTAINING CORROSIVE MATERIAL MUST BE SEPARATED FROM METAL CLADDING BY DPC, BUILDING WRAP, PVC OR PAINTING.

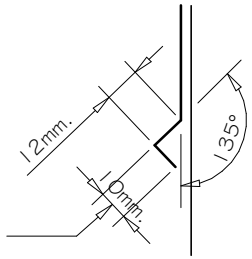

Bird's beak dimensions may vary between manufacturing locations

BIRD'S BEAK at bottom edge of vertical flashing

NOTES:

- These details are generally in compliance with E2/AS1 and/or the NZ Metal Roof & Wall Cladding Code of Practice and in some cases specific details by 'Roofing Industries'.
- The building designer is ultimatley responsible to ensure that details used meet the requirements of the NZ Building Code for the specific project.
- Details of the supporting structure including cavity battens are indicative only and are the responsibility of the building designer. For steel framed buildings thermal break cavity battens may be required.
- Underlay selection and building wrap types are the responsibility of the designer. When rigid wall underlay is required it is the designers responsibility to ensure the correct type is used and follow the manufacturers recommendation for installation.
- These details are for Roofing Industries profile/s as nominated and may not be applicable to other profiles.
- This drawing is the copyright of 'Roofing Industries' and can only be copied or reproduced with their permission.
- Further information can be obtained from the NZ Metal Roof & Wall Cladding Code of Practice: www.metalroofing.org.nz OR NZBC clause E2/AS1.

Roofing Industries
roof.co.nz

RESIDENTIAL TRIMRIB® WALL CLADDING
BALUSTRADE FOR HORIZONTAL CLADDING

Detail Number: RI-RTW031A
Date drawn: 07/07/2017
Scale: 1 : 5@ A4

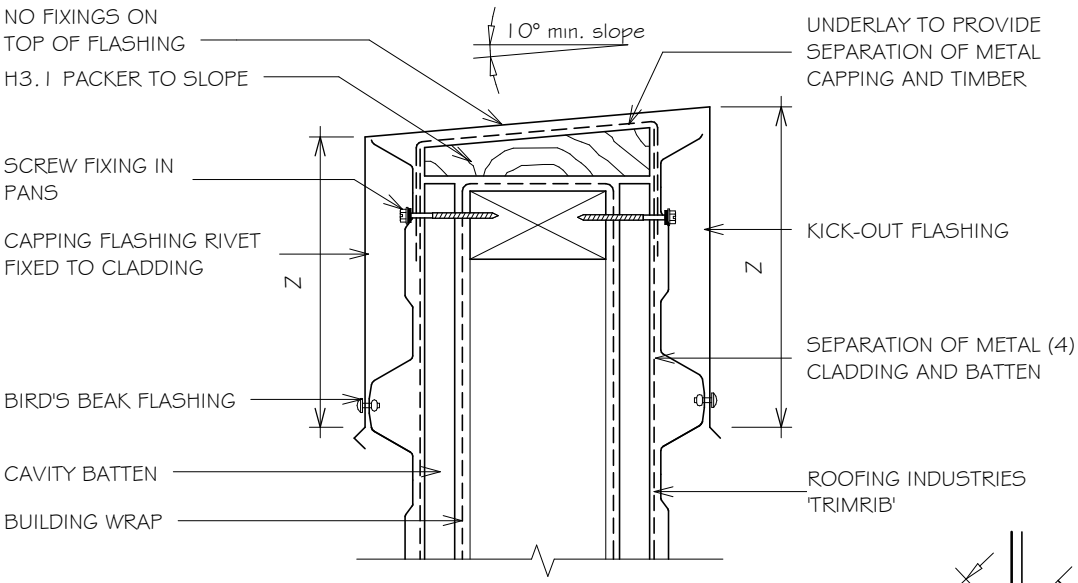

SITE WIND ZONE (As per NZS3604)	MINIMUM (mm)
	Z (5)
SITUATION 1 (1)	75 or 2 crests (3)
SITUATION 2 (2)	100 or 2 crests (3)

NOTES:

1. SITUATION 1: IN LOW, MEDIUM OR HIGH WIND ZONES.
2. SITUATION 2: FOR ALL ROOF PITCHES IN VERY HIGH & EXTRA HIGH WIND ZONES.
3. EXCLUDES DRIP EDGE.
4. CAVITY BATTENS CONTAINING CORROSIVE MATERIAL MUST BE SEPARATED FROM METAL CLADDING BY DPC, BUILDING WRAP, PVC OR PAINTING.
5. SLOPE FOR PARAPET CAP 5 DEGREES. INCREASE SLOPE FOR BALUSTRADE TO 10 DEGREES. REFER F4/AS1.

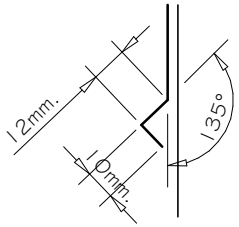

Bird's beak dimensions may vary between manufacturing locations

BIRD'S BEAK at bottom edge of vertical flashing

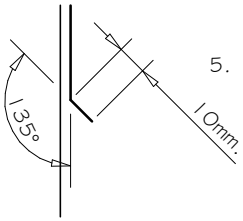

KICK-OUT at bottom edge of vertical flashing

NOTES:

- These details are generally in compliance with E2/AS1 and/or the NZ Metal Roof & Wall Cladding Code of Practice and in some cases specific details by 'Roofing Industries'.
- The building designer is ultimatley responsible to ensure that details used meet the requirements of the NZ Building Code for the specific project.
- Details of the supporting structure including cavity battens are indicative only and are the responsibility of the building designer. For steel framed buildings thermal break cavity battens may be required.
- Underlay selection and building wrap types are the responsibility of the designer. When rigid wall underlay is required it is the designers responsibility to ensure the correct type is used and follow the manufacturers recommendation for installation.
- These details are for Roofing Industries profile/s as nominated and may not be applicable to other profiles.
- This drawing is the copyright of 'Roofing Industries' and can only be copied or reproduced with their permission.
- Further information can be obtained from the NZ Metal Roof & Wall Cladding Code of Practice: www.metalroofing.org.nz OR NZBC clause E2/AS1.

Roofing Industries
roof.co.nz

RESIDENTIAL TRIMRIB® WALL CLADDING
HEAD FLASHING FOR HORIZONTAL CLADDING
(RECESSED WINDOW/DOOR)

Detail Number: RI-RTW032A
Date drawn: 07/07/2017
Scale: 1 : 5@ A4

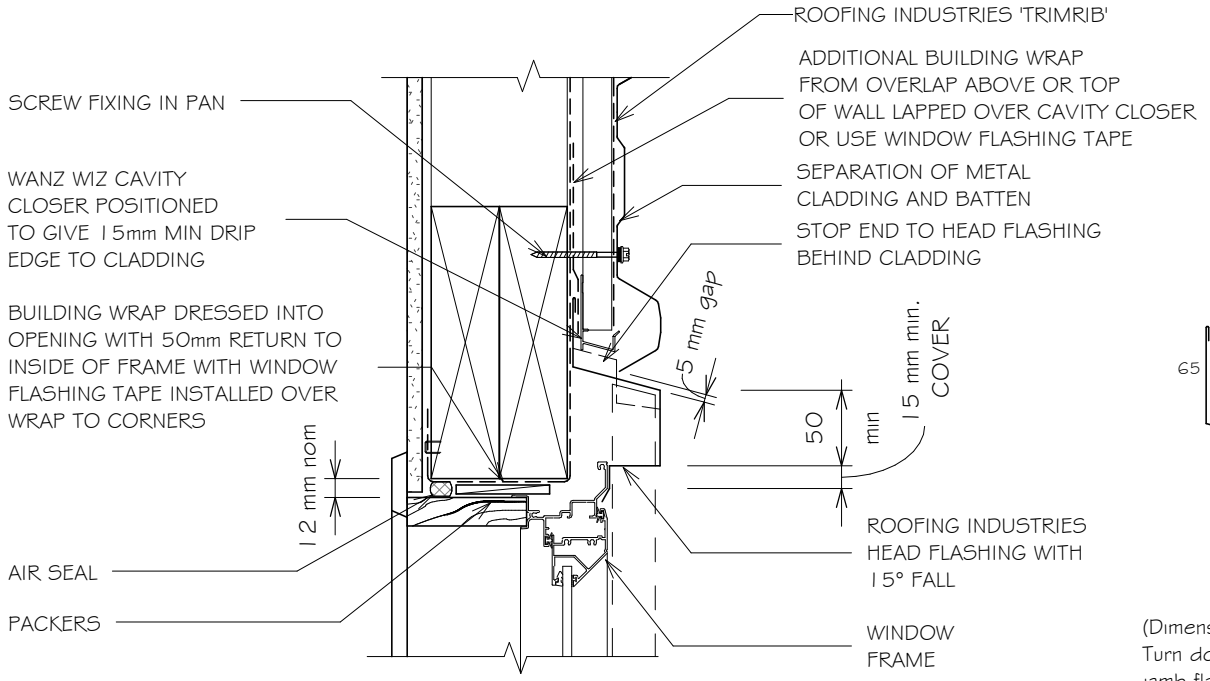

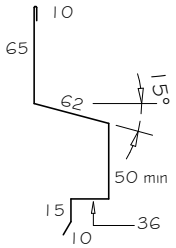

(Dimensions are indicative only)
Turn down end of head flashing to jamb flashing.
At end of head flashing under sheet may need flattening or carefully slit and seal.

GENERAL NOTES:

1. REFER TO E2/AS1 FOR GENERAL WINDOW OPENING FOR WRAPPING OF FRAMED OPENING PRIOR TO WINDOW INSTALLATION.
2. A MIN. OF 8mm EFFECTIVE COVER AT SILLS SHALL BE PERMITTED WHERE NECESSARY TO ALLOW FOR TOLERANCES.
3. WINDOW PROFILE TO BE SELECTED TO ACHIEVE COVER SHOWN IN DETAILS.
4. ARCHITRAVE'S ARE SHOWN FOR CONSISTENCY ONLY, DETAIL MAY BE USED WITH REBATED LINER.
5. WHERE SUPPORT BRACKETS ARE REQUIRED BY THE WINDOW MANUFACTURER TO CARRY THE FRAME AND GLAZING LOADS THEY MUST BE SUPPLIED AS AN INTEGRAL PART OF THE WINDOW MANUFACTURER'S RECOMMENDATIONS.
6. LIAISE WITH WINDOW MANUFACTURER PRIOR TO INSTALLATION.
7. SEAL HEAD FLASHING TO WINDOW IN VERY HIGH & EXTRA HIGH WIND ZONES.

REFERENCE FLASHINGS:
NZ METAL ROOF AND WALL CLADDING CODE OF PRACTICE AND E2/AS1.
DIMENSIONS ARE INDICATIVE ONLY.

NOTES:

- These details are generally in compliance with E2/AS1 and/or the NZ Metal Roof & Wall Cladding Code of Practice and in some cases specific details by 'Roofing Industries'.
- The building designer is ultimatley responsible to ensure that details used meet the requirements of the NZ Building Code for the specific project.
- Details of the supporting structure including cavity battens are indicative only and are the responsibility of the building designer. For steel framed buildings thermal break cavity battens may be required.
- Underlay selection and building wrap types are the responsibility of the designer. When rigid wall underlay is required it is the designers responsibility to ensure the correct type is used and follow the manufacturers recommendation for installation.
- These details are for Roofing Industries profile/s as nominated and may not be applicable to other profiles.
- This drawing is the copyright of 'Roofing Industries' and can only be copied or reproduced with their permission.
- Further information can be obtained from the NZ Metal Roof & Wall Cladding Code of Practice: www.metalroofing.org.nz OR NZBC clause E2/AS1.

Roofing Industries
roof.co.nz

RESIDENTIAL TRIMRIB® WALL CLADDING
JAMB FLASHING FOR HORIZONTAL CLADDING
(RECESSED WINDOW/DOOR)

Detail Number: RI-RTW032B
Date drawn: 07/07/2017
Scale: 1 : 5@ A4

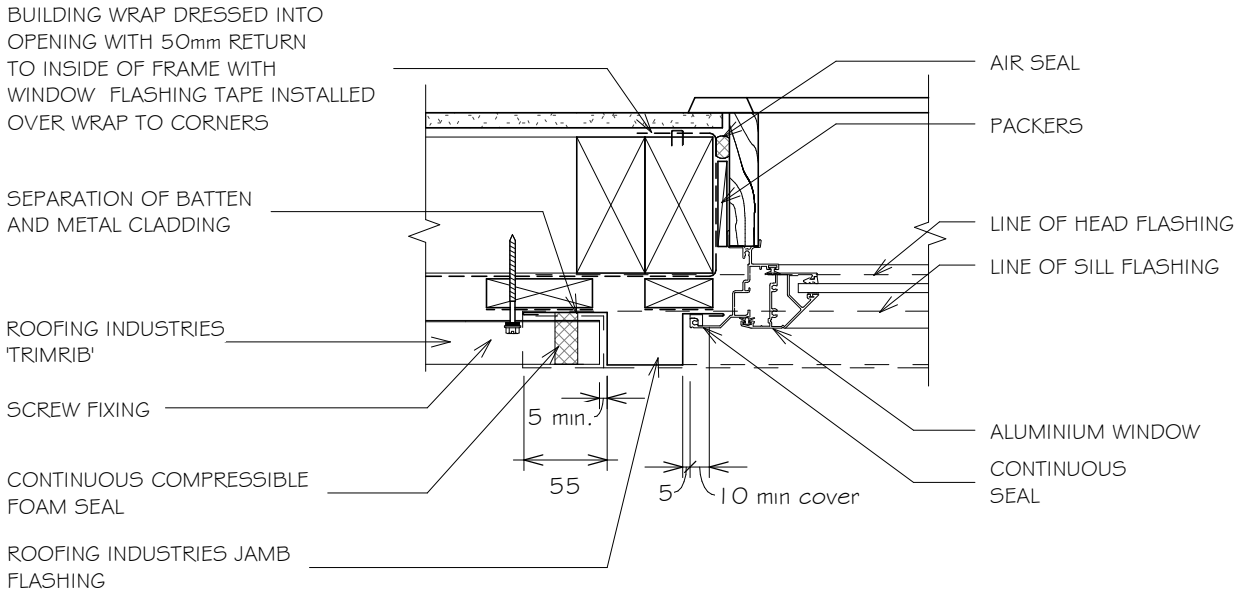

GENERAL NOTES:

1. REFER TO E2/AS1 FOR GENERAL WINDOW OPENING FOR WRAPPING OF FRAMED OPENING PRIOR TO WINDOW INSTALLATION.
2. A MIN. OF 8mm EFFECTIVE COVER AT SILLS SHALL BE PERMITTED WHERE NECESSARY TO ALLOW FOR TOLERANCES.
3. WINDOW PROFILE TO BE SELECTED TO ACHIEVE COVER SHOWN IN DETAILS.
4. ARCHITRAVE'S ARE SHOWN FOR CONSISTENCY ONLY, DETAIL MAY BE USED WITH REBATED LINER.
5. WHERE SUPPORT BRACKETS ARE REQUIRED BY THE WINDOW MANUFACTURER TO CARRY THE FRAME AND GLAZING LOADS THEY MUST BE SUPPLIED AS AN INTEGRAL PART OF THE WINDOW MANUFACTURER'S RECOMMENDATIONS.
6. LIAISE WITH WINDOW MANUFACTURER PRIOR TO INSTALLATION.

REFERENCE FLASHINGS:
NZ METAL ROOF AND WALL CLADDING CODE OF PRACTICE AND E2/AS1.
DIMENSIONS ARE INDICATIVE ONLY.

SOAKER FLASHING MAY BE REQUIRED IN WIND ZONE GREATER THAN VERY HIGH. BACK TRAY TO RUN FROM TOP OF HEAD FLASHING TO GROUND OR EXIT POINT.

NOTES:

- These details are generally in compliance with E2/AS1 and/or the NZ Metal Roof & Wall Cladding Code of Practice and in some cases specific details by 'Roofing Industries'.
- The building designer is ultimatley responsible to ensure that details used meet the requirements of the NZ Building Code for the specific project.
- Details of the supporting structure including cavity battens are indicative only and are the responsibility of the building designer. For steel framed buildings thermal break cavity battens may be required.
- Underlay selection and building wrap types are the responsibility of the designer. When rigid wall underlay is required it is the designers responsibility to ensure the correct type is used and follow the manufacturers recommendation for installation.
- These details are for Roofing Industries profile/s as nominated and may not be applicable to other profiles.
- This drawing is the copyright of 'Roofing Industries' and can only be copied or reproduced with their permission.
- Further information can be obtained from the NZ Metal Roof & Wall Cladding Code of Practice: www.metalroofing.org.nz OR NZBC clause E2/AS1.

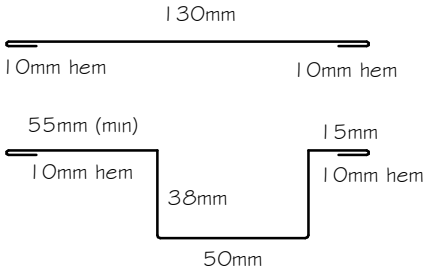

Roofing Industries
roof.co.nz

RESIDENTIAL TRIMRIB® WALL CLADDING
SILL FLASHING FOR HORIZONTAL CLADDING
(RECESSED WINDOW/DOOR)

Detail Number: RI-RTW032C
Date drawn: 07/07/2017
Scale: 1 : 5@ A4

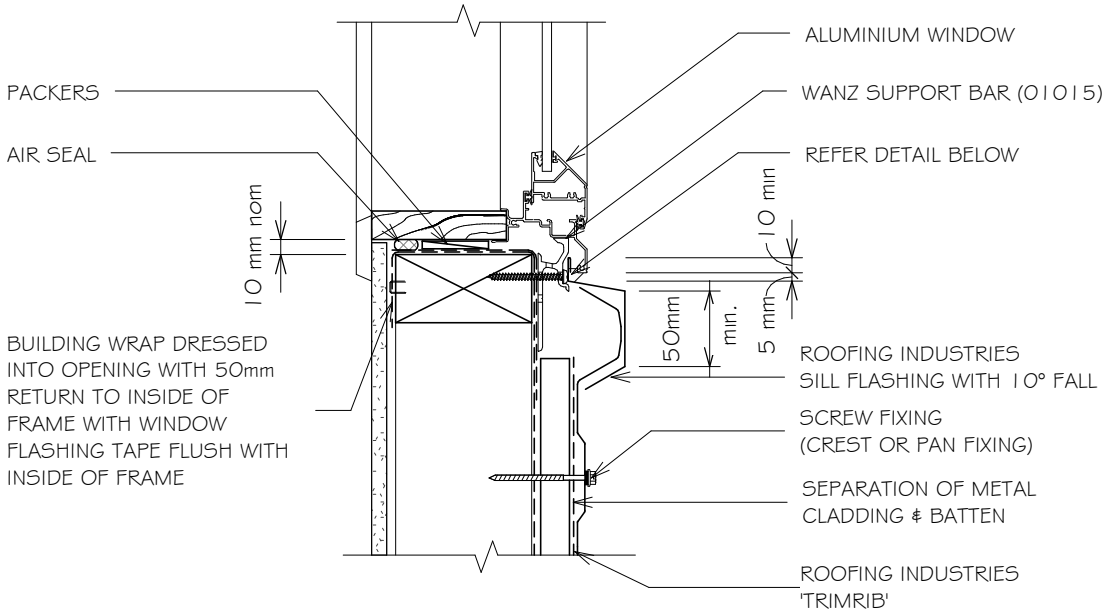

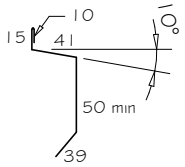

Sill flashings stop ended to receive jamb flashings (Dimensions are indicative only & show minimum lap covers)

GENERAL NOTES:

1. REFER TO E2/AS1 FOR GENERAL WINDOW OPENING FOR WRAPPING OF FRAMED OPENING PRIOR TO WINDOW INSTALLATION.
2. A MIN. OF 8mm EFFECTIVE COVER AT SILLS SHALL BE PERMITTED WHERE NECESSARY TO ALLOW FOR TOLERANCES.
3. WINDOW PROFILE TO BE SELECTED TO ACHIEVE COVER SHOWN IN DETAILS.
4. ARCHITRAVE'S ARE SHOWN FOR CONSISTENCY ONLY, DETAIL MAY BE USED WITH REBATED LINER.
5. WHERE SUPPORT BRACKETS ARE REQUIRED BY THE WINDOW MANUFACTURER TO CARRY THE FRAME AND GLAZING LOADS THEY MUST BE SUPPLIED AS AN INTEGRAL PART OF THE WINDOW MANUFACTURER'S RECOMMENDATIONS.
6. LIASE WITH WINDOW MANUFACTURER PRIOR TO INSTALLATION.

REFERENCE FLASHINGS:
NZ METAL ROOF AND WALL CLADDING CODE OF PRACTICE
NZMRM AND E2/AS1.
DIMENSIONS ARE INDICATIVE ONLY

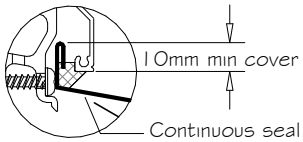

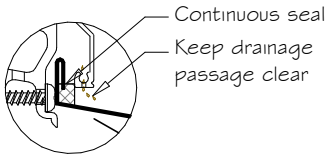

NOTE:
Sill sealing method for flange end type drainage systems

NOTES:

- These details are generally in compliance with E2/AS1 and/or the NZ Metal Roof & Wall Cladding Code of Practice and in some cases specific details by 'Roofing Industries'.
- The building designer is ultimatley responsible to ensure that details used meet the requirements of the NZ Building Code for the specific project.
- Details of the supporting structure including cavity battens are indicative only and are the responsibility of the building designer. For steel framed buildings thermal break cavity battens may be required.
- Underlay selection and building wrap types are the responsibility of the designer. When rigid wall underlay is required it is the designers responsibility to ensure the correct type is used and follow the manufacturers recommendation for installation.
- These details are for Roofing Industries profile/s as nominated and may not be applicable to other profiles.
- This drawing is the copyright of 'Roofing Industries' and can only be copied or reproduced with their permission.
- Further information can be obtained from the NZ Metal Roof & Wall Cladding Code of Practice: www.metalroofing.org.nz OR NZBC clause E2/AS1.

Roofing Industries
roof.co.nz

RESIDENTIAL TRIMRIB® WALL CLADDING METER BOX HEAD FLASHING FOR HORIZONTAL CLADDING

Detail Number: RI-RTW040A
Date drawn: 07/07/2017
Scale: 1 : 5@ A4

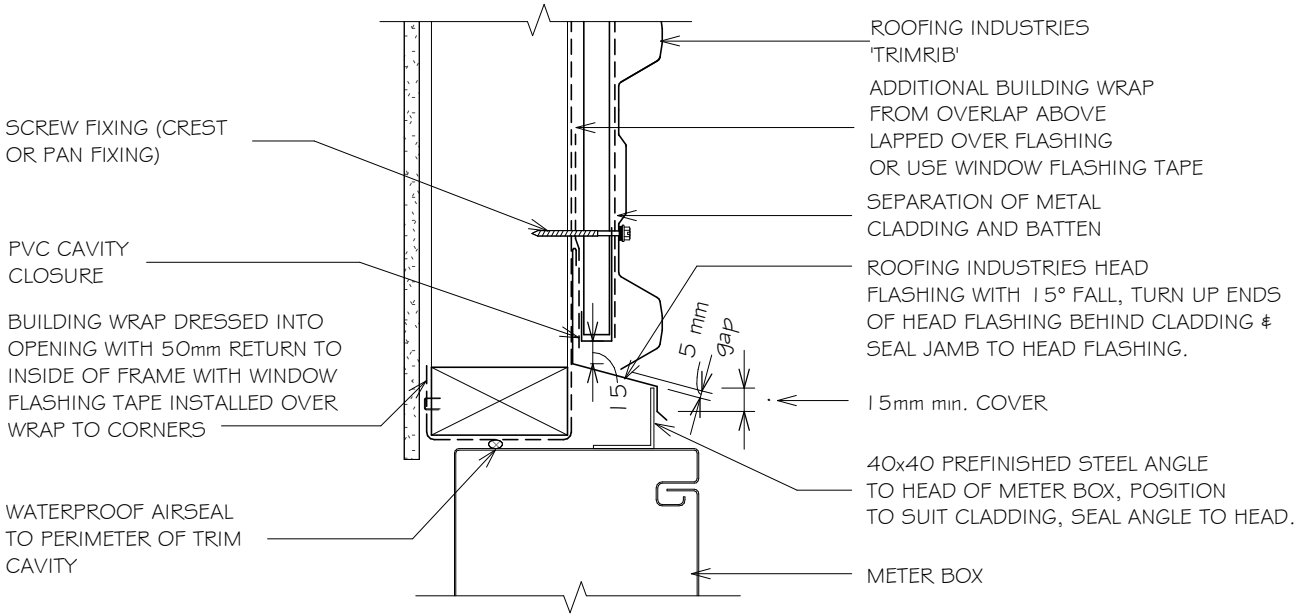

GENERAL NOTES:

1. CAVITY BATTENS CONTAINING CORROSIVE MATERIAL MUST BE SEPARATED FROM METAL CLADDING BY DPC, BUILDING WRAP, PVC OR PAINTING.
2. REFER TO E2/AS1 FOR GENERAL METERBOX AND SIMILAR PENETRATIONS / OPENINGS.

NOTES:

- These details are generally in compliance with E2/AS1 and/or the NZ Metal Roof & Wall Cladding Code of Practice and in some cases specific details by 'Roofing Industries'.
- The building designer is ultimatley responsible to ensure that details used meet the requirements of the NZ Building Code for the specific project.
- Details of the supporting structure including cavity battens are indicative only and are the responsibility of the building designer. For steel framed buildings thermal break cavity battens may be required.
- Underlay selection and building wrap types are the responsibility of the designer. When rigid wall underlay is required it is the designers responsibility to ensure the correct type is used and follow the manufacturers recommendation for installation.
- These details are for Roofing Industries profile/s as nominated and may not be applicable to other profiles.
- This drawing is the copyright of 'Roofing Industries' and can only be copied or reproduced with their permission.
- Further information can be obtained from the NZ Metal Roof & Wall Cladding Code of Practice: www.metalroofing.org.nz OR NZBC clause E2/AS1.

Roofing Industries
roof.co.nz

RESIDENTIAL TRIMRIB® WALL CLADDING METER BOX SIDE FLASHING FOR HORIZONTAL CLADDING

Detail Number: RI-RTW041A
Date drawn: 07/07/2017
Scale: 1 : 5@ A4

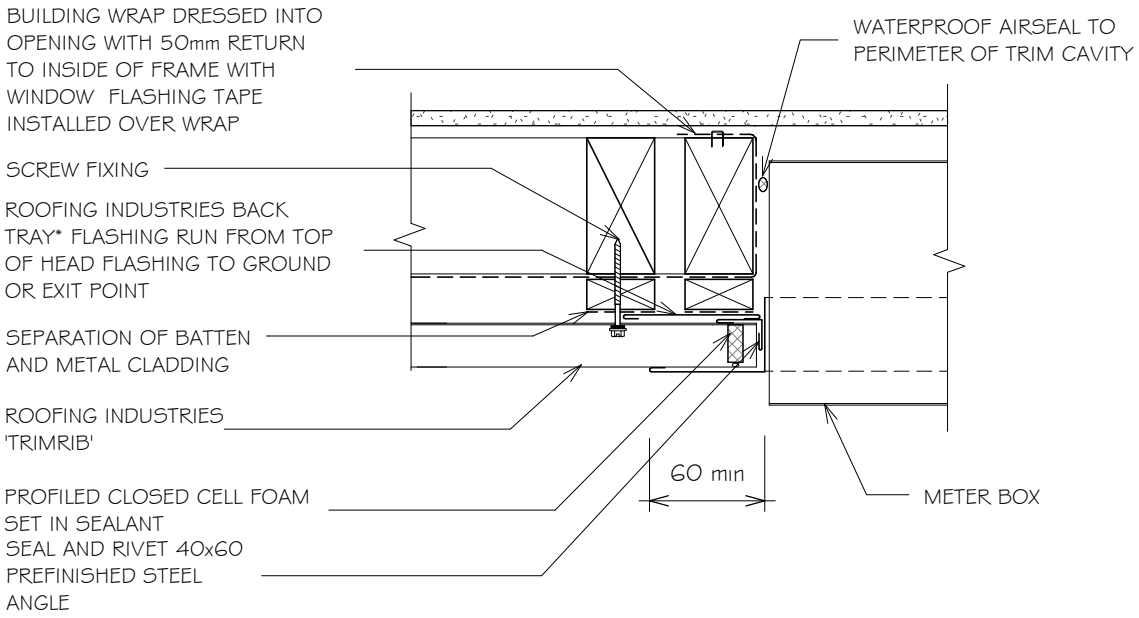

GENERAL NOTES:

1. CAVITY BATTENS CONTAINING CORROSIVE MATERIAL MUST BE SEPARATED FROM METAL CLADDING BY DPC, BUILDING WRAP, PVC OR PAINTING.
2. REFER TO E2/AS1 FOR GENERAL METERBOX AND SIMILAR PENETRATIONS / OPENINGS.

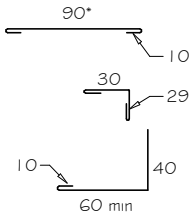

* Back tray size may require to increase to ensure coverage at ends of head flashing.
(Dimensions are indicative only)
Turn down end of head flashing

NOTES:

- These details are generally in compliance with E2/AS1 and/or the NZ Metal Roof & Wall Cladding Code of Practice and in some cases specific details by 'Roofing Industries'.
- The building designer is ultimatley responsible to ensure that details used meet the requirements of the NZ Building Code for the specific project.
- Details of the supporting structure including cavity battens are indicative only and are the responsibility of the building designer. For steel framed buildings thermal break cavity battens may be required.
- Underlay selection and building wrap types are the responsibility of the designer. When rigid wall underlay is required it is the designers responsibility to ensure the correct type is used and follow the manufacturers recommendation for installation.
- These details are for Roofing Industries profile/s as nominated and may not be applicable to other profiles.
- This drawing is the copyright of 'Roofing Industries' and can only be copied or reproduced with their permission.
- Further information can be obtained from the NZ Metal Roof & Wall Cladding Code of Practice: www.metalroofing.org.nz OR NZBC clause E2/AS1.

Roofing Industries
roof.co.nz

RESIDENTIAL TRIMRIB® WALL CLADDING METER BOX BASE FLASHING FOR HORIZONTAL CLADDING

Detail Number: RI-RTW042A
Date drawn: 07/07/2017
Scale: 1 : 5@ A4

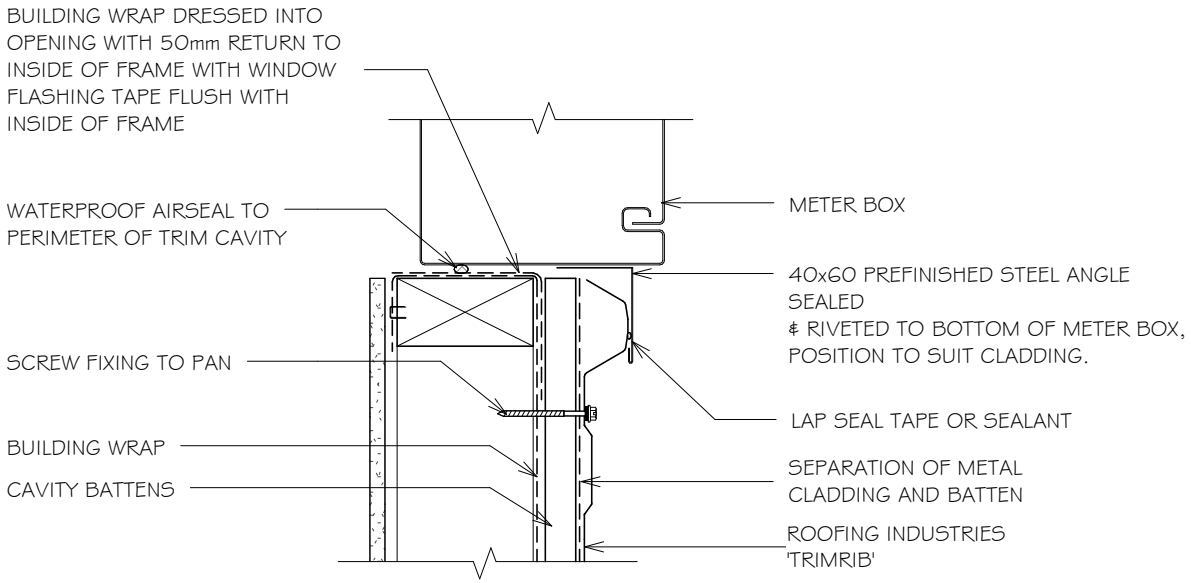

GENERAL NOTES:

1. CAVITY BATTENS CONTAINING CORROSIVE MATERIAL MUST BE SEPARATED FROM METAL CLADDING BY DPC, BUILDING WRAP, PVC OR PAINTING.
2. REFER TO E2/AS1 FOR GENERAL METERBOX AND SIMILAR PENETRATIONS / OPENINGS.

NOTES:

- These details are generally in compliance with E2/AS1 and/or the NZ Metal Roof & Wall Cladding Code of Practice and in some cases specific details by 'Roofing Industries'.
- The building designer is ultimatley responsible to ensure that details used meet the requirements of the NZ Building Code for the specific project.
- Details of the supporting structure including cavity battens are indicative only and are the responsibility of the building designer. For steel framed buildings thermal break cavity battens may be required.
- Underlay selection and building wrap types are the responsibility of the designer. When rigid wall underlay is required it is the designers responsibility to ensure the correct type is used and follow the manufacturers recommendation for installation.
- These details are for Roofing Industries profile/s as nominated and may not be applicable to other profiles.
- This drawing is the copyright of 'Roofing Industries' and can only be copied or reproduced with their permission.
- Further information can be obtained from the NZ Metal Roof & Wall Cladding Code of Practice: www.metalroofing.org.nz OR NZBC clause E2/AS1.

Roofing Industries
roof.co.nz