EUROSTYLE SPANLOK™

RESIDENTIAL SPANLOK SHEET LIST

Detail Number: RI-ES45-000A

Date drawn: 02/02/2018

Residential Spanlok Sheet List		
Sheet Number	Type	Sheet Name
EUROSTYLE SPANLOK™		
RI-ES45-000A	EUROSTYLE SPANLOK™	RESIDENTIAL SPANLOK SHEET LIST
RI-ES45-000B	EUROSTYLE SPANLOK™	PROFILES & ACCESSORIES
RI-ES45-000C	EUROSTYLE SPANLOK™	PROFILE SUMMARY - SPANLOK™
RI-ES45R001A-1	EUROSTYLE SPANLOK™ ROOFING	BARGE DETAIL (TYPE 1)
RI-ES45R001AS-1	EUROSTYLE SPANLOK™ ROOFING	BARGE DETAIL (TYPE 1)
RI-ES45R001B-1	EUROSTYLE SPANLOK™ ROOFING	BARGE DETAIL (TYPE 2)
RI-ES45R001BS-1	EUROSTYLE SPANLOK™ ROOFING	BARGE DETAIL (TYPE 2)
RI-ES45R001C-1	EUROSTYLE SPANLOK™ ROOFING	BARGE DETAIL (TYPE 3)
RI-ES45R001CS-1	EUROSTYLE SPANLOK™ ROOFING	BARGE DETAIL (TYPE 3)
RI-ES45R002A	EUROSTYLE SPANLOK™ ROOFING	TYPICAL HEAD BARGE DETAIL
RI-ES45R002AS	EUROSTYLE SPANLOK™ ROOFING	TYPICAL HEAD BARGE DETAIL
RI-ES45R003A	EUROSTYLE SPANLOK™ ROOFING	TYPICAL CHANGE IN PITCH
RI-ES45R003AS	EUROSTYLE SPANLOK™ ROOFING	TYPICAL CHANGE IN PITCH
RI-ES45R003B	EUROSTYLE SPANLOK™ ROOFING	TYPICAL CHANGE IN PITCH
RI-ES45R003BS	EUROSTYLE SPANLOK™ ROOFING	TYPICAL CHANGE IN PITCH
RI-ES45R004A	EUROSTYLE SPANLOK™ ROOFING	GUTTER APRON DETAIL (NON VENTED)
RI-ES45R004AS	EUROSTYLE SPANLOK™ ROOFING	GUTTER APRON DETAIL (NON VENTED)
RI-ES45R004B	EUROSTYLE SPANLOK™ ROOFING	GUTTER APRON DETAIL (VENTILATED)
RI-ES45R004BS	EUROSTYLE SPANLOK™ ROOFING	GUTTER APRON DETAIL (VENTILATED)
RI-ES45R004C	EUROSTYLE SPANLOK™ ROOFING	GUTTER APRON DETAIL (NO SOFFIT)
RI-ES45R004CS	EUROSTYLE SPANLOK™ ROOFING	GUTTER APRON DETAIL (NO SOFFIT)
RI-ES45R005C	EUROSTYLE SPANLOK™ ROOFING	VENTILATED RIDGE AND HIP DETAIL
RI-ES45R005CS	EUROSTYLE SPANLOK™ ROOFING	VENTILATED RIDGE AND HIP DETAIL
RI-ES45R006B	EUROSTYLE SPANLOK™ ROOFING	TYPICAL VALLEY DETAIL
RI-ES45R006B-1	EUROSTYLE SPANLOK™ ROOFING	TYPICAL VALLEY DETAIL
RI-ES45R006BS	EUROSTYLE SPANLOK™ ROOFING	TYPICAL VALLEY DETAIL
RI-ES45R006BS-1	EUROSTYLE SPANLOK™ ROOFING	TYPICAL VALLEY DETAIL
RI-ES45R006C	EUROSTYLE SPANLOK™ ROOFING	DORMER VALLEY DETAIL
RI-ES45R006CS	EUROSTYLE SPANLOK™ ROOFING	DORMER VALLEY DETAIL
RI-ES45R007A	EUROSTYLE SPANLOK™ ROOFING	INTERNAL GUTTER
RI-ES45R007AS	EUROSTYLE SPANLOK™ ROOFING	INTERNAL GUTTER
RI-ES45R010A-1	EUROSTYLE SPANLOK™ ROOFING	PARALLEL APRON FLASHING (NON CAVITY) TYPE 1
RI-ES45R010A-1A	EUROSTYLE SPANLOK™ ROOFING	PARALLEL APRON FLASHING (NON CAVITY) TYPE 2
RI-ES45R010AS-1	EUROSTYLE SPANLOK™ ROOFING	PARALLEL APRON FLASHING (NON CAVITY) TYPE 1
RI-ES45R010AS-1A	EUROSTYLE SPANLOK™ ROOFING	PARALLEL APRON FLASHING (NON CAVITY) TYPE 2
RI-ES45R010B-1	EUROSTYLE SPANLOK™ ROOFING	PARALLEL APRON FLASHING (CAVITY) TYPE 1
RI-ES45R010B-1A	EUROSTYLE SPANLOK™ ROOFING	PARALLEL APRON FLASHING (CAVITY) TYPE 2
RI-ES45R010BS-1	EUROSTYLE SPANLOK™ ROOFING	PARALLEL APRON FLASHING (CAVITY) TYPE 1
RI-ES45R010BS-1A	EUROSTYLE SPANLOK™ ROOFING	PARALLEL APRON FLASHING (CAVITY) TYPE 2
RI-ES45R011AB	EUROSTYLE SPANLOK™ ROOFING	TYPICAL APRON FLASHING (NON CAVITY) TYPE 1 - OPTION 2
RI-ES45R011ABS	EUROSTYLE SPANLOK™ ROOFING	TYPICAL APRON FLASHING (NON CAVITY) TYPE 1
RI-ES45R011AS	EUROSTYLE SPANLOK™ ROOFING	TYPICAL APRON FLASHING (NON CAVITY) TYPE 2
RI-ES45R011BS	EUROSTYLE SPANLOK™ ROOFING	TYPICAL APRON FLASHING (CAVITY) TYPE 1
RI-ES45R080A	EUROSTYLE SPANLOK™ ROOFING	PENETRATION FLASHING DETAILS
RI-ES45R080A-1	EUROSTYLE SPANLOK™ ROOFING	PENETRATION FLASHING DETAILS
RI-ES45R080AS	EUROSTYLE SPANLOK™ ROOFING	PENETRATION FLASHING DETAILS

Residential Spanlok Sheet List		
Sheet Number	Type	Sheet Name
RI-ES45R080AS-1	EUROSTYLE SPANLOK™ ROOFING	PENETRATION FLASHING DETAILS
RI-ES45R081A	EUROSTYLE SPANLOK™ ROOFING	PENETRATION FLASHING CROSS SECTION
RI-ES45R081AS	EUROSTYLE SPANLOK™ ROOFING	PENETRATION FLASHING CROSS SECTION
RI-ES45W003A-1	EUROSTYLE SPANLOK™ WALL CLADDING	WALL CLADDING EXTERNAL VERTICAL CORNER ON CAVITY
RI-ES45W003AS-1	EUROSTYLE SPANLOK™ WALL CLADDING	WALL CLADDING EXTERNAL VERTICAL CORNER ON CAVITY
RI-ES45W003B	EUROSTYLE SPANLOK™ WALL CLADDING	WALL CLADDING EXTERNAL VERTICAL CORNER ON CAVITY WITH CLADDING CHANGE
RI-ES45W004A-1	EUROSTYLE SPANLOK™ WALL CLADDING	WALL CLADDING INTERNAL VERTICAL CORNER ON CAVITY
RI-ES45W004AS-1	EUROSTYLE SPANLOK™ WALL CLADDING	WALL CLADDING INTERNAL VERTICAL CORNER ON CAVITY
RI-ES45W004B	EUROSTYLE SPANLOK™ WALL CLADDING	WALL CLADDING INTERNAL VERTICAL CORNER ON CAVITY WITH CLADDING CHANGE
RI-ES45W005A	EUROSTYLE SPANLOK™ WALL CLADDING	WALL CLADDING BASE OF VERTICAL CLADDING ON CAVITY
RI-ES45W005AS	EUROSTYLE SPANLOK™ WALL CLADDING	WALL CLADDING BASE OF VERTICAL CLADDING ON CAVITY
RI-ES45W012A	EUROSTYLE SPANLOK™ WALL CLADDING	WINDOW / DOOR HEAD FLASHING FOR VERTICAL CLADDING
RI-ES45W012AS	EUROSTYLE SPANLOK™ WALL CLADDING	WINDOW / DOOR HEAD FLASHING FOR VERTICAL CLADDING
RI-ES45W012B	EUROSTYLE SPANLOK™ WALL CLADDING	WINDOW / DOOR JAMB FLASHING FOR VERTICAL CLADDING
RI-ES45W012BS	EUROSTYLE SPANLOK™ WALL CLADDING	WINDOW / DOOR JAMB FLASHING FOR VERTICAL CLADDING
RI-ES45W012C	EUROSTYLE SPANLOK™ WALL CLADDING	WINDOW / DOOR SILL FLASHING FOR VERTICAL CLADDING
RI-ES45W012CS	EUROSTYLE SPANLOK™ WALL CLADDING	WINDOW / DOOR SILL FLASHING FOR VERTICAL CLADDING

Roofing Industries

roof.co.nz

EUROSTYLE SPANLOK™
PROFILES & ACCESSORIES

Detail Number: RI-ES45-000B
Date drawn: 02/02/2018
Scale: 1 : 5@ A3

ROOFING INDUSTRIES EUROSTYLE SPANLOK™ SECRET CLIP FIXED

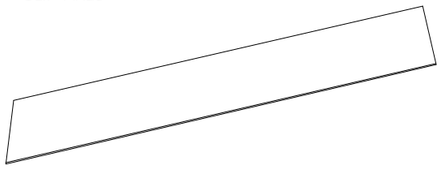

EUROSTYLE BARGE FLASHING

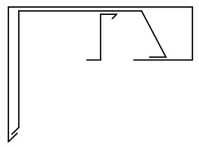

EUROSTYLE BARGE FLASHING

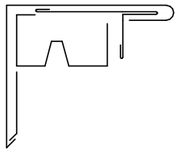

ROOFING INDUSTRIES EUROSTYLE HEAD BARGE FLASHING

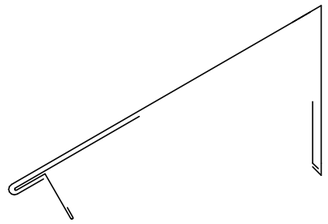

ROOFING INDUSTRIES CHANGE IN PITCH FLASHING

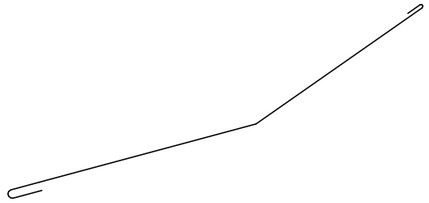

ROOFING INDUSTRIES EUROSTYLE SPANLOK™ SECRET CLIP FIXED

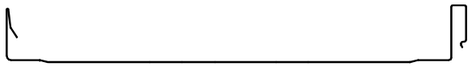

ROOFING INDUSTRIES UNDERFLASHING

ROOFING INDUSTRIES GUTTER APRON FLASHING

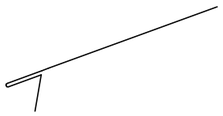

ROOFING INDUSTRIES ANGLE FLASHING

ROOFING INDUSTRIES APRON FLASHING

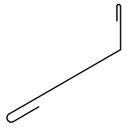

Fixings

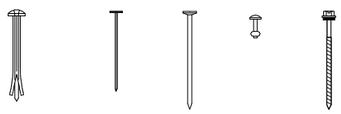

ROOFING INDUSTRIES RIDGE FLASHING

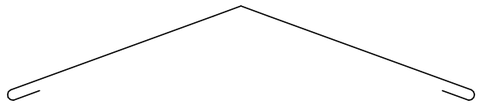

CAVITY CLOSER

METAL ANGLE

ROOFING INDUSTRIES VALLEY GUTTER

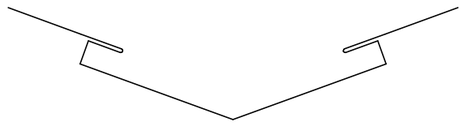

ROOFING INDUSTRIES VALLEY GUTTER

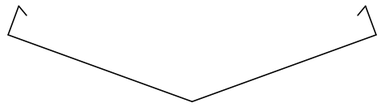

ROOFING INDUSTRIES DORMER VALLEY GUTTER

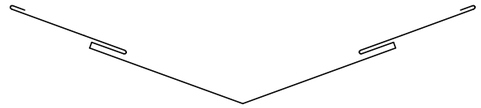

HEAD FLASHING

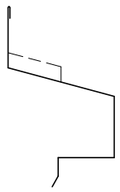

SILL FLASHING

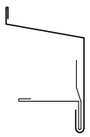

JAMB FLASHING

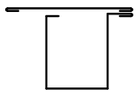

ROOFING INDUSTRIES SPANLOK EXTERNAL CORNER

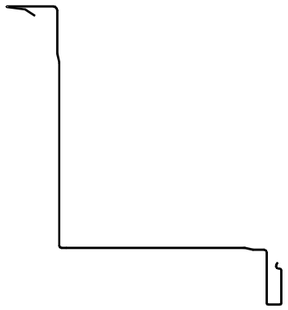

ROOFING INDUSTRIES SPANLOK INTERNAL CORNER

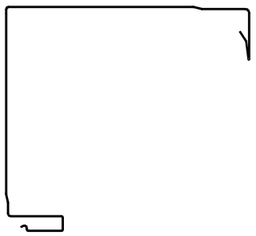

ROOFING INDUSTRIES SPANLOK EXTERNAL CORNER

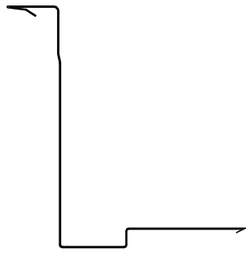

ROOFING INDUSTRIES SPANLOK INTERNAL CORNER

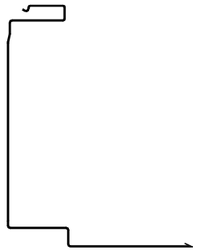

Roofing Industries
roof.co.nz

EUROSTYLE SPANLOK™
PROFILE SUMMARY - SPANLOK™

Detail Number: RI-ES45-000C
Date drawn: 02/02/2018
Scale: 1 : 5@ A4

(All dimensions are nominal and in mm.)

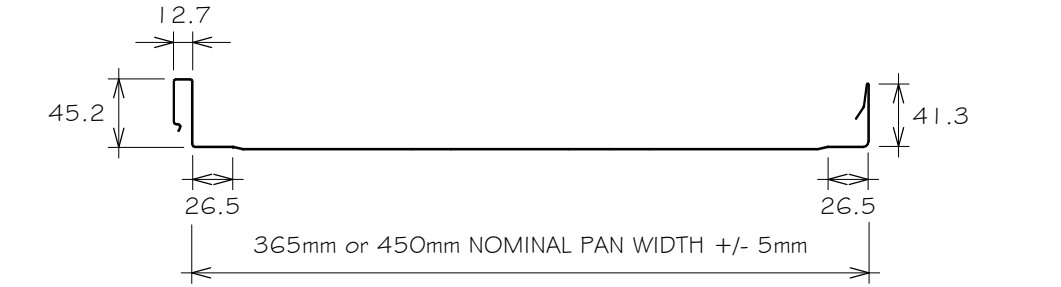

SWAGE ARE AVAILABLE ON REQUEST. FOR SPECIAL PAN WIDTH REFER ROOFING INDUSTRIES

SPANLOK™

COIL SIZE	610mm	525mm
PAN WIDTH	450mm	365mm

Add 5mm to above pan size for effective cover.

NON PLY SUBSTRATE

STANDARD MATERIAL TYPES	GAUGE
COLORCOTE ZINACORE / COLORSTEEL ENDURA	0.55mm
COLORCOTE MAGNAFLOW / COLORSTEEL MAXX IN SEA SPRAY ZONE	0.55mm
COLORCOTE ALUMIGARD	0.90mm

NOTES:

1. PANEL WIDTHS ARE GENERALLY DETERMINED BY COIL SIZE AVAILABILITY.
2. FOR SIZES OUTSIDE THESE NORMAL COIL WIDTHS PLEASE CONTACT ROOFING INDUSTRIES.
3. ROOFING INDUSTRIES 'EUROSTYLE SPANLOK 45' CAN BE INSTALLED WITHOUT A PLY SUBSTRATE, CARE SHOULD BE TAKEN TO REDUCE CANNING. REFER TO ROOFING INDUSTRIES LTD FOR MATERIAL SUBSTRATE ADVICE.
4. ALL DIMENSIONS SHOWN ON DRAWINGS ARE NOMINAL +/- 5mm

Roofing Industries
roof.co.nz

EUROSTYLE SPANLOK™ ROOFING
BARGE DETAIL (TYPE 1)

Detail Number: RI-ES45R001A-1

Date drawn: 02/02/2018

Scale: 1 : 5@ A4

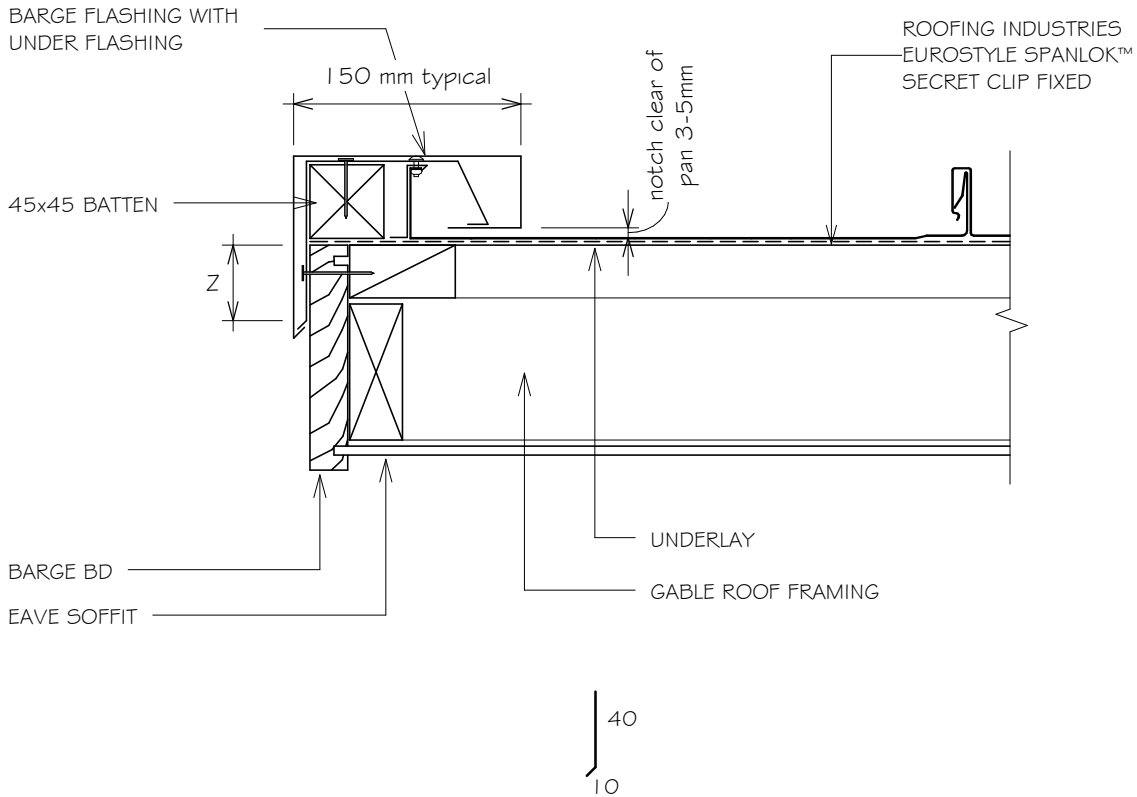

SITE WIND ZONE (As per NZS3604)		MINIMUM Z (5)
SITUATION 1	(1)	50mm (4)
SITUATION 2	(2)	75mm (4)
SITUATION 3	(3)	90mm (4)

NOTES:

1. SITUATION 1: IN LOW, MEDIUM OR HIGH WIND ZONES, WHERE ROOF PITCH IS 10° OR GREATER.
2. SITUATION 2: FOR ALL ROOF PITCHES IN VERY HIGH WIND ZONES, FOR ALL LESSER WIND ZONES WHERE ROOF PITCH IS LESS THAN 10°.
3. SITUATION 3: FOR ALL ROOF PITCHES IN EXTRA HIGH ZONES.
4. EXCLUDING DRIP EDGE.
5. INCREASE DISTANCE 'Z' BY 25mm WHEN AGAINST A PROFILED SURFACE OR TO 100mm WHICHEVER IS THE LESSER.
6. HIGH TO EXTRA HIGH WIND ZONE DOUBLE FIX UNDERFLASHINGS
7. ALLOW FOR SEPARATION FROM ANY CORROSIVE TIMBER TREATMENTS.
8. ALL DIMENSIONS SHOWN ON DRAWINGS ARE NOMINAL +/- 5mm

NOTES:

- These details are generally in compliance the NZ Metal Roof & Wall Cladding Code of Practice and in some cases specific details by 'Roofing Industries'. Eurostyle falls outsider the criteria of E2/AS1 and this document is therefore not applicable.
- The building designer is ultimatley responsible to ensure that details used meet the requirements of the NZ Building Code for the specific project.
- Details of the supporting structure including cavity battens are indicative only and are the responsibility of the building designer. For steel framed buildings thermal break cavity battens may be required.
- Underlay selection and building wrap types are the responsibility of the designer, Netting or other support is generally required at roof pitches less than 10 degrees combined with a self supporting paper. At roof pitches of 10° and above where non self supporting paper is used or purlin spacing is in excess of self supporting criteria, netting or other support should be used. Alternative support to netting should be used in severe coastal environments including when aluminium is used. (Refer to NZS 2295)
- These details are for Roofing Industries profile/s as nominated and may not be applicable to other profiles.
- This drawing is the copyright of 'Roofing Industries' and can only be copied or reproduced with their permission.
- These details to be read with Roofing Industries profile technical summary regarding wind loads and fixings.
- Further information can be obtained from the NZ Metal Roof & Wall Cladding Code of Practice: www.metalroofing.org.nz or E2/AS1.

Roofing Industries
roof.co.nz

EUROSTYLE SPANLOK™ ROOFING
BARGE DETAIL (TYPE 1)

Detail Number: RI-ES45R001AS-1

Date drawn: 02/02/2018

Scale: 1 : 5@ A4

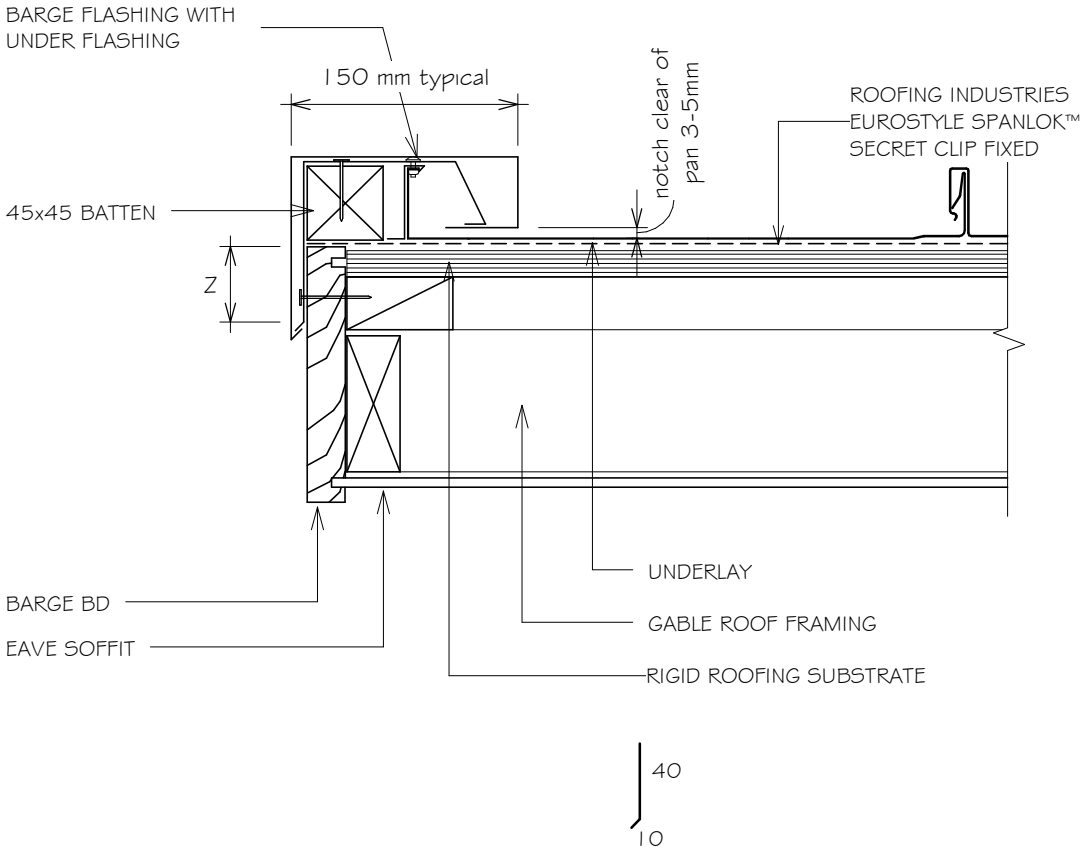

SITE WIND ZONE (As per NZS3604)		MINIMUM Z (5)	
SITUATION 1	(1)	50mm	(4)
SITUATION 2	(2)	75mm	(4)
SITUATION 3	(3)	90mm	(4)

NOTES:

1. SITUATION 1: IN LOW, MEDIUM OR HIGH WIND ZONES, WHERE ROOF PITCH IS 10° OR GREATER.
2. SITUATION 2: FOR ALL ROOF PITCHES IN VERY HIGH WIND ZONES, FOR ALL LESSER WIND ZONES WHERE ROOF PITCH IS LESS THAN 10°.
3. SITUATION 3: FOR ALL ROOF PITCHES IN EXTRA HIGH ZONES.
4. EXCLUDING DRIP EDGE.
5. INCREASE DISTANCE 'Z' BY 25mm WHEN AGAINST A PROFILED SURFACE OR TO 100mm WHICHEVER IS THE LESSER.
6. HIGH TO EXTRA HIGH WIND ZONE DOUBLE FIX UNDERFLASHINGS
7. ALLOW FOR SEPARATION FROM ANY CORROSIVE TIMBER TREATMENTS.
8. ALL DIMENSIONS SHOWN ON DRAWINGS ARE NOMINAL +/- 5mm

NOTES:

- These details are generally in compliance the NZ Metal Roof & Wall Cladding Code of Practice and in some cases specific details by 'Roofing Industries'. Eurostyle falls outsider the criteria of E2/AS1 and this document is therefore not applicable.
- The building designer is ultimatley responsible to ensure that details used meet the requirements of the NZ Building Code for the specific project.
- Details of the supporting structure including cavity battens are indicative only and are the responsibility of the building designer. For steel framed buildings thermal break cavity battens may be required.
- Underlay selection and building wrap types are the responsibility of the designer, Netting or other support is generally required at roof pitches less than 10 degrees combined with a self supporting paper. At roof pitches of 10° and above where non self supporting paper is used or purlin spacing is in excess of self supporting criteria, netting or other support should be used. Alternative support to netting should be used in severe coastal environments including when aluminium is used. (Refer to NZS 2295)
- These details are for Roofing Industries profile/s as nominated and may not be applicable to other profiles.
- This drawing is the copyright of 'Roofing Industries' and can only be copied or reproduced with their permission.
- These details to be read with Roofing Industries profile technical summary regarding wind loads and fixings.
- Further information can be obtained from the NZ Metal Roof & Wall Cladding Code of Practice: www.metalroofing.org.nz or E2/AS1.

Roofing Industries
roof.co.nz

EUROSTYLE SPANLOK™ ROOFING
BARGE DETAIL (TYPE 2)

Detail Number: RI-ES45R001B-1

Date drawn: 02/02/2018

Scale: 1 : 5@ A4

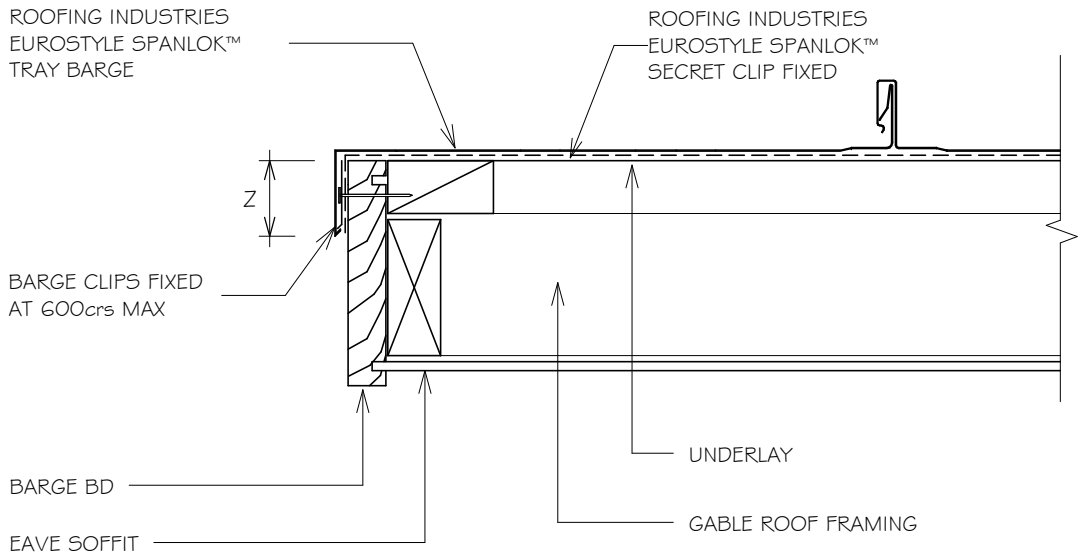

SITE WIND ZONE (As per NZS3604)		MINIMUM Z (5)
SITUATION 1	(1)	50mm (4)
SITUATION 2	(2)	75mm (4)
SITUATION 3	(3)	90mm (4)

NOTES:

1. SITUATION 1: IN LOW, MEDIUM OR HIGH WIND ZONES, WHERE ROOF PITCH IS 10° OR GREATER.
2. SITUATION 2: FOR ALL ROOF PITCHES IN VERY HIGH WIND ZONES, FOR ALL LESSER WIND ZONES WHERE ROOF PITCH IS LESS THAN 10°.
3. SITUATION 3: FOR ALL ROOF PITCHES IN EXTRA HIGH ZONES.
4. EXCLUDING DRIP EDGE.
5. INCREASE DISTANCE 'Z' BY 25mm WHEN AGAINST A PROFILED SURFACE OR TO 100mm WHICHEVER IS THE LESSER.
6. HIGH TO EXTRA HIGH WIND ZONE DOUBLE FIX UNDERFLASHINGS
7. ALLOW FOR SEPARATION FROM ANY CORROSIVE TIMBER TREATMENTS.
8. ALL DIMENSIONS SHOWN ON DRAWINGS ARE NOMINAL +/- 5mm

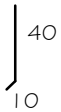

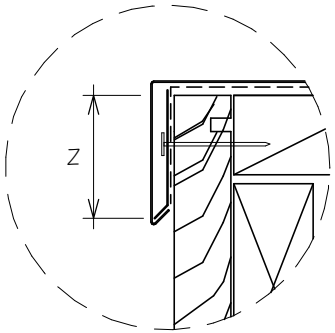

NOTES:

- These details are generally in compliance the NZ Metal Roof & Wall Cladding Code of Practice and in some cases specific details by 'Roofing Industries'. Eurostyle falls outsider the criteria of E2/AS1 and this document is therefore not applicable.
- The building designer is ultimatley responsible to ensure that details used meet the requirements of the NZ Building Code for the specific project.
- Details of the supporting structure including cavity battens are indicative only and are the responsibility of the building designer. For steel framed buildings thermal break cavity battens may be required.
- Underlay selection and building wrap types are the responsibility of the designer, Netting or other support is generally required at roof pitches less than 10 degrees combined with a self supporting paper. At roof pitches of 10° and above where non self supporting paper is used or purlin spacing is in excess of self supporting criteria, netting or other support should be used. Alternative support to netting should be used in severe coastal environments including when aluminium is used. (Refer to NZS 2295)
- These details are for Roofing Industries profile/s as nominated and may not be applicable to other profiles.
- This drawing is the copyright of 'Roofing Industries' and can only be copied or reproduced with their permission.
- These details to be read with Roofing Industries profile technical summary regarding wind loads and fixings.
- Further information can be obtained from the NZ Metal Roof & Wall Cladding Code of Practice: www.metalroofing.org.nz or E2/AS1.

Roofing Industries
roof.co.nz

EUROSTYLE SPANLOK™ ROOFING
BARGE DETAIL (TYPE 2)

Detail Number: RI-ES45R001BS-1

Date drawn: 02/02/2018

Scale: 1 : 5@ A4

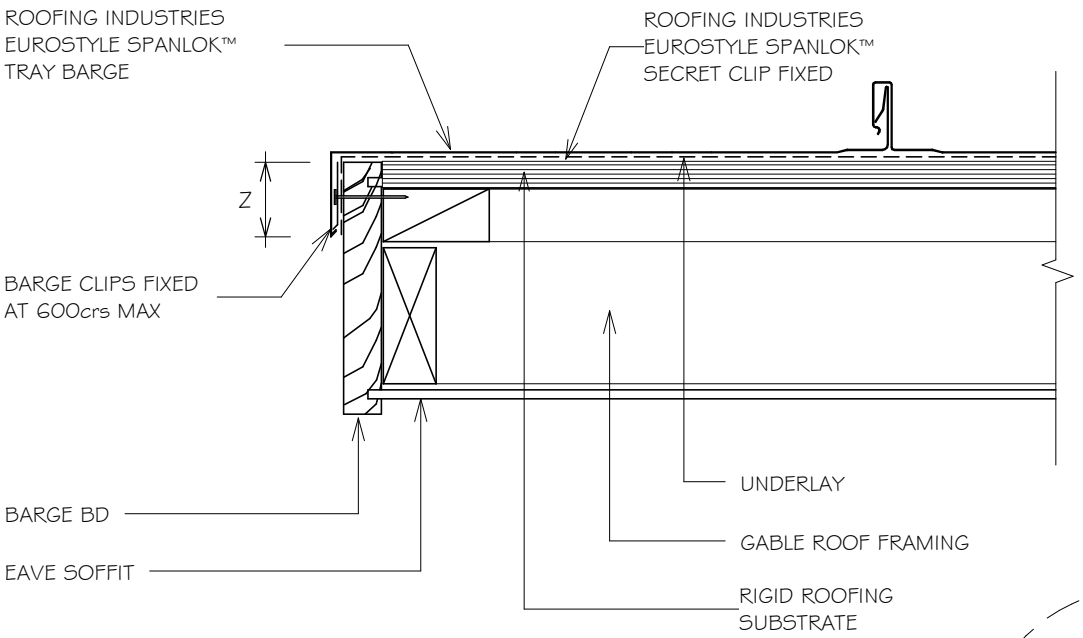

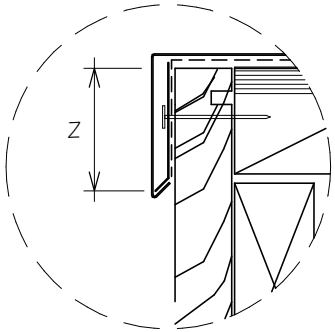

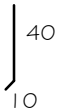

SITE WIND ZONE (As per NZS3604)		MINIMUM Z (5)	
SITUATION 1	(1)	50mm	(4)
SITUATION 2	(2)	75mm	(4)
SITUATION 3	(3)	90mm	(4)

NOTES:

1. SITUATION 1: IN LOW, MEDIUM OR HIGH WIND ZONES, WHERE ROOF PITCH IS 10° OR GREATER.
2. SITUATION 2: FOR ALL ROOF PITCHES IN VERY HIGH WIND ZONES, FOR ALL LESSER WIND ZONES WHERE ROOF PITCH IS LESS THAN 10°.
3. SITUATION 3: FOR ALL ROOF PITCHES IN EXTRA HIGH ZONES.
4. EXCLUDING DRIP EDGE.
5. INCREASE DISTANCE 'Z' BY 25mm WHEN AGAINST A PROFILED SURFACE OR TO 100mm WHICHEVER IS THE LESSER.
6. HIGH TO EXTRA HIGH WIND ZONE DOUBLE FIX UNDERFLASHINGS
7. ALLOW FOR SEPARATION FROM ANY CORROSIVE TIMBER TREATMENTS.
8. ALL DIMENSIONS SHOWN ON DRAWINGS ARE NOMINAL +/- 5mm

NOTES:

- These details are generally in compliance the NZ Metal Roof & Wall Cladding Code of Practice and in some cases specific details by 'Roofing Industries'. Eurostyle falls outsider the criteria of E2/AS1 and this document is therefore not applicable.
- The building designer is ultimatley responsible to ensure that details used meet the requirements of the NZ Building Code for the specific project.
- Details of the supporting structure including cavity battens are indicative only and are the responsibility of the building designer. For steel framed buildings thermal break cavity battens may be required.
- Underlay selection and building wrap types are the responsibility of the designer, Netting or other support is generally required at roof pitches less than 10 degrees combined with a self supporting paper. At roof pitches of 10° and above where non self supporting paper is used or purlin spacing is in excess of self supporting criteria, netting or other support should be used. Alternative support to netting should be used in severe coastal environments including when aluminium is used. (Refer to NZS 2295)
- These details are for Roofing Industries profile/s as nominated and may not be applicable to other profiles.
- This drawing is the copyright of 'Roofing Industries' and can only be copied or reproduced with their permission.
- These details to be read with Roofing Industries profile technical summary regarding wind loads and fixings.
- Further information can be obtained from the NZ Metal Roof & Wall Cladding Code of Practice: www.metalroofing.org.nz or E2/AS1.

Roofing Industries
roof.co.nz

EUROSTYLE SPANLOK™ ROOFING
BARGE DETAIL (TYPE 3)

Detail Number: RI-ES45R001C-1

Date drawn: 02/02/2018

Scale: 1 : 5@ A4

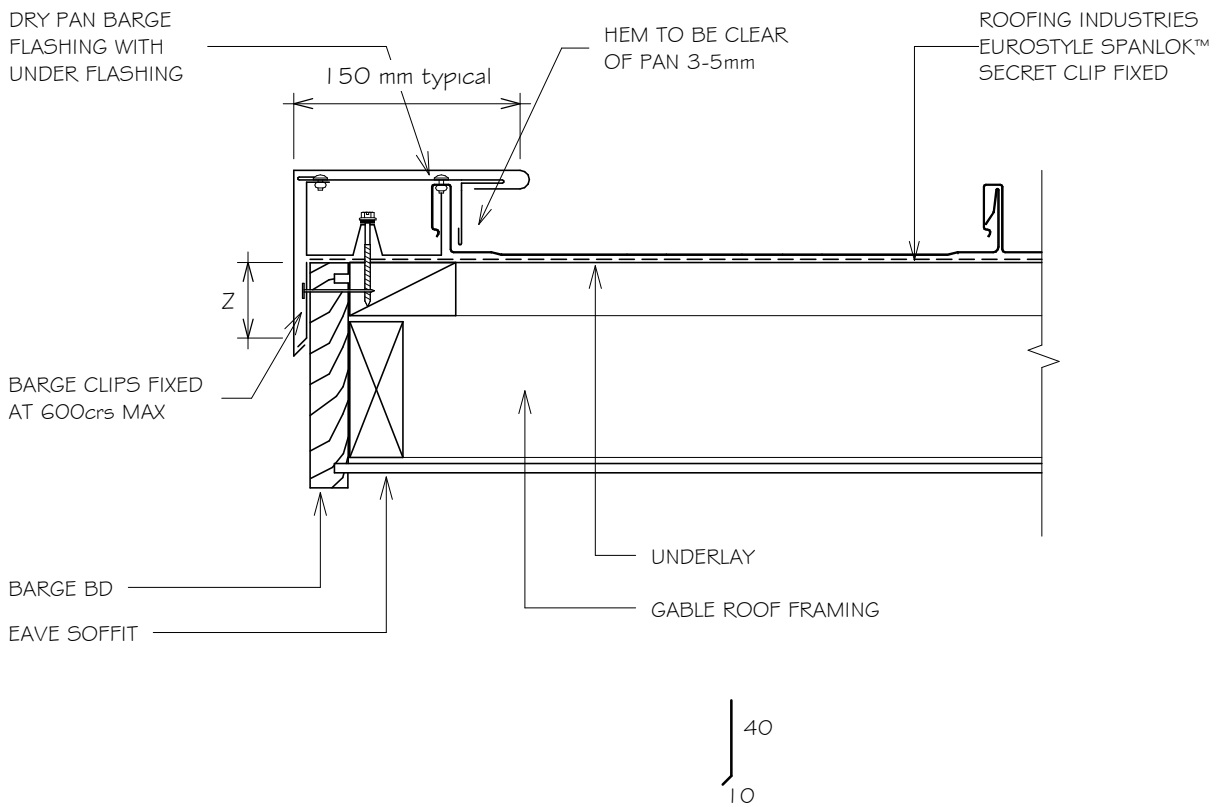

SITE WIND ZONE (As per NZS3604)	MINIMUM Z (5)
SITUATION 1 (1)	50mm (4)
SITUATION 2 (2)	75mm (4)
SITUATION 3 (3)	90mm (4)

NOTES:

1. SITUATION 1: IN LOW, MEDIUM OR HIGH WIND ZONES, WHERE ROOF PITCH IS 10° OR GREATER.
2. SITUATION 2: FOR ALL ROOF PITCHES IN VERY HIGH WIND ZONES, FOR ALL LESSER WIND ZONES WHERE ROOF PITCH IS LESS THAN 10°.
3. SITUATION 3: FOR ALL ROOF PITCHES IN EXTRA HIGH ZONES.
4. EXCLUDING DRIP EDGE.
5. INCREASE DISTANCE 'Z' BY 25mm WHEN AGAINST A PROFILED SURFACE OR TO 100mm WHICHEVER IS THE LESSER.
6. HIGH TO EXTRA HIGH WIND ZONE DOUBLE FIX UNDERFLASHINGS
7. ALLOW FOR SEPARATION FROM ANY CORROSIVE TIMBER TREATMENTS.
8. ALL DIMENSIONS SHOWN ON DRAWINGS ARE NOMINAL +/- 5mm

NOTES:

- These details are generally in compliance the NZ Metal Roof & Wall Cladding Code of Practice and in some cases specific details by 'Roofing Industries'. Eurostyle falls outsider the criteria of E2/AS1 and this document is therefore not applicable.
- The building designer is ultimatley responsible to ensure that details used meet the requirements of the NZ Building Code for the specific project.
- Details of the supporting structure including cavity battens are indicative only and are the responsibility of the building designer. For steel framed buildings thermal break cavity battens may be required.
- Underlay selection and building wrap types are the responsibility of the designer, Netting or other support is generally required at roof pitches less than 10 degrees combined with a self supporting paper. At roof pitches of 10° and above where non self supporting paper is used or purlin spacing is in excess of self supporting criteria, netting or other support should be used. Alternative support to netting should be used in severe coastal environments including when aluminium is used. (Refer to NZS 2295)
- These details are for Roofing Industries profile/s as nominated and may not be applicable to other profiles.
- This drawing is the copyright of 'Roofing Industries' and can only be copied or reproduced with their permission.
- These details to be read with Roofing Industries profile technical summary regarding wind loads and fixings.
- Further information can be obtained from the NZ Metal Roof & Wall Cladding Code of Practice: www.metalroofing.org.nz or E2/AS1.

Roofing Industries
roof.co.nz

EUROSTYLE SPANLOK™ ROOFING
BARGE DETAIL (TYPE 3)

Detail Number: RI-ES45R001CS-1

Date drawn: 02/02/2018

Scale: 1 : 5@ A4

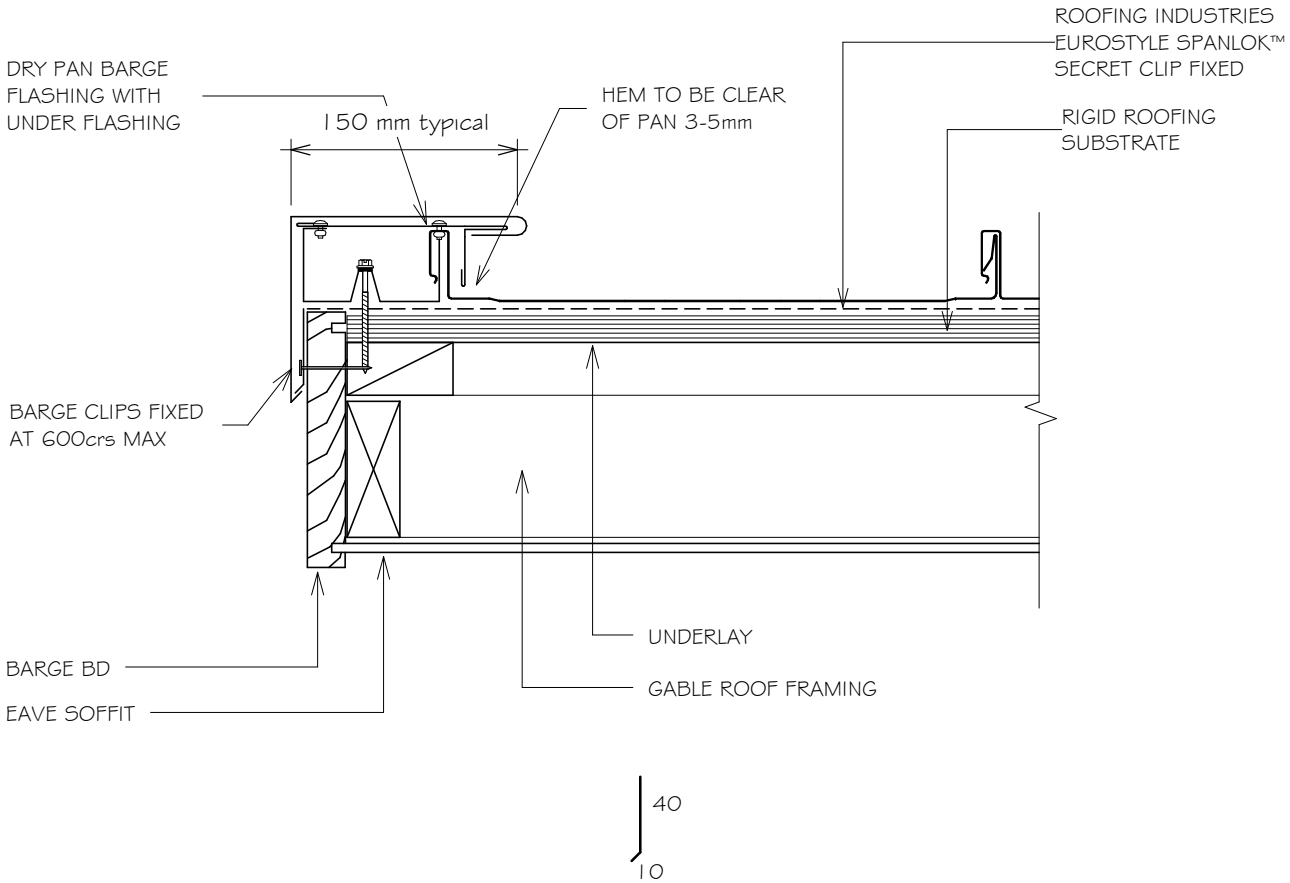

SITE WIND ZONE (As per NZS3604)		MINIMUM Z (5)
SITUATION 1	(1)	50mm (4)
SITUATION 2	(2)	75mm (4)
SITUATION 3	(3)	90mm (4)

NOTES:

1. SITUATION 1: IN LOW, MEDIUM OR HIGH WIND ZONES, WHERE ROOF PITCH IS 10° OR GREATER.
2. SITUATION 2: FOR ALL ROOF PITCHES IN VERY HIGH WIND ZONES, FOR ALL LESSER WIND ZONES WHERE ROOF PITCH IS LESS THAN 10°.
3. SITUATION 3: FOR ALL ROOF PITCHES IN EXTRA HIGH ZONES.
4. EXCLUDING DRIP EDGE.
5. INCREASE DISTANCE 'Z' BY 25mm WHEN AGAINST A PROFILED SURFACE OR TO 100mm WHICHEVER IS THE LESSER.
6. HIGH TO EXTRA HIGH WIND ZONE DOUBLE FIX UNDERFLASHINGS
7. ALLOW FOR SEPARATION FROM ANY CORROSIVE TIMBER TREATMENTS.
8. ALL DIMENSIONS SHOWN ON DRAWINGS ARE NOMINAL +/- 5mm.

NOTES:

- These details are generally in compliance the NZ Metal Roof & Wall Cladding Code of Practice and in some cases specific details by 'Roofing Industries'. Eurostyle falls outsider the criteria of E2/AS1 and this document is therefore not applicable.
- The building designer is ultimatley responsible to ensure that details used meet the requirements of the NZ Building Code for the specific project.
- Details of the supporting structure including cavity battens are indicative only and are the responsibility of the building designer. For steel framed buildings thermal break cavity battens may be required.
- Underlay selection and building wrap types are the responsibility of the designer, Netting or other support is generally required at roof pitches less than 10 degrees combined with a self supporting paper. At roof pitches of 10° and above where non self supporting paper is used or purlin spacing is in excess of self supporting criteria, netting or other support should be used. Alternative support to netting should be used in severe coastal environments including when aluminium is used. (Refer to NZS 2295)
- These details are for Roofing Industries profile/s as nominated and may not be applicable to other profiles.
- This drawing is the copyright of 'Roofing Industries' and can only be copied or reproduced with their permission.
- These details to be read with Roofing Industries profile technical summary regarding wind loads and fixings.
- Further information can be obtained from the NZ Metal Roof & Wall Cladding Code of Practice: www.metalroofing.org.nz or E2/AS1.

Roofing Industries
roof.co.nz

EUROSTYLE SPANLOK™ ROOFING
TYPICAL HEAD BARGE DETAIL

Detail Number: RI-ES45R002A
Date drawn: 02/02/2018
Scale: 1 : 5@ A4

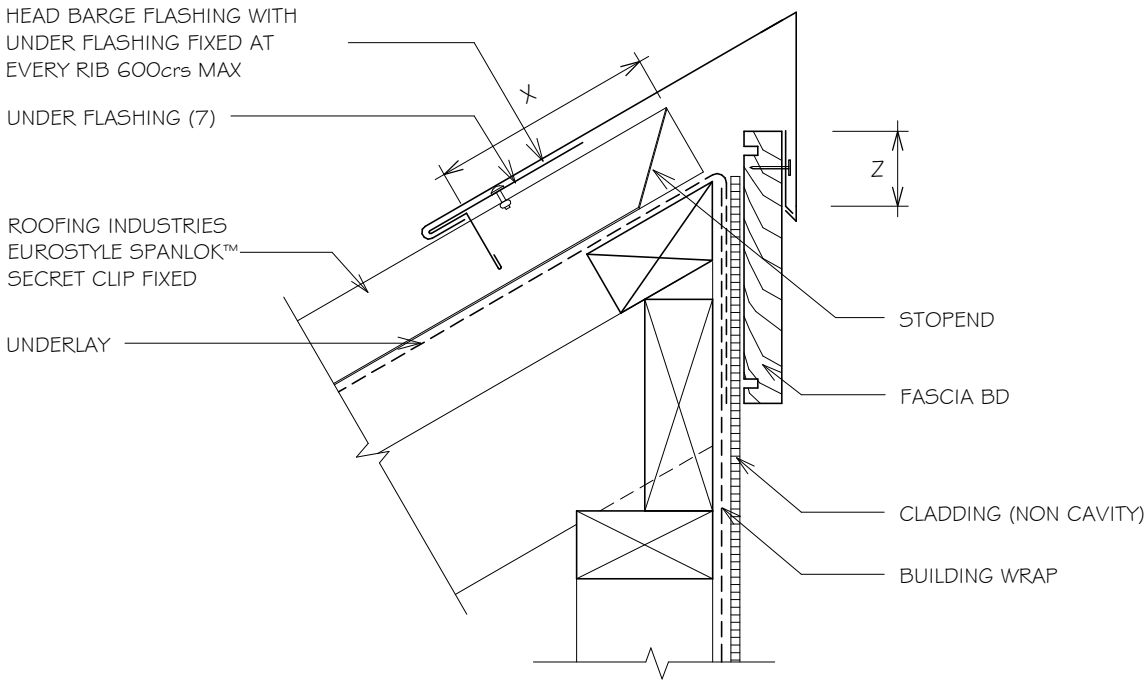

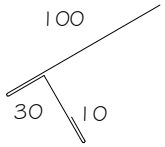

HEM TO BE CEAR OF PAN 3-5mm

SITE WIND ZONE (As per NZS3604)	MINIMUM	
	Z (5)	X
SITUATION 1 (1)	50mm (4)	150mm
SITUATION 2 (2)	75mm (4)	200mm
SITUATION 3 (3)	90mm (4)	200mm

NOTES:

1. SITUATION 1: IN LOW, MEDIUM OR HIGH WIND ZONES, WHERE ROOF PITCH IS 10° OR GREATER.
2. SITUATION 2: FOR ALL ROOF PITCHES IN VERY HIGH WIND ZONES, FOR ALL LESSER WIND ZONES WHERE ROOF PITCH IS LESS THAN 10°.
3. SITUATION 3: FOR ALL ROOF PITCHES IN EXTRA HIGH ZONES.
4. EXCLUDING DRIP EDGE.
5. INCREASE DISTANCE 'Z' BY 25mm WHEN AGAINST A PROFILED SURFACE OR TO 100mm WHICHEVER IS THE LESSER.
6. ALLOW FOR SEPARATION FROM ANY CORROSIVE TIMBER TREATMENTS.
7. HIGH TO EXTRA HIGH WIND ZONE DOUBLE FIX UNDERFLASHINGS.
8. ALL DIMENSIONS SHOWN ON DRAWINGS ARE NOMINAL +/- 5mm

NOTES:

- These details are generally in compliance the NZ Metal Roof & Wall Cladding Code of Practice and in some cases specific details by 'Roofing Industries'. Eurostyle falls outsider the criteria of E2/AS1 and this document is therefore not applicable.
- The building designer is ultimatley responsible to ensure that details used meet the requirements of the NZ Building Code for the specific project.
- Details of the supporting structure including cavity battens are indicative only and are the responsibility of the building designer. For steel framed buildings thermal break cavity battens may be required.
- Underlay selection and building wrap types are the responsibility of the designer, Netting or other support is generally required at roof pitches less than 10 degrees combined with a self supporting paper. At roof pitches of 10° and above where non self supporting paper is used or purlin spacing is in excess of self supporting criteria, netting or other support should be used. Alternative support to netting should be used in severe coastal environments including when aluminium is used. (Refer to NZS 2295)
- These details are for Roofing Industries profile/s as nominated and may not be applicable to other profiles.
- This drawing is the copyright of 'Roofing Industries' and can only be copied or reproduced with their permission.
- These details to be read with Roofing Industries profile technical summary regarding wind loads and fixings.
- Further information can be obtained from the NZ Metal Roof & Wall Cladding Code of Practice: www.metalroofing.org.nz or E2/AS1.

Roofing Industries
roof.co.nz

EUROSTYLE SPANLOK™ ROOFING
TYPICAL HEAD BARGE DETAIL

Detail Number: RI-ES45R002AS
Date drawn: 02/02/2018
Scale: 1 : 5@ A4

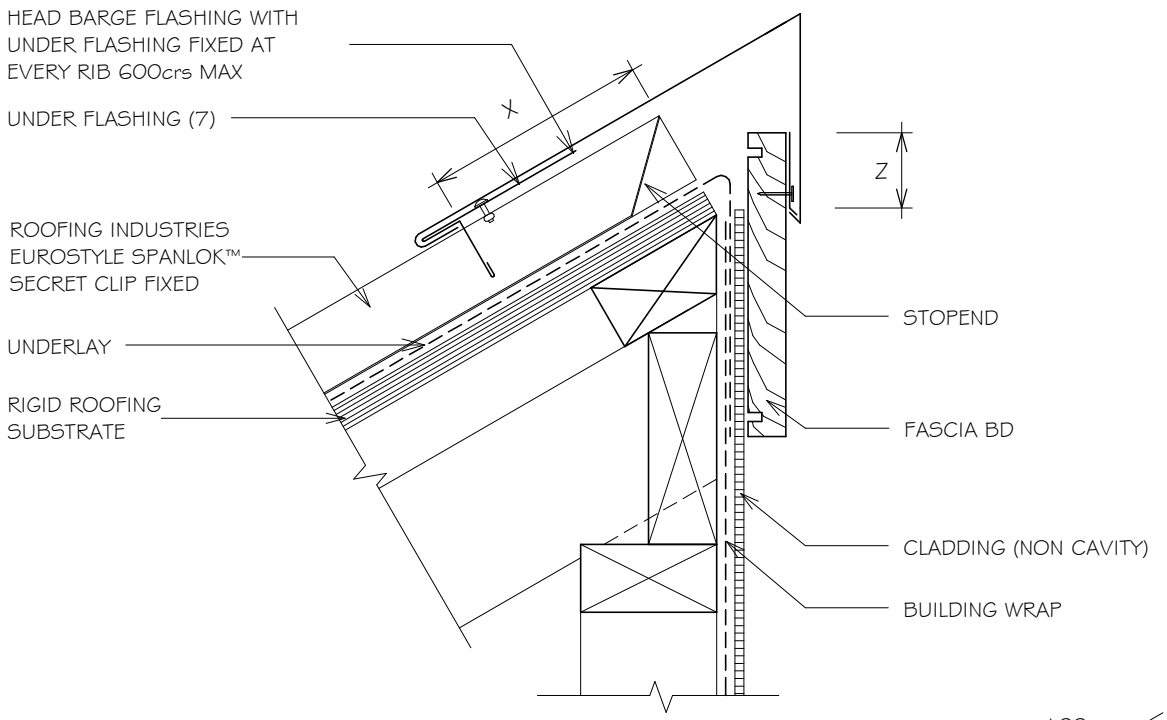

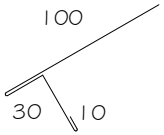

HEM TO BE CEAR OF PAN 3-5mm

SITE WIND ZONE (As per NZS3604)	MINIMUM	
	Z (5)	X
SITUATION 1 (1)	50mm (4)	150mm
SITUATION 2 (2)	75mm (4)	200mm
SITUATION 3 (3)	90mm (4)	200mm

NOTES:

1. SITUATION 1: IN LOW, MEDIUM OR HIGH WIND ZONES, WHERE ROOF PITCH IS 10° OR GREATER.
2. SITUATION 2: FOR ALL ROOF PITCHES IN VERY HIGH WIND ZONES, FOR ALL LESSER WIND ZONES WHERE ROOF PITCH IS LESS THAN 10°.
3. SITUATION 3: FOR ALL ROOF PITCHES IN EXTRA HIGH ZONES.
4. EXCLUDING DRIP EDGE.
5. INCREASE DISTANCE 'Z' BY 25mm WHEN AGAINST A PROFILED SURFACE OR TO 100mm WHICHEVER IS THE LESSER.
6. ALLOW FOR SEPARATION FROM ANY CORROSIVE TIMBER TREATMENTS.
7. HIGH TO EXTRA HIGH WIND ZONE DOUBLE FIX UNDERFLASHINGS.
8. ALL DIMENSIONS SHOWN ON DRAWINGS ARE NOMINAL +/- 5mm

NOTES:

- These details are generally in compliance the NZ Metal Roof & Wall Cladding Code of Practice and in some cases specific details by 'Roofing Industries'. Eurostyle falls outsider the criteria of E2/AS1 and this document is therefore not applicable.
- The building designer is ultimatley responsible to ensure that details used meet the requirements of the NZ Building Code for the specific project.
- Details of the supporting structure including cavity battens are indicative only and are the responsibility of the building designer. For steel framed buildings thermal break cavity battens may be required.
- Underlay selection and building wrap types are the responsibility of the designer, Netting or other support is generally required at roof pitches less than 10 degrees combined with a self supporting paper. At roof pitches of 10° and above where non self supporting paper is used or purlin spacing is in excess of self supporting criteria, netting or other support should be used. Alternative support to netting should be used in severe coastal environments including when aluminium is used. (Refer to NZS 2295)
- These details are for Roofing Industries profile/s as nominated and may not be applicable to other profiles.
- This drawing is the copyright of 'Roofing Industries' and can only be copied or reproduced with their permission.
- These details to be read with Roofing Industries profile technical summary regarding wind loads and fixings.
- Further information can be obtained from the NZ Metal Roof & Wall Cladding Code of Practice: www.metalroofing.org.nz or E2/AS1.

Roofing Industries
roof.co.nz

EUROSTYLE SPANLOK™ ROOFING
TYPICAL CHANGE IN PITCH

Detail Number: RI-ES45R003A

Date drawn: 02/02/2018

Scale: 1 : 5@ A4

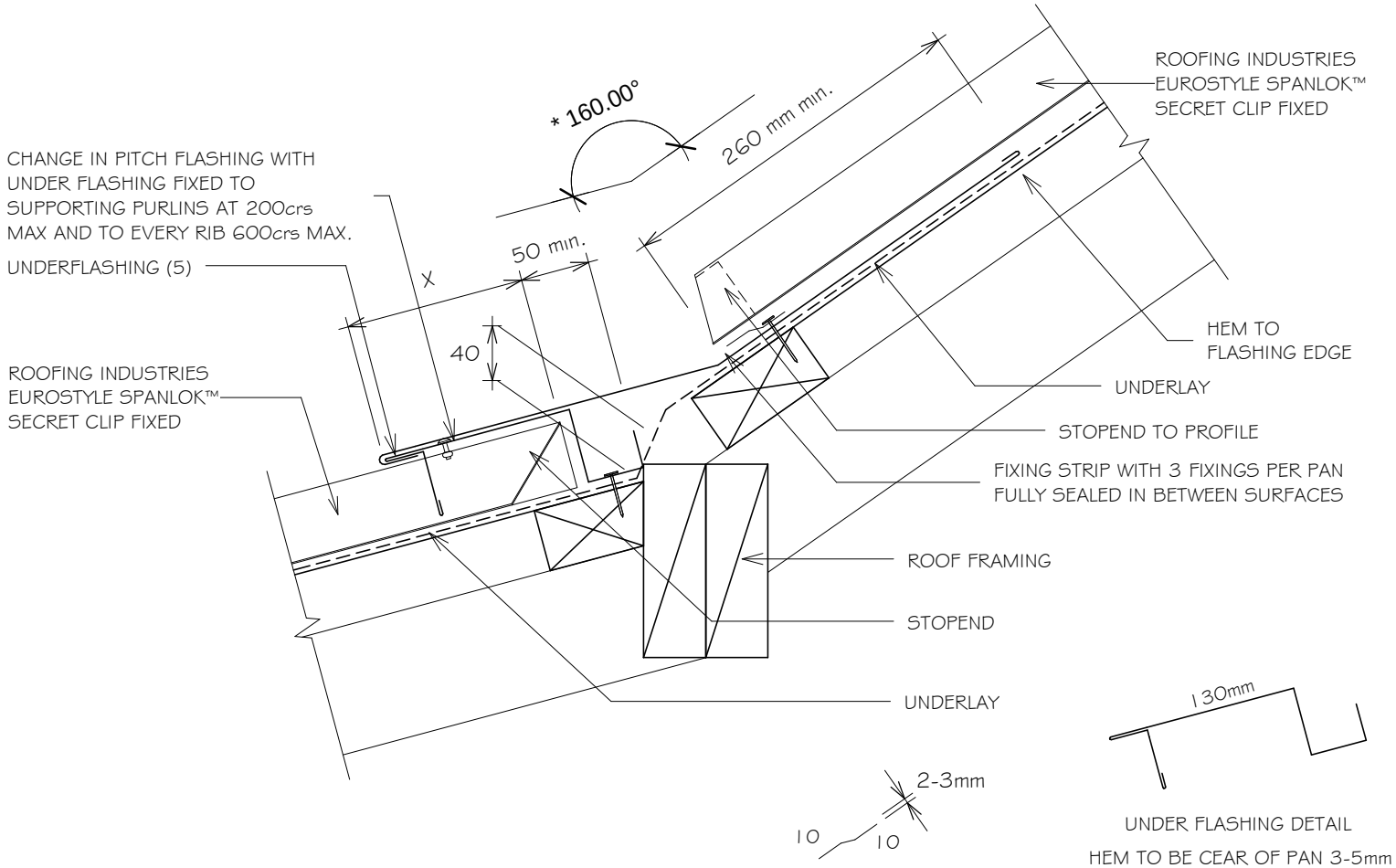

UNDER FLASHING DETAIL

HEM TO BE CEAR OF PAN 3-5mm

SITE WIND ZONE (As per NZS3604)	MINIMUM X
SITUATION 1 (1)	130mm
SITUATION 2 (2)	200mm
SITUATION 3 (3)	200mm

NOTES:

1. SITUATION 1: IN LOW, MEDIUM OR HIGH WIND ZONES, WHERE ROOF PITCH IS 10° OR GREATER.
2. SITUATION 2: FOR ALL ROOF PITCHES IN VERY HIGH WIND ZONES, FOR ALL LESSER WIND ZONES WHERE ROOF PITCH IS LESS THAN 10°.
3. SITUATION 3: REFER TO MRM CODE OF PRACTICE
4. ALLOW FOR SEPARATION FROM ANY CORROSIVE TIMBER TREATMENTS.
5. HIGH TO EXTRA HIGH WIND ZONE DOUBLE FIX UNDERFLASHINGS.
6. ALL DIMENSIONS SHOWN ON DRAWINGS ARE NOMINAL +/- 5mm

NOTES:

- These details are generally in compliance the NZ Metal Roof & Wall Cladding Code of Practice and in some cases specific details by 'Roofing Industries'. Eurostyle falls outsider the criteria of E2/AS1 and this document is therefore not applicable.
- The building designer is ultimatley responsible to ensure that details used meet the requirements of the NZ Building Code for the specific project.
- Details of the supporting structure including cavity battens are indicative only and are the responsibility of the building designer. For steel framed buildings thermal break cavity battens may be required.
- Underlay selection and building wrap types are the responsibility of the designer, Netting or other support is generally required at roof pitches less than 10 degrees combined with a self supporting paper. At roof pitches of 10° and above where non self supporting paper is used or purlin spacing is in excess of self supporting criteria, netting or other support should be used. Alternative support to netting should be used in severe coastal environments including when aluminium is used. (Refer to NZS 2295)
- These details are for Roofing Industries profile/s as nominated and may not be applicable to other profiles.
- This drawing is the copyright of 'Roofing Industries' and can only be copied or reproduced with their permission.
- These details to be read with Roofing Industries profile technical summary regarding wind loads and fixings.
- Further information can be obtained from the NZ Metal Roof & Wall Cladding Code of Practice: www.metalroofing.org.nz or E2/AS1.

Roofing Industries roof.co.nz

EUROSTYLE SPANLOK™ ROOFING
TYPICAL CHANGE IN PITCH

Detail Number: RI-ES45R003AS

Date drawn: 02/02/2018

Scale: 1 : 5@ A4

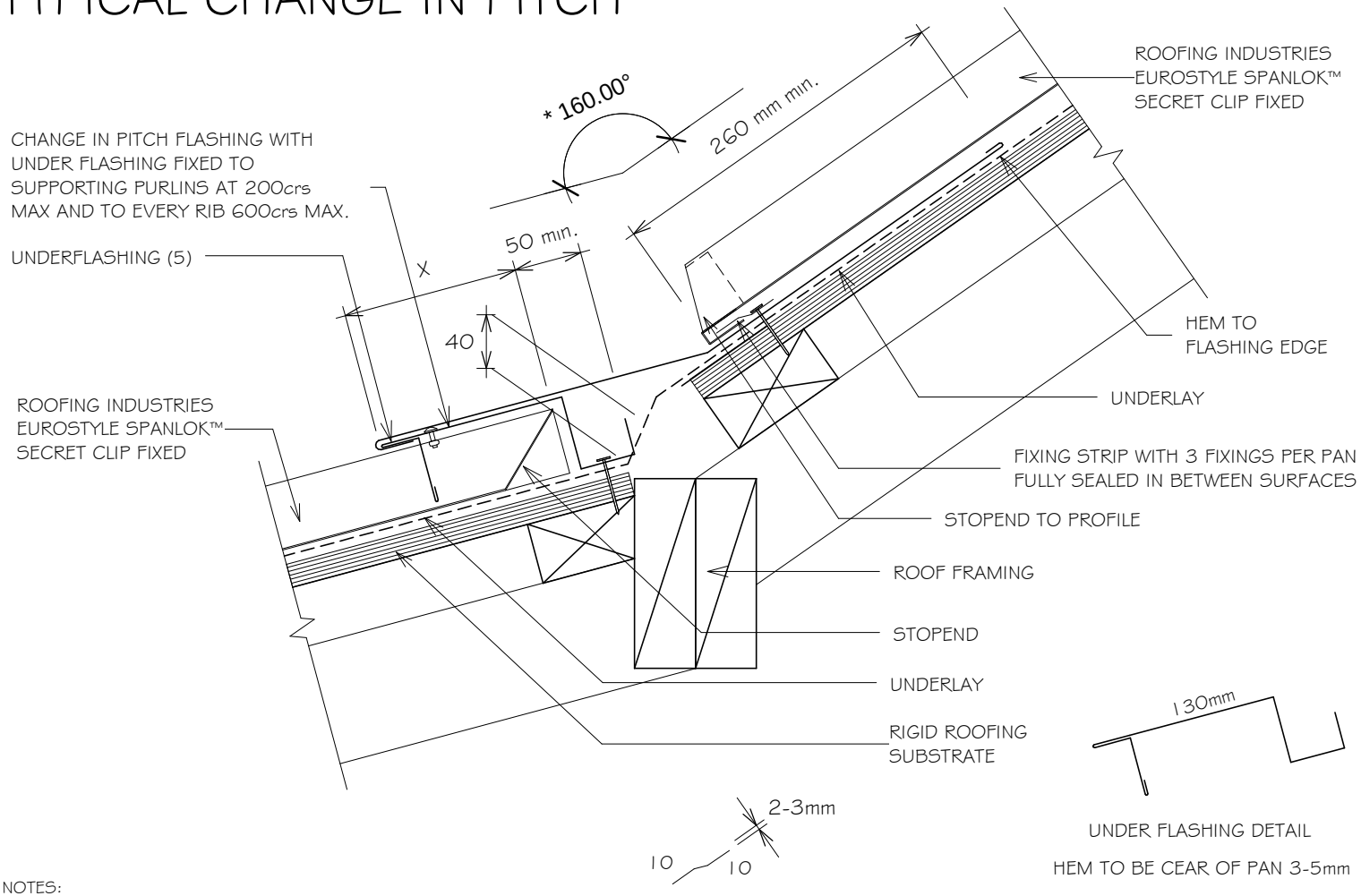

UNDER FLASHING DETAIL

HEM TO BE CEAR OF PAN 3-5mm

SITE WIND ZONE (As per NZS3604)	MINIMUM
	X
SITUATION 1 (1)	130mm
SITUATION 2 (2)	200mm
SITUATION 3 (3)	200mm

NOTES:

1. SITUATION 1: IN LOW, MEDIUM OR HIGH WIND ZONES, WHERE ROOF PITCH IS 10° OR GREATER.
2. SITUATION 2: FOR ALL ROOF PITCHES IN VERY HIGH WIND ZONES, FOR ALL LESSER WIND ZONES WHERE ROOF PITCH IS LESS THAN 10°.
3. SITUATION 3: REFER TO MRM CODE OF PRACTICE.
4. ALLOW FOR SEPARATION FROM ANY CORROSIVE TIMBER TREATMENTS.
5. HIGH TO EXTRA HIGH WIND ZONE DOUBLE FIX UNDERFLASHINGS.
6. ALL DIMENSIONS SHOWN ON DRAWINGS ARE NOMINAL +/- 5mm

NOTES:

- These details are generally in compliance the NZ Metal Roof & Wall Cladding Code of Practice and in some cases specific details by 'Roofing Industries'. Eurostyle falls outsider the criteria of E2/AS1 and this document is therefore not applicable.
- The building designer is ultimatley responsible to ensure that details used meet the requirements of the NZ Building Code for the specific project.
- Details of the supporting structure including cavity battens are indicative only and are the responsibility of the building designer. For steel framed buildings thermal break cavity battens may be required.
- Underlay selection and building wrap types are the responsibility of the designer, Netting or other support is generally required at roof pitches less than 10 degrees combined with a self supporting paper. At roof pitches of 10° and above where non self supporting paper is used or purlin spacing is in excess of self supporting criteria, netting or other support should be used. Alternative support to netting should be used in severe coastal environments including when aluminium is used. (Refer to NZS 2295)
- These details are for Roofing Industries profile/s as nominated and may not be applicable to other profiles.
- This drawing is the copyright of 'Roofing Industries' and can only be copied or reproduced with their permission.
- These details to be read with Roofing Industries profile technical summary regarding wind loads and fixings.
- Further information can be obtained from the NZ Metal Roof & Wall Cladding Code of Practice: www.metalroofing.org.nz or E2/AS1.

Roofing Industries
roof.co.nz

EUROSTYLE SPANLOK™ ROOFING
TYPICAL CHANGE IN PITCH

Detail Number: RI-ES45R003B

Date drawn: 02/02/2018

Scale: 1 : 5@ A4

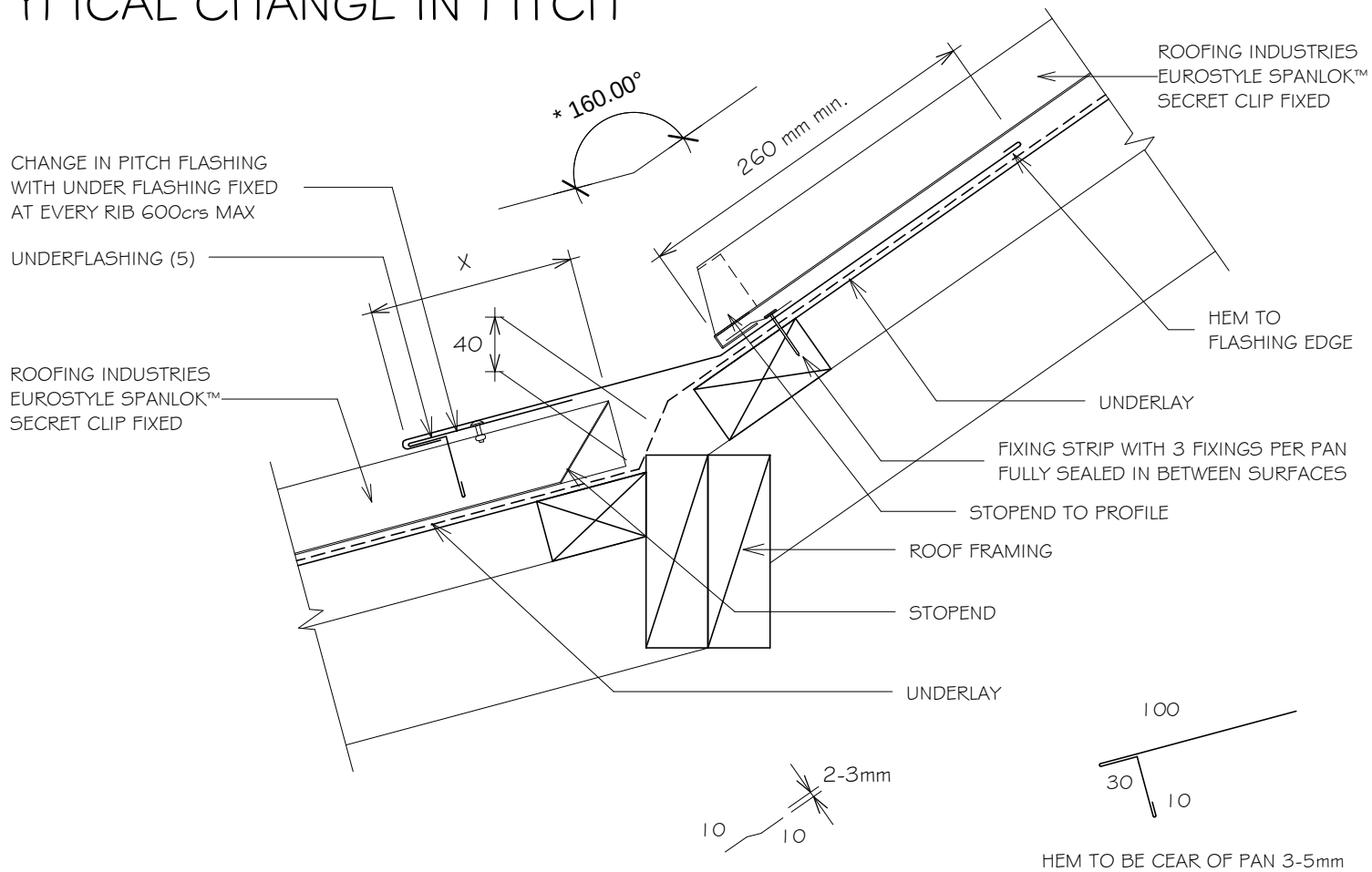

SITE WIND ZONE (As per NZS3604)	MINIMUM
	X
SITUATION 1 (1)	130mm
SITUATION 2 (2)	200mm
SITUATION 3 (3)	200mm

NOTES:

1. SITUATION 1: IN LOW, MEDIUM OR HIGH WIND ZONES, WHERE ROOF PITCH IS 10° OR GREATER.
2. SITUATION 2: FOR ALL ROOF PITCHES IN VERY HIGH WIND ZONES, FOR ALL LESSER WIND ZONES WHERE ROOF PITCH IS LESS THAN 10°.
3. SITUATION 3: REFER TO MRM CODE OF PRACTICE.
4. ALLOW FOR SEPARATION FROM ANY CORROSIVE TIMBER TREATMENTS.
5. HIGH TO EXTRA HIGH WIND ZONE DOUBLE FIX UNDERFLASHINGS.
6. ALL DIMENSIONS SHOWN ON DRAWINGS ARE NOMINAL +/- 5mm

NOTES:

- These details are generally in compliance the NZ Metal Roof & Wall Cladding Code of Practice and in some cases specific details by 'Roofing Industries'. Eurostyle falls outsider the criteria of E2/AS1 and this document is therefore not applicable.
- The building designer is ultimatley responsible to ensure that details used meet the requirements of the NZ Building Code for the specific project.
- Details of the supporting structure including cavity battens are indicative only and are the responsibility of the building designer. For steel framed buildings thermal break cavity battens may be required.
- Underlay selection and building wrap types are the responsibility of the designer, Netting or other support is generally required at roof pitches less than 10 degrees combined with a self supporting paper. At roof pitches of 10° and above where non self supporting paper is used or purlin spacing is in excess of self supporting criteria, netting or other support should be used. Alternative support to netting should be used in severe coastal environments including when aluminium is used. (Refer to NZS 2295)
- These details are for Roofing Industries profile/s as nominated and may not be applicable to other profiles.
- This drawing is the copyright of 'Roofing Industries' and can only be copied or reproduced with their permission.
- These details to be read with Roofing Industries profile technical summary regarding wind loads and fixings.
- Further information can be obtained from the NZ Metal Roof & Wall Cladding Code of Practice: www.metalroofing.org.nz or E2/AS1.

Roofing Industries
roof.co.nz

EUROSTYLE SPANLOK™ ROOFING
TYPICAL CHANGE IN PITCH

Detail Number: RI-ES45R003BS

Date drawn: 02/02/2018

Scale: 1 : 5@ A4

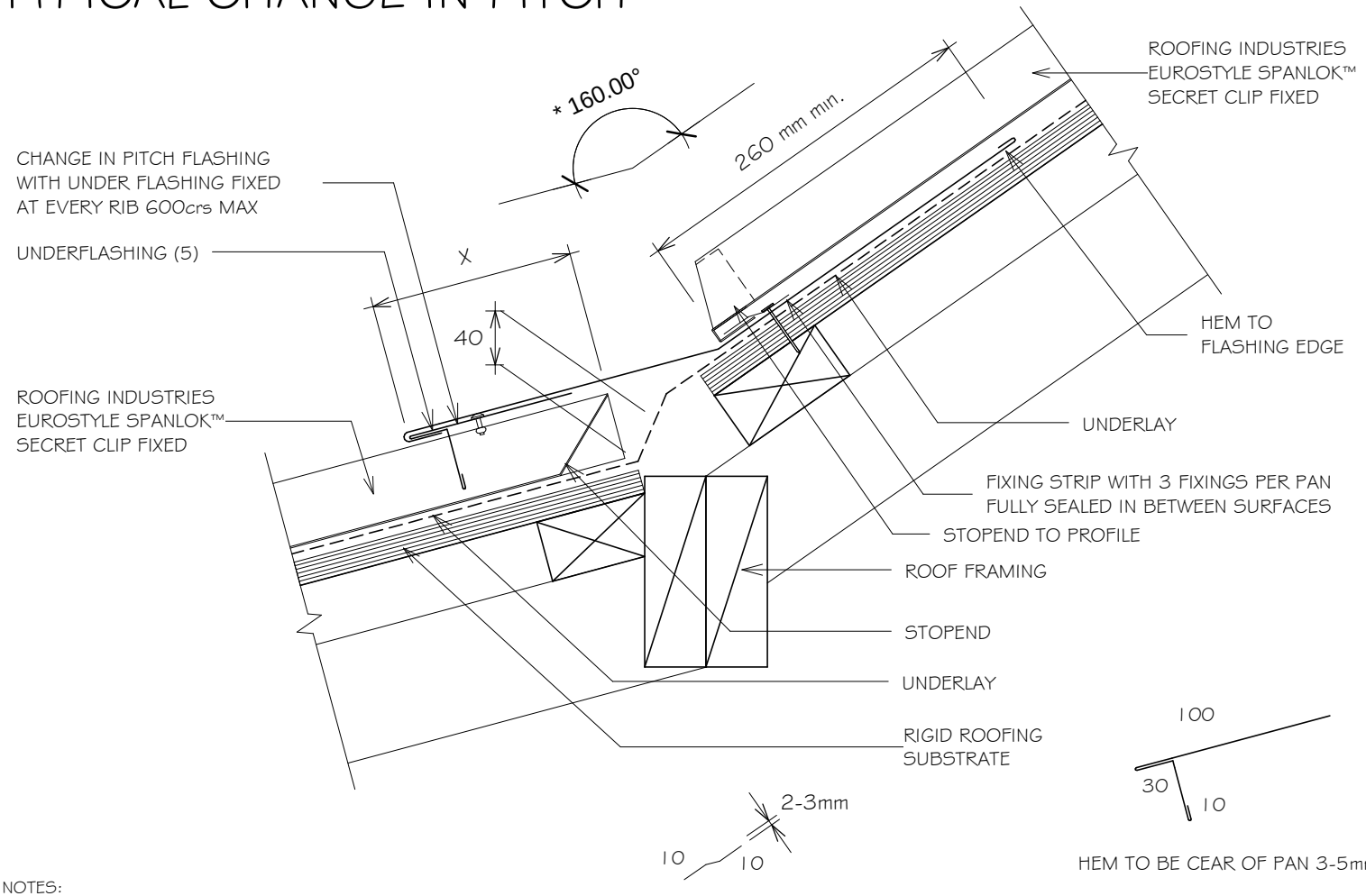

HEM TO BE CEAR OF PAN 3-5mm

SITE WIND ZONE (As per NZS3604)	MINIMUM X
SITUATION 1 (1)	130mm
SITUATION 2 (2)	200mm
SITUATION 3 (3)	200mm

NOTES:

1. SITUATION 1: IN LOW, MEDIUM OR HIGH WIND ZONES, WHERE ROOF PITCH IS 10° OR GREATER.
2. SITUATION 2: FOR ALL ROOF PITCHES IN VERY HIGH WIND ZONES, FOR ALL LESSER WIND ZONES WHERE ROOF PITCH IS LESS THAN 10°.
3. SITUATION 3: REFER TO MRM CODE OF PRACTICE.
4. ALLOW FOR SEPARATION FROM ANY CORROSIVE TIMBER TREATMENTS.
5. HIGH TO EXTRA HIGH WIND ZONE DOUBLE FIX UNDERFLASHINGS.
6. ALL DIMENSIONS SHOWN ON DRAWINGS ARE NOMINAL +/- 5mm

NOTES:

- These details are generally in compliance the NZ Metal Roof & Wall Cladding Code of Practice and in some cases specific details by 'Roofing Industries'. Eurostyle falls outsider the criteria of E2/AS1 and this document is therefore not applicable.
- The building designer is ultimatley responsible to ensure that details used meet the requirements of the NZ Building Code for the specific project.
- Details of the supporting structure including cavity battens are indicative only and are the responsibility of the building designer. For steel framed buildings thermal break cavity battens may be required.
- Underlay selection and building wrap types are the responsibility of the designer, Netting or other support is generally required at roof pitches less than 10 degrees combined with a self supporting paper. At roof pitches of 10° and above where non self supporting paper is used or purlin spacing is in excess of self supporting criteria, netting or other support should be used. Alternative support to netting should be used in severe coastal environments including when aluminium is used. (Refer to NZS 2295)
- These details are for Roofing Industries profile/s as nominated and may not be applicable to other profiles.
- This drawing is the copyright of 'Roofing Industries' and can only be copied or reproduced with their permission.
- These details to be read with Roofing Industries profile technical summary regarding wind loads and fixings.
- Further information can be obtained from the NZ Metal Roof & Wall Cladding Code of Practice: www.metalroofing.org.nz or E2/AS1.

Roofing Industries
roof.co.nz

EUROSTYLE SPANLOK™ ROOFING
GUTTER APRON DETAIL (NON VENTED)

Detail Number: RI-ES45R004A

Date drawn: 02/02/2018

Scale: 1 : 5@ A4

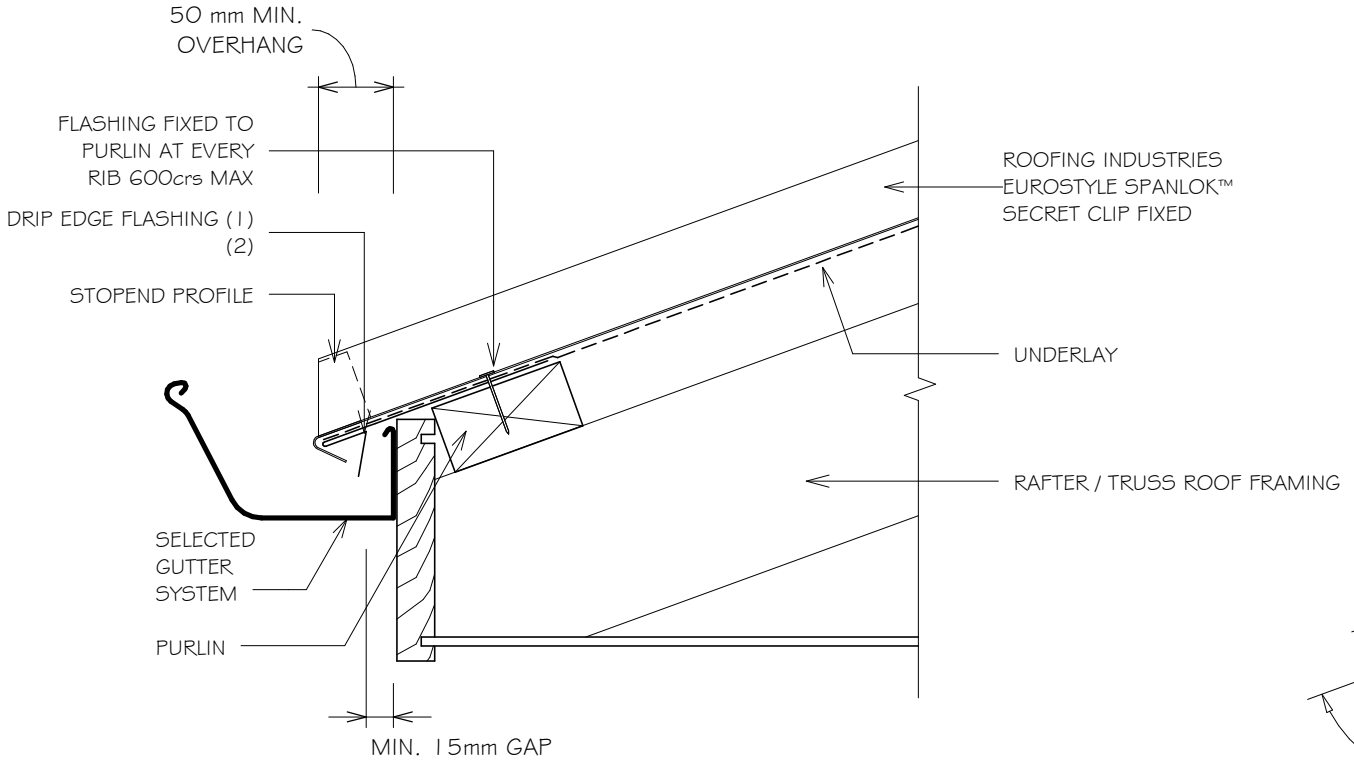

NOTES:

1. ALLOW FOR SEPARATION FROM ANY CORROSIVE TIMBER TREATMENTS.
2. HIGH TO EXTRA HIGH WIND ZONE DOUBLE FIX UNDERFLASHINGS.
3. ALL DIMENSIONS SHOWN ON DRAWINGS ARE NOMINAL +/- 5mm

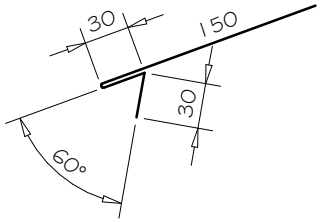

(Dimensions are indicative only)

NOTES:

- These details are generally in compliance the NZ Metal Roof & Wall Cladding Code of Practice and in some cases specific details by 'Roofing Industries'. Eurostyle falls outsider the criteria of E2/AS1 and this document is therefore not applicable.
- The building designer is ultimatley responsible to ensure that details used meet the requirements of the NZ Building Code for the specific project.
- Details of the supporting structure including cavity battens are indicative only and are the responsibility of the building designer. For steel framed buildings thermal break cavity battens may be required.
- Underlay selection and building wrap types are the responsibility of the designer, Netting or other support is generally required at roof pitches less than 10 degrees combined with a self supporting paper. At roof pitches of 10° and above where non self supporting paper is used or purlin spacing is in excess of self supporting criteria, netting or other support should be used. Alternative support to netting should be used in severe coastal environments including when aluminium is used. (Refer to NZS 2295)
- These details are for Roofing Industries profile/s as nominated and may not be applicable to other profiles.
- This drawing is the copyright of 'Roofing Industries' and can only be copied or reproduced with their permission.
- These details to be read with Roofing Industries profile technical summary regarding wind loads and fixings.
- Further information can be obtained from the NZ Metal Roof & Wall Cladding Code of Practice: www.metalroofing.org.nz or E2/AS1.

Roofing Industries
roof.co.nz

EUROSTYLE SPANLOK™ ROOFING
GUTTER APRON DETAIL (NON VENTED)

Detail Number: RI-ES45R004AS

Date drawn: 02/02/2018

Scale: 1 : 5@ A4

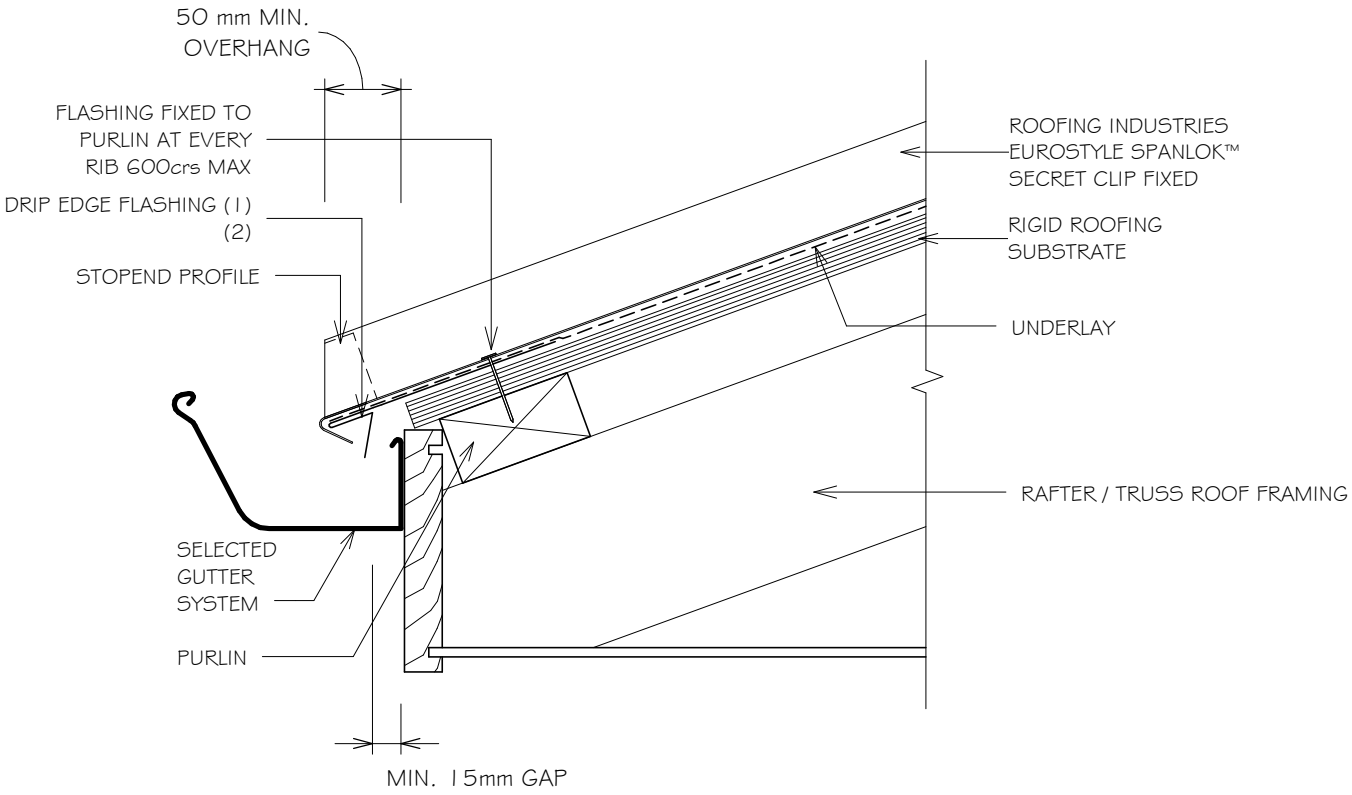

NOTES:

1. ALLOW FOR SEPARATION FROM ANY CORROSIVE TIMBER TREATMENTS.
2. HIGH TO EXTRA HIGH WIND ZONE DOUBLE FIX UNDERFLASHINGS.
3. ALL DIMENSIONS SHOWN ON DRAWINGS ARE NOMINAL +/- 5mm

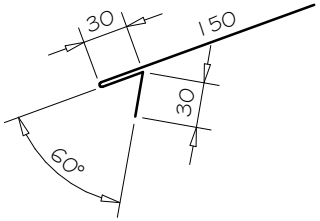

(Dimensions are indicative only)

NOTES:

- These details are generally in compliance the NZ Metal Roof & Wall Cladding Code of Practice and in some cases specific details by 'Roofing Industries'. Eurostyle falls outsider the criteria of E2/AS1 and this document is therefore not applicable.
- The building designer is ultimatley responsible to ensure that details used meet the requirements of the NZ Building Code for the specific project.
- Details of the supporting structure including cavity battens are indicative only and are the responsibility of the building designer. For steel framed buildings thermal break cavity battens may be required.
- Underlay selection and building wrap types are the responsibility of the designer, Netting or other support is generally required at roof pitches less than 10 degrees combined with a self supporting paper. At roof pitches of 10° and above where non self supporting paper is used or purlin spacing is in excess of self supporting criteria, netting or other support should be used. Alternative support to netting should be used in severe coastal environments including when aluminium is used. (Refer to NZS 2295)
- These details are for Roofing Industries profile/s as nominated and may not be applicable to other profiles.
- This drawing is the copyright of 'Roofing Industries' and can only be copied or reproduced with their permission.
- These details to be read with Roofing Industries profile technical summary regarding wind loads and fixings.
- Further information can be obtained from the NZ Metal Roof & Wall Cladding Code of Practice: www.metalroofing.org.nz or E2/AS1.

Roofing Industries
roof.co.nz

EUROSTYLE SPANLOK™ ROOFING
GUTTER APRON DETAIL (VENTILATED)

Detail Number: RI-ES45R004B

Date drawn: 02/02/2018

Scale: 1 : 5@ A4

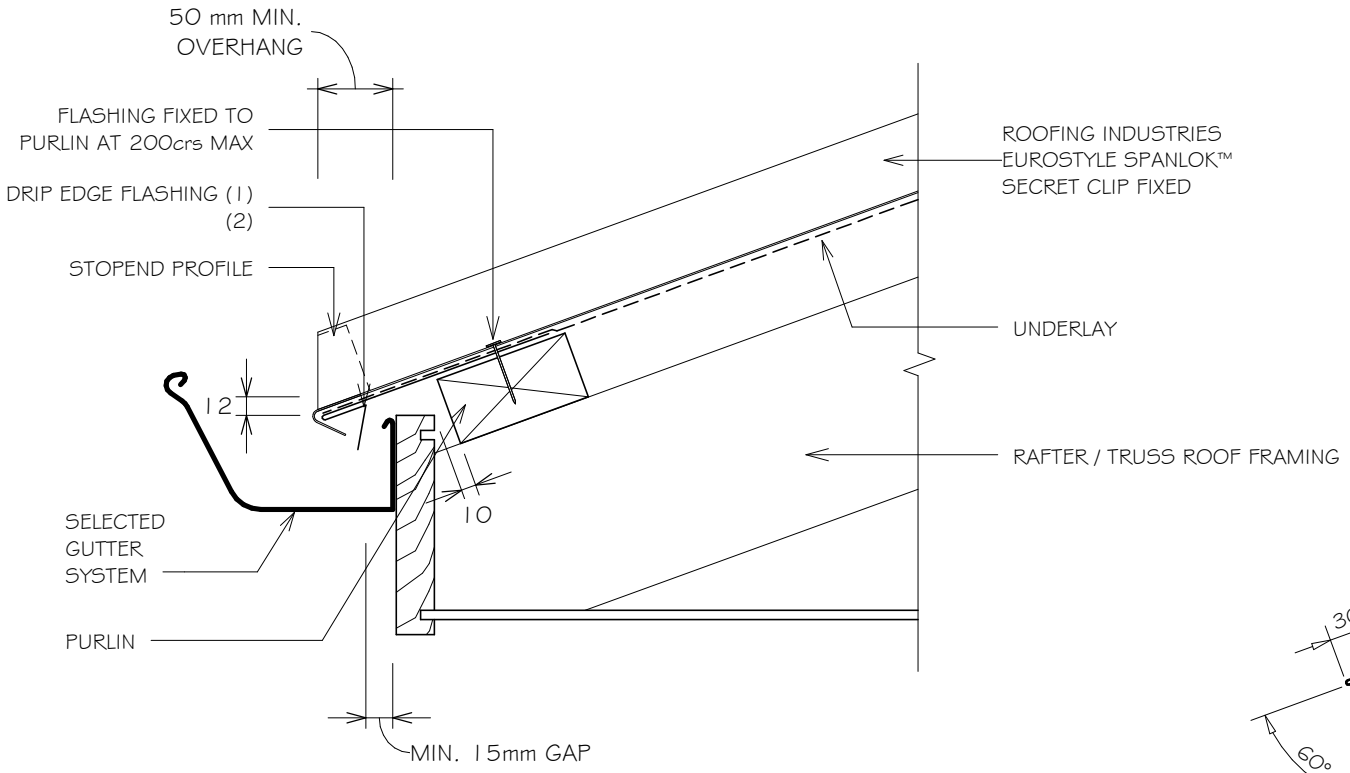

NOTES:

1. ALLOW FOR SEPARATION FROM ANY CORROSIVE TIMBER TREATMENTS.
2. HIGH TO EXTRA HIGH WIND ZONE DOUBLE FIX UNDERFLASHINGS.
3. ALL DIMENSIONS SHOWN ON DRAWINGS ARE NOMINAL +/- 5mm

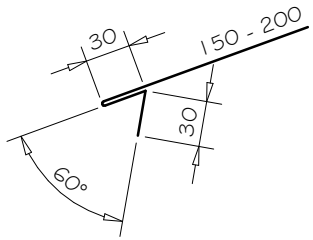

(Dimensions are indicative only)

NOTES:

- These details are generally in compliance the NZ Metal Roof & Wall Cladding Code of Practice and in some cases specific details by 'Roofing Industries'. Eurostyle falls outsider the criteria of E2/AS1 and this document is therefore not applicable.
- The building designer is ultimatley responsible to ensure that details used meet the requirements of the NZ Building Code for the specific project.
- Details of the supporting structure including cavity battens are indicative only and are the responsibility of the building designer. For steel framed buildings thermal break cavity battens may be required.
- Underlay selection and building wrap types are the responsibility of the designer, Netting or other support is generally required at roof pitches less than 10 degrees combined with a self supporting paper. At roof pitches of 10° and above where non self supporting paper is used or purlin spacing is in excess of self supporting criteria, netting or other support should be used. Alternative support to netting should be used in severe coastal environments including when aluminium is used. (Refer to NZS 2295)
- These details are for Roofing Industries profile/s as nominated and may not be applicable to other profiles.
- This drawing is the copyright of 'Roofing Industries' and can only be copied or reproduced with their permission.
- These details to be read with Roofing Industries profile technical summary regarding wind loads and fixings.
- Further information can be obtained from the NZ Metal Roof & Wall Cladding Code of Practice: www.metalroofing.org.nz or E2/AS1.

Roofing Industries
roof.co.nz

EUROSTYLE SPANLOK™ ROOFING
GUTTER APRON DETAIL (VENTILATED)

Detail Number: RI-ES45R004BS

Date drawn: 02/02/2018

Scale: 1 : 5@ A4

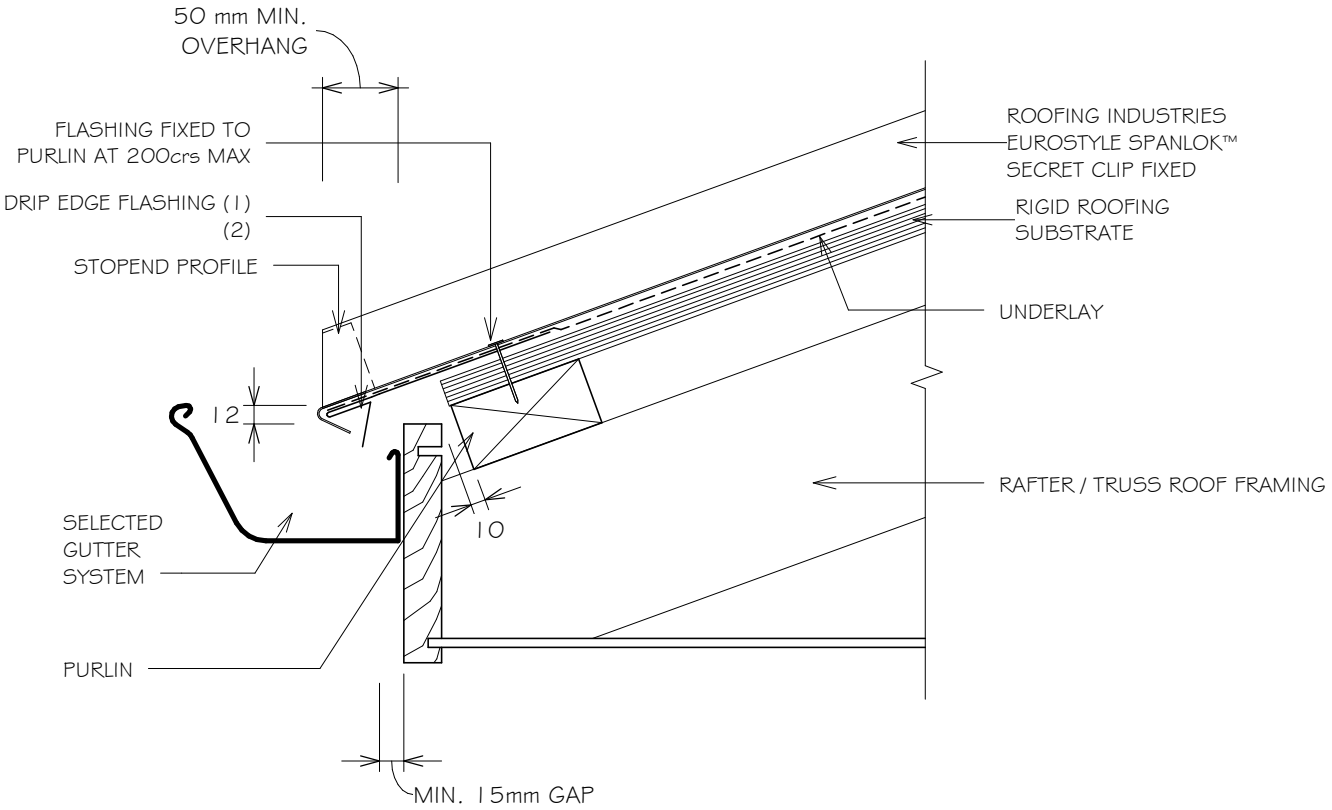

NOTES:

1. ALLOW FOR SEPARATION FROM ANY CORROSIVE TIMBER TREATMENTS.
2. HIGH TO EXTRA HIGH WIND ZONE DOUBLE FIX UNDERFLASHINGS.
3. ALL DIMENSIONS SHOWN ON DRAWINGS ARE NOMINAL +/- 5mm

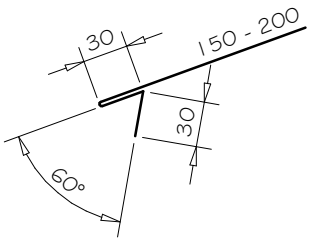

(Dimensions are indicative only)

NOTES:

- These details are generally in compliance the NZ Metal Roof & Wall Cladding Code of Practice and in some cases specific details by 'Roofing Industries'. Eurostyle falls outsider the criteria of E2/AS1 and this document is therefore not applicable.
- The building designer is ultimatley responsible to ensure that details used meet the requirements of the NZ Building Code for the specific project.
- Details of the supporting structure including cavity battens are indicative only and are the responsibility of the building designer. For steel framed buildings thermal break cavity battens may be required.
- Underlay selection and building wrap types are the responsibility of the designer, Netting or other support is generally required at roof pitches less than 10 degrees combined with a self supporting paper. At roof pitches of 10° and above where non self supporting paper is used or purlin spacing is in excess of self supporting criteria, netting or other support should be used. Alternative support to netting should be used in severe coastal environments including when aluminium is used. (Refer to NZS 2295)
- These details are for Roofing Industries profile/s as nominated and may not be applicable to other profiles.
- This drawing is the copyright of 'Roofing Industries' and can only be copied or reproduced with their permission.
- These details to be read with Roofing Industries profile technical summary regarding wind loads and fixings.
- Further information can be obtained from the NZ Metal Roof & Wall Cladding Code of Practice: www.metalroofing.org.nz or E2/AS1.

Roofing Industries
roof.co.nz

EUROSTYLE SPANLOK™ ROOFING
GUTTER APRON DETAIL (NO SOFFIT)

Detail Number: RI-ES45R004C

Date drawn: 02/02/2018

Scale: 1 : 5@ A4

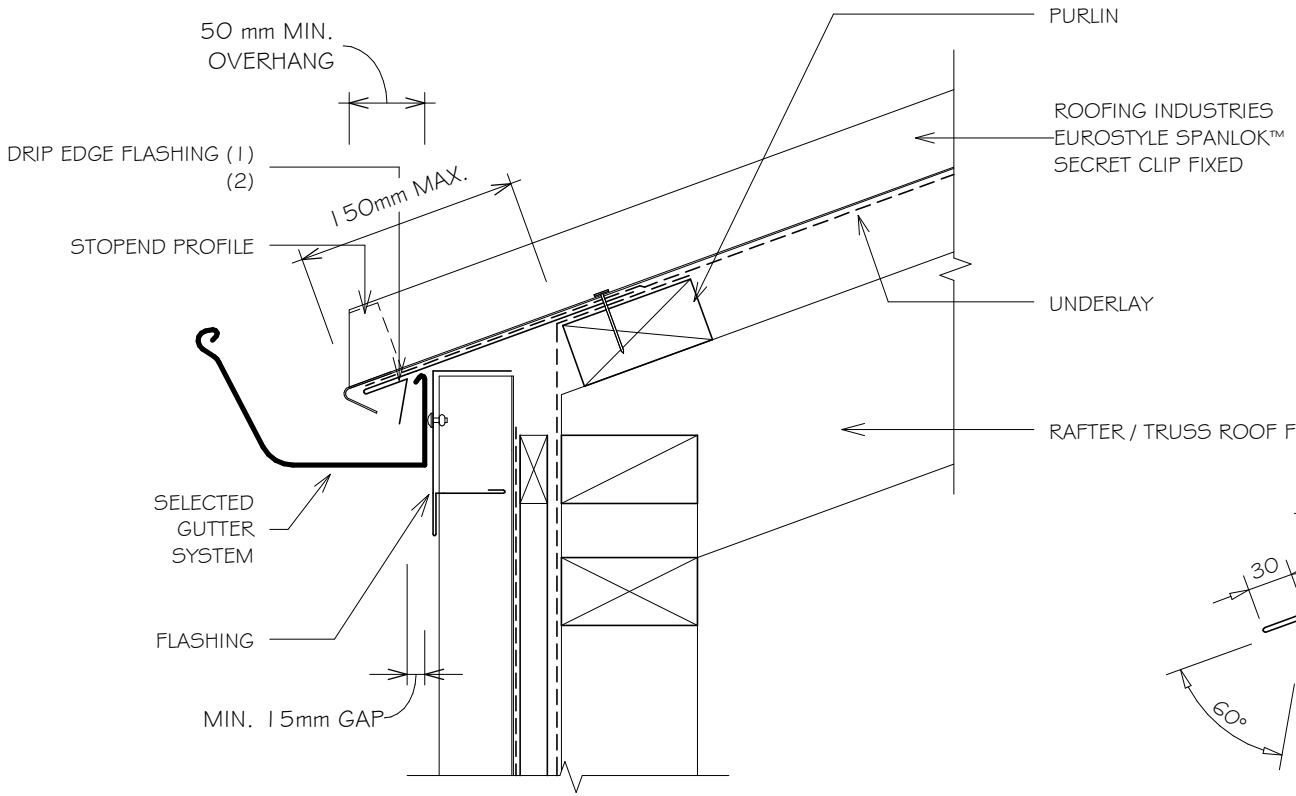

NOTES:

1. ALLOW FOR SEPARATION FROM ANY CORROSIVE TIMBER TREATMENTS.
2. HIGH TO EXTRA HIGH WIND ZONE DOUBLE FIX UNDERFLASHINGS.
3. ALL DIMENSIONS SHOWN ON DRAWINGS ARE NOMINAL +/- 5mm
4. CLADDING RIVET EVERY RIB FOR NOTCHED FLASHING SYSTEM

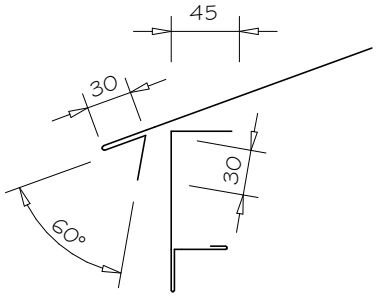

HEM TO BE CLEAR OF PAN 3-5mm

NOTES:

- These details are generally in compliance the NZ Metal Roof & Wall Cladding Code of Practice and in some cases specific details by 'Roofing Industries'. Eurostyle falls outsider the criteria of E2/AS1 and this document is therefore not applicable.
- The building designer is ultimatley responsible to ensure that details used meet the requirements of the NZ Building Code for the specific project.
- Details of the supporting structure including cavity battens are indicative only and are the responsibility of the building designer. For steel framed buildings thermal break cavity battens may be required.
- Underlay selection and building wrap types are the responsibility of the designer, Netting or other support is generally required at roof pitches less than 10 degrees combined with a self supporting paper. At roof pitches of 10° and above where non self supporting paper is used or purlin spacing is in excess of self supporting criteria, netting or other support should be used. Alternative support to netting should be used in severe coastal environments including when aluminium is used. (Refer to NZS 2295)
- These details are for Roofing Industries profile/s as nominated and may not be applicable to other profiles.
- This drawing is the copyright of 'Roofing Industries' and can only be copied or reproduced with their permission.
- These details to be read with Roofing Industries profile technical summary regarding wind loads and fixings.
- Further information can be obtained from the NZ Metal Roof & Wall Cladding Code of Practice: www.metalroofing.org.nz or E2/AS1.

Roofing Industries
roof.co.nz

EUROSTYLE SPANLOK™ ROOFING
GUTTER APRON DETAIL (NO SOFFIT)

Detail Number: RI-ES45R004CS

Date drawn: 02/02/2018

Scale: 1 : 5@ A4

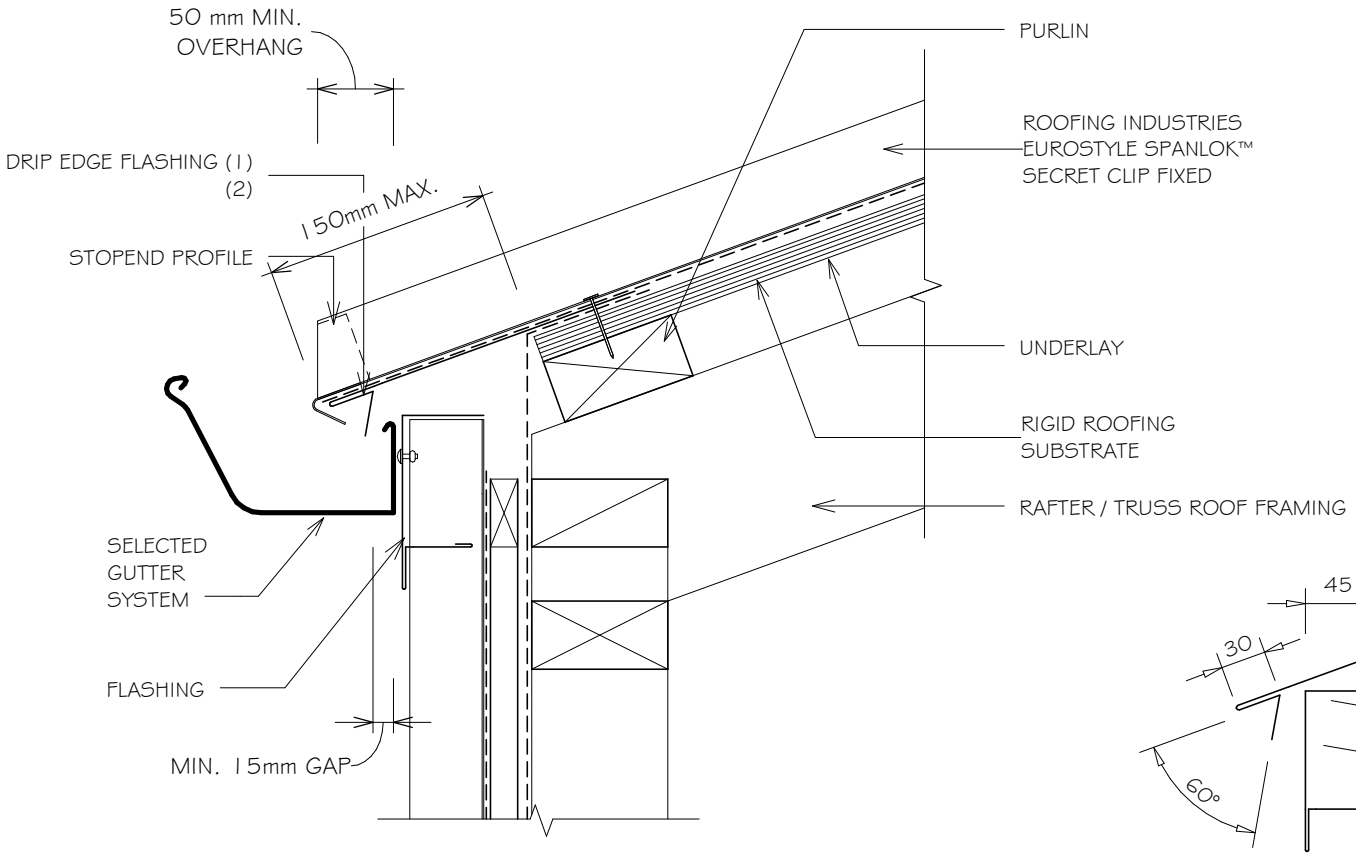

NOTES:

1. ALLOW FOR SEPARATION FROM ANY CORROSIVE TIMBER TREATMENTS.
2. HIGH TO EXTRA HIGH WIND ZONE DOUBLE FIX UNDERFLASHINGS.
3. ALL DIMENSIONS SHOWN ON DRAWINGS ARE NOMINAL +/- 5mm
4. CLADDING RIVET EVERY RIB FOR NOTCHED FLASHING SYSTEM

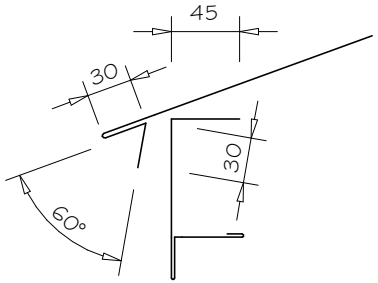

HEM TO BE CLEAR OF PAN 3-5mm

NOTES:

- These details are generally in compliance the NZ Metal Roof & Wall Cladding Code of Practice and in some cases specific details by 'Roofing Industries'. Eurostyle falls outsider the criteria of E2/AS1 and this document is therefore not applicable.
- The building designer is ultimatley responsible to ensure that details used meet the requirements of the NZ Building Code for the specific project.
- Details of the supporting structure including cavity battens are indicative only and are the responsibility of the building designer. For steel framed buildings thermal break cavity battens may be required.
- Underlay selection and building wrap types are the responsibility of the designer, Netting or other support is generally required at roof pitches less than 10 degrees combined with a self supporting paper. At roof pitches of 10° and above where non self supporting paper is used or purlin spacing is in excess of self supporting criteria, netting or other support should be used. Alternative support to netting should be used in severe coastal environments including when aluminium is used. (Refer to NZS 2295)
- These details are for Roofing Industries profile/s as nominated and may not be applicable to other profiles.
- This drawing is the copyright of 'Roofing Industries' and can only be copied or reproduced with their permission.
- These details to be read with Roofing Industries profile technical summary regarding wind loads and fixings.
- Further information can be obtained from the NZ Metal Roof & Wall Cladding Code of Practice: www.metalroofing.org.nz or E2/AS1.

Roofing Industries
roof.co.nz

EUROSTYLE SPANLOK™ ROOFING
VENTILATED RIDGE AND HIP DETAIL

Detail Number: RI-ES45R005C

Date drawn: 02/02/2018

Scale: 1 : 5@ A4

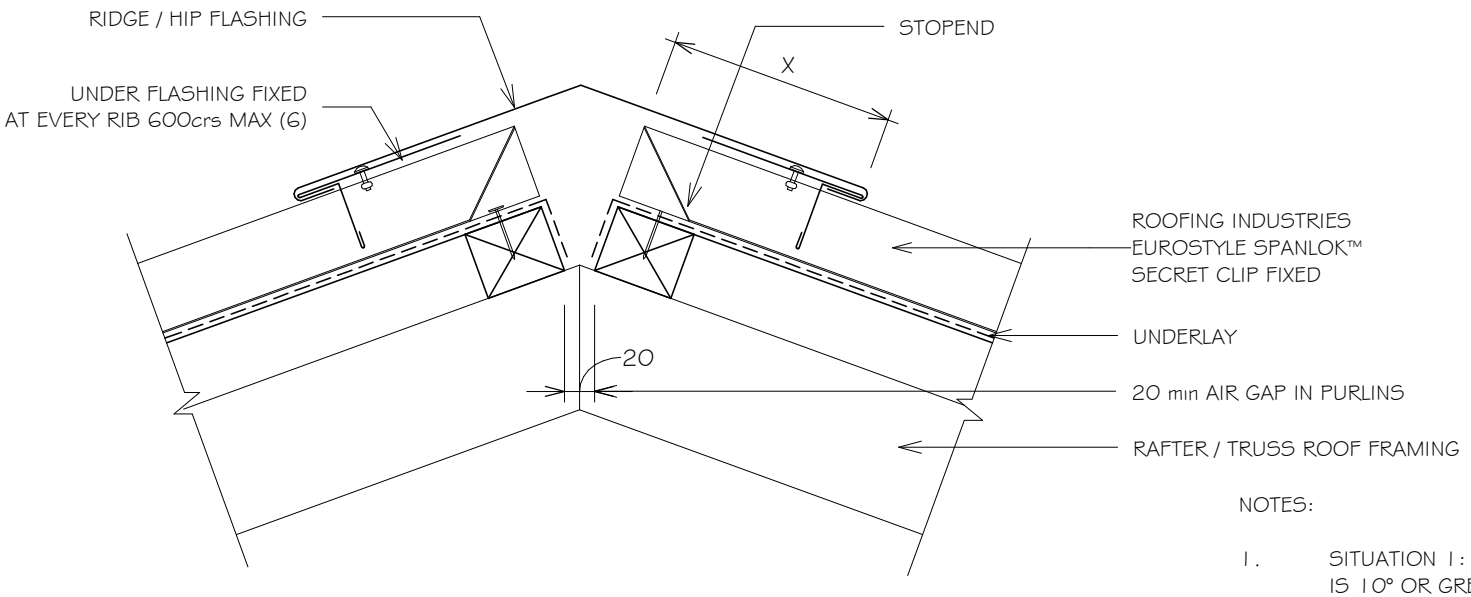

WIND ZONE	MINIMUM
	X
SITUATION 1 (1)	150mm
SITUATION 2 (2)	200mm
SITUATION 3 (3)	200mm

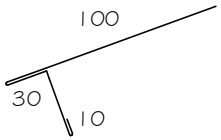

HEM TO BE CEAR OF PAN 3-5mm

NOTES:

1. SITUATION 1: IN LOW, MEDIUM OR HIGH WIND ZONES, WHERE ROOF PITCH IS 10° OR GREATER.
2. SITUATION 2: FOR ALL ROOF PITCHES IN LOW, MED, HIGH AND VERY HIGH WIND ZONES, WHERE ROOF PITCH IS LESS THAN 10°.
3. SITUATION 3: FOR ALL ROOF PITCHES IN EXTRA HIGH WIND ZONE.
4. FOR GRAVITY RIDGE VENT TO FUNCTION, ADDITIONAL VENTILATION IS REQUIRED AT THE EAVE.
5. ALLOW FOR SEPARATION FROM ANY CORROSIVE TIMBER TREATMENTS.
6. HIGH TO EXTRA HIGH WIND ZONE DOUBLE FIX UNDERFLASHINGS.
7. ALL DIMENSIONS SHOWN ON DRAWINGS ARE NOMINAL +/- 5mm
8. STOPEND 5-10mm FROM TOP OF RIB TO ACHIEVE VENTILATION IF REQUIRED

NOTES:

- These details are generally in compliance the NZ Metal Roof & Wall Cladding Code of Practice and in some cases specific details by 'Roofing Industries'. Eurostyle falls outsider the criteria of E2/AS1 and this document is therefore not applicable.
- The building designer is ultimatley responsible to ensure that details used meet the requirements of the NZ Building Code for the specific project.
- Details of the supporting structure including cavity battens are indicative only and are the responsibility of the building designer. For steel framed buildings thermal break cavity battens may be required.
- Underlay selection and building wrap types are the responsibility of the designer, Netting or other support is generally required at roof pitches less than 10 degrees combined with a self supporting paper. At roof pitches of 10° and above where non self supporting paper is used or purlin spacing is in excess of self supporting criteria, netting or other support should be used. Alternative support to netting should be used in severe coastal environments including when aluminium is used. (Refer to NZS 2295)
- These details are for Roofing Industries profile/s as nominated and may not be applicable to other profiles.
- This drawing is the copyright of 'Roofing Industries' and can only be copied or reproduced with their permission.
- These details to be read with Roofing Industries profile technical summary regarding wind loads and fixings.
- Further information can be obtained from the NZ Metal Roof & Wall Cladding Code of Practice: www.metalroofing.org.nz or E2/AS1.

Roofing Industries
roof.co.nz

EUROSTYLE SPANLOK™ ROOFING
VENTILATED RIDGE AND HIP DETAIL

Detail Number: RI-ES45R005CS

Date drawn: 02/02/2018

Scale: 1 : 5@ A4

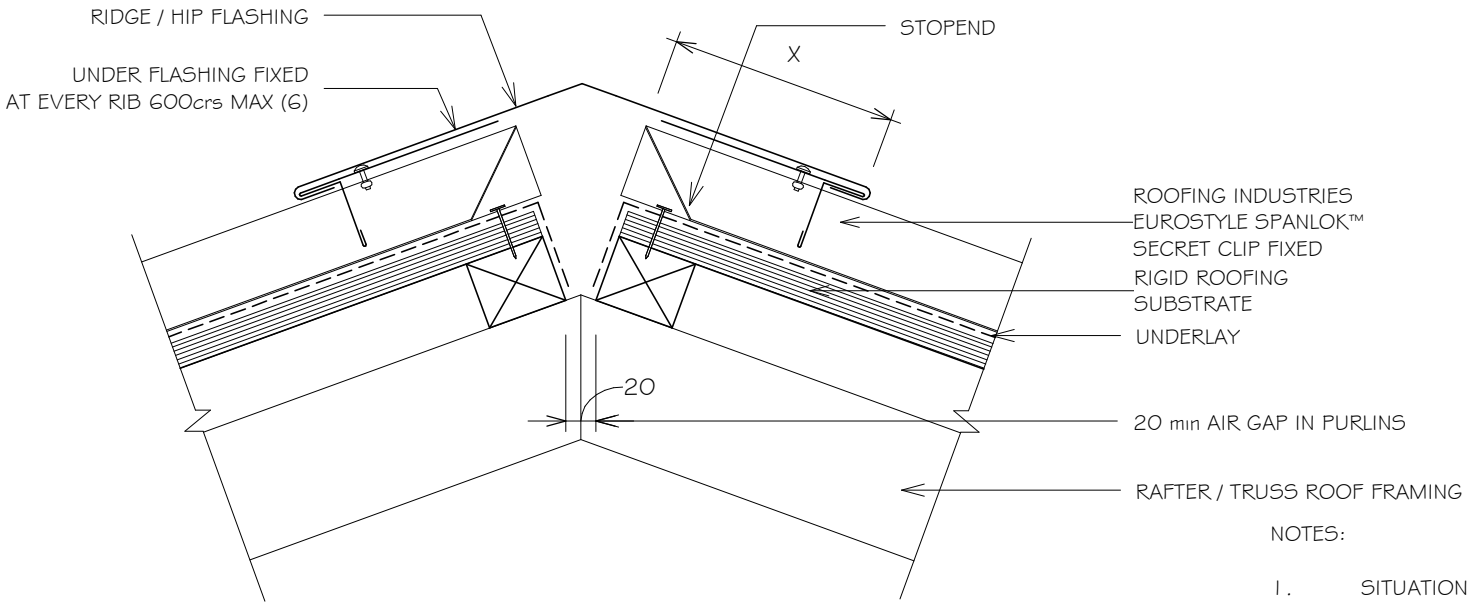

WIND ZONE	MINIMUM
	X
SITUATION 1 (1)	150mm
SITUATION 2 (2)	200mm
SITUATION 3 (3)	200mm

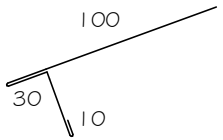

HEM TO BE CEAR OF PAN 3-5mm

NOTES:

1. SITUATION 1: IN LOW, MEDIUM OR HIGH WIND ZONES, WHERE ROOF PITCH IS 10° OR GREATER.
2. SITUATION 2: FOR ALL ROOF PITCHES IN LOW, MED, HIGH AND VERY HIGH WIND ZONES, WHERE ROOF PITCH IS LESS THAN 10°.
3. SITUATION 3: FOR ALL ROOF PITCHES IN EXTRA HIGH WIND ZONE.
4. FOR GRAVITY RIDGE VENT TO FUNCTION, ADDITIONAL VENTILATION IS REQUIRED AT THE EAVE.
5. ALLOW FOR SEPARATION FROM ANY CORROSIVE TIMBER TREATMENTS.
6. HIGH TO EXTRA HIGH WIND ZONE DOUBLE FIX.
7. ALL DIMENSIONS SHOWN ON DRAWINGS ARE NOMINAL +/- 5mm
8. STOPEND 5-10mm FROM TOP OF RIB TO ACHIEVE VENTILATION IF REQUIRED

NOTES:

- These details are generally in compliance the NZ Metal Roof & Wall Cladding Code of Practice and in some cases specific details by 'Roofing Industries'. Eurostyle falls outsider the criteria of E2/AS1 and this document is therefore not applicable.
- The building designer is ultimatley responsible to ensure that details used meet the requirements of the NZ Building Code for the specific project.
- Details of the supporting structure including cavity battens are indicative only and are the responsibility of the building designer. For steel framed buildings thermal break cavity battens may be required.
- Underlay selection and building wrap types are the responsibility of the designer, Netting or other support is generally required at roof pitches less than 10 degrees combined with a self supporting paper. At roof pitches of 10° and above where non self supporting paper is used or purlin spacing is in excess of self supporting criteria, netting or other support should be used. Alternative support to netting should be used in severe coastal environments including when aluminium is used. (Refer to NZS 2295)
- These details are for Roofing Industries profile/s as nominated and may not be applicable to other profiles.
- This drawing is the copyright of 'Roofing Industries' and can only be copied or reproduced with their permission.
- These details to be read with Roofing Industries profile technical summary regarding wind loads and fixings.
- Further information can be obtained from the NZ Metal Roof & Wall Cladding Code of Practice: www.metalroofing.org.nz or E2/AS1.

Roofing Industries
roof.co.nz

EUROSTYLE SPANLOK™ ROOFING
TYPICAL VALLEY DETAIL

Detail Number: RI-ES45R006B

Date drawn: 02/02/2018

Scale: 1 : 5@ A4

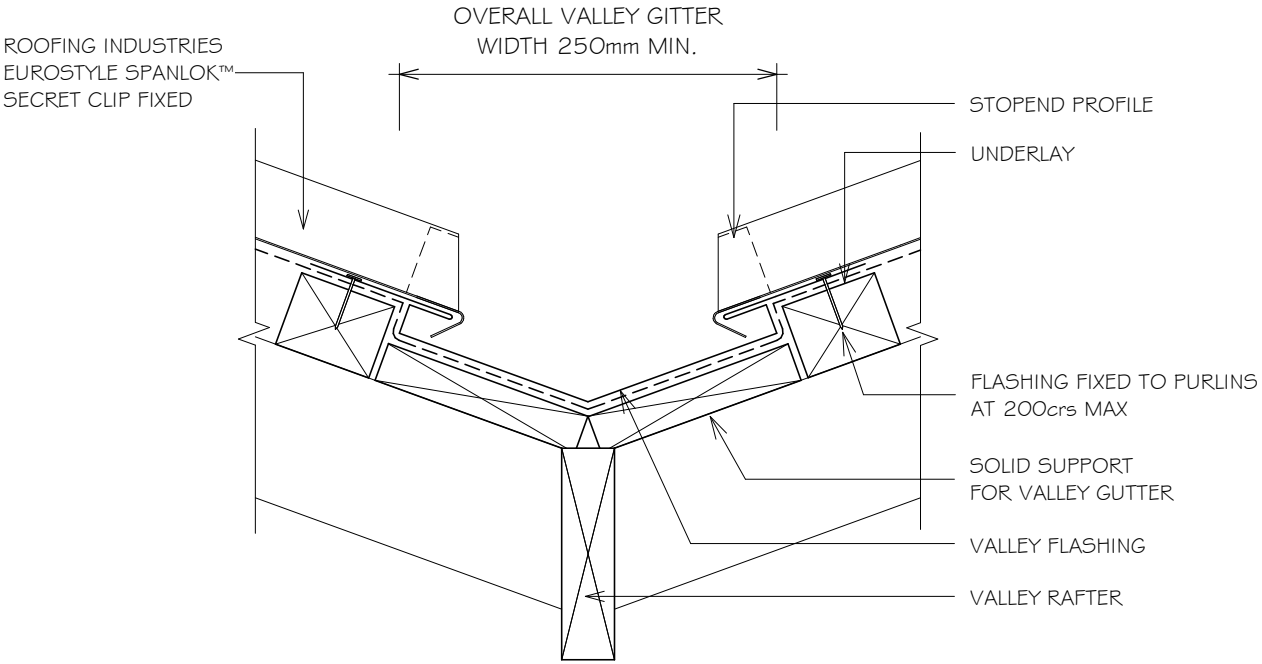

NOTES:

1. ALLOW FOR SEPARATION FROM ANY CORROSIVE TIMBER TREATMENTS.
2. ALL DIMENSIONS SHOWN ON DRAWINGS ARE NOMINAL +/- 5mm
3. HIGH TO EXTRA HIGH WIND ZONE DOUBLE FIX UNDERFLASHINGS

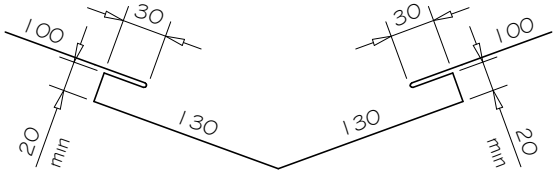

(Dimensions are indicative only)

NOTES:

- These details are generally in compliance the NZ Metal Roof & Wall Cladding Code of Practice and in some cases specific details by 'Roofing Industries'. Eurostyle falls outsider the criteria of E2/AS1 and this document is therefore not applicable.
- The building designer is ultimatley responsible to ensure that details used meet the requirements of the NZ Building Code for the specific project.
- Details of the supporting structure including cavity battens are indicative only and are the responsibility of the building designer. For steel framed buildings thermal break cavity battens may be required.
- Underlay selection and building wrap types are the responsibility of the designer, Netting or other support is generally required at roof pitches less than 10 degrees combined with a self supporting paper. At roof pitches of 10° and above where non self supporting paper is used or purlin spacing is in excess of self supporting criteria, netting or other support should be used. Alternative support to netting should be used in severe coastal environments including when aluminium is used. (Refer to NZS 2295)
- These details are for Roofing Industries profile/s as nominated and may not be applicable to other profiles.
- This drawing is the copyright of 'Roofing Industries' and can only be copied or reproduced with their permission.
- These details to be read with Roofing Industries profile technical summary regarding wind loads and fixings.
- Further information can be obtained from the NZ Metal Roof & Wall Cladding Code of Practice: www.metalroofing.org.nz or E2/AS1.

Roofing Industries
roof.co.nz

EUROSTYLE SPANLOK™ ROOFING
TYPICAL VALLEY DETAIL

Detail Number: RI-ES45R006B-1

Date drawn: 02/02/2018

Scale: 1 : 5@ A4

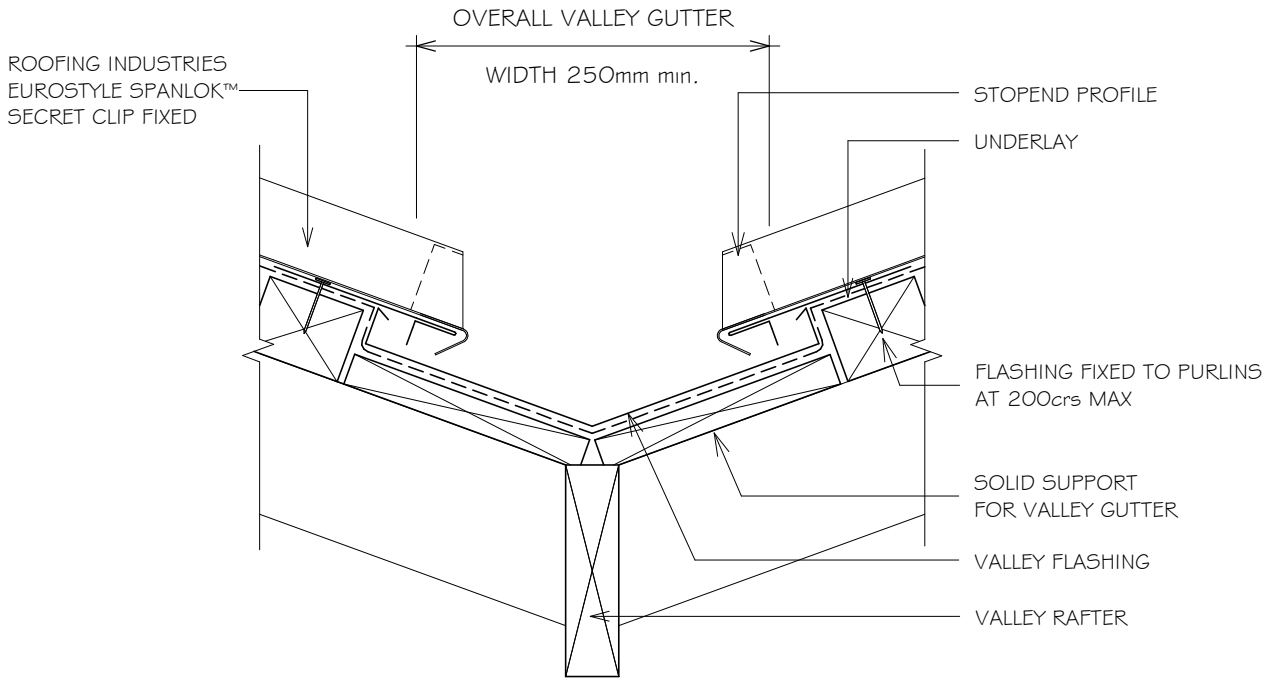

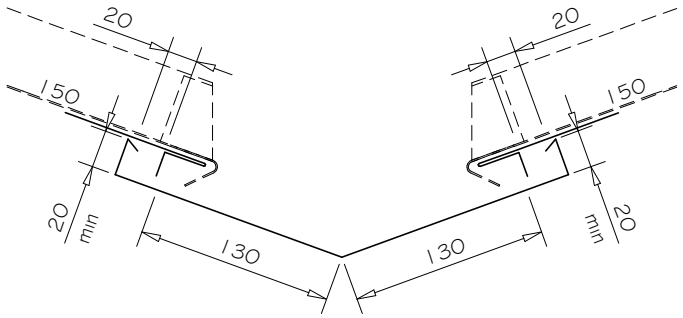

(Dimensions are indicative only)

NOTES:

1. ALLOW FOR SEPARATION FROM ANY CORROSIVE TIMBER TREATMENTS.
2. ALL DIMENSIONS SHOWN ON DRAWINGS ARE NOMINAL +/- 5mm
3. HIGH TO EXTRA HIGH WIND ZONE DOUBLE FIX UNDERFLASHINGS

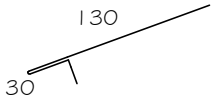

HEM TO BE CEAR OF PAN 3-5mm

NOTES:

- These details are generally in compliance the NZ Metal Roof & Wall Cladding Code of Practice and in some cases specific details by 'Roofing Industries'. Eurostyle falls outsider the criteria of E2/AS1 and this document is therefore not applicable.
- The building designer is ultimatley responsible to ensure that details used meet the requirements of the NZ Building Code for the specific project.
- Details of the supporting structure including cavity battens are indicative only and are the responsibility of the building designer. For steel framed buildings thermal break cavity battens may be required.
- Underlay selection and building wrap types are the responsibility of the designer, Netting or other support is generally required at roof pitches less than 10 degrees combined with a self supporting paper. At roof pitches of 10° and above where non self supporting paper is used or purlin spacing is in excess of self supporting criteria, netting or other support should be used. Alternative support to netting should be used in severe coastal environments including when aluminium is used. (Refer to NZS 2295)
- These details are for Roofing Industries profile/s as nominated and may not be applicable to other profiles.
- This drawing is the copyright of 'Roofing Industries' and can only be copied or reproduced with their permission.
- These details to be read with Roofing Industries profile technical summary regarding wind loads and fixings.
- Further information can be obtained from the NZ Metal Roof & Wall Cladding Code of Practice: www.metalroofing.org.nz or E2/AS1.

Roofing Industries
roof.co.nz

EUROSTYLE SPANLOK™ ROOFING
TYPICAL VALLEY DETAIL

Detail Number: RI-ES45R006BS
Date drawn: 02/02/2018
Scale: 1 : 5@ A4

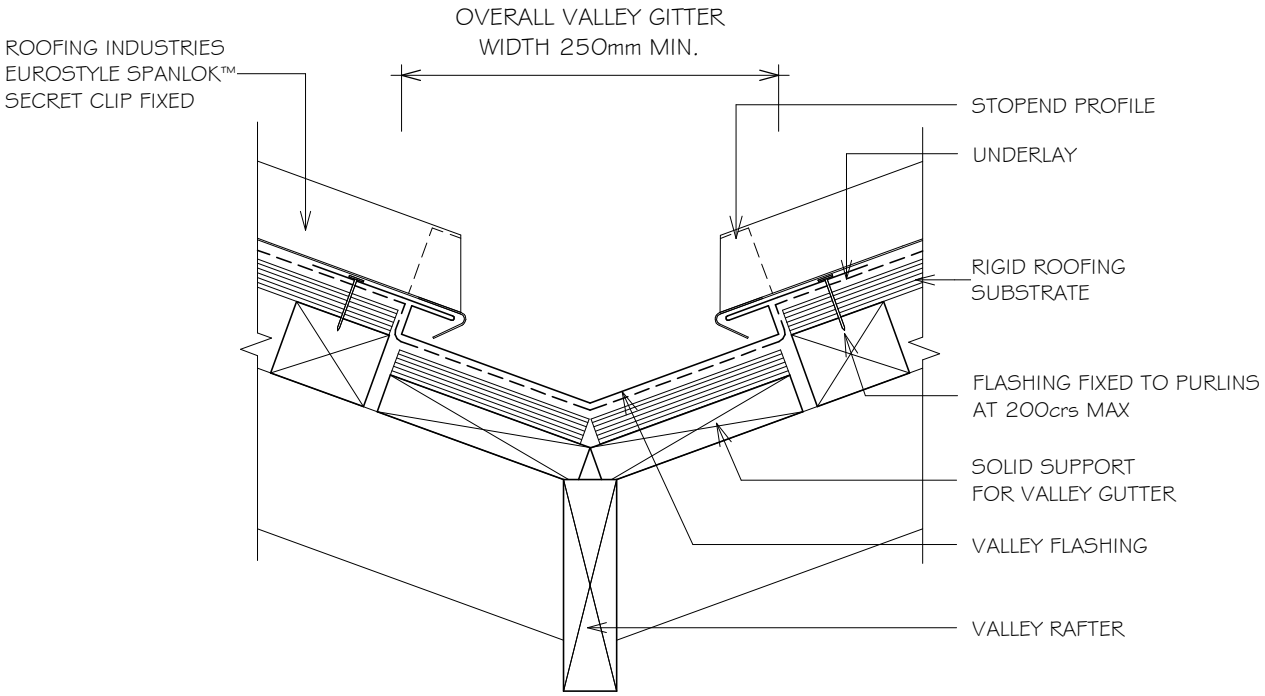

NOTES:

1. ALLOW FOR SEPARATION FROM ANY CORROSIVE TIMBER TREATMENTS.
2. ALL DIMENSIONS SHOWN ON DRAWINGS ARE NOMINAL +/- 5mm
3. HIGH TO EXTRA HIGH WIND ZONE DOUBLE FIX UNDERFLASHINGS

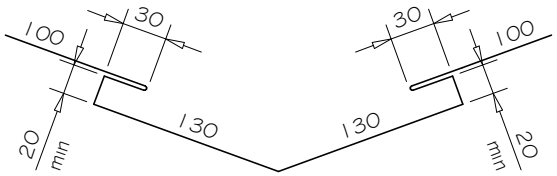

(Dimensions are indicative only)

NOTES:

- These details are generally in compliance the NZ Metal Roof & Wall Cladding Code of Practice and in some cases specific details by 'Roofing Industries'. Eurostyle falls outsider the criteria of E2/AS1 and this document is therefore not applicable.
- The building designer is ultimatley responsible to ensure that details used meet the requirements of the NZ Building Code for the specific project.
- Details of the supporting structure including cavity battens are indicative only and are the responsibility of the building designer. For steel framed buildings thermal break cavity battens may be required.
- Underlay selection and building wrap types are the responsibility of the designer, Netting or other support is generally required at roof pitches less than 10 degrees combined with a self supporting paper. At roof pitches of 10° and above where non self supporting paper is used or purlin spacing is in excess of self supporting criteria, netting or other support should be used. Alternative support to netting should be used in severe coastal environments including when aluminium is used. (Refer to NZS 2295)
- These details are for Roofing Industries profile/s as nominated and may not be applicable to other profiles.
- This drawing is the copyright of 'Roofing Industries' and can only be copied or reproduced with their permission.
- These details to be read with Roofing Industries profile technical summary regarding wind loads and fixings.
- Further information can be obtained from the NZ Metal Roof & Wall Cladding Code of Practice: www.metalroofing.org.nz or E2/AS1.

Roofing Industries
roof.co.nz

EUROSTYLE SPANLOK™ ROOFING
TYPICAL VALLEY DETAIL

Detail Number: RI-ES45R006BS-1

Date drawn: 02/02/2018

Scale: 1 : 5@ A4

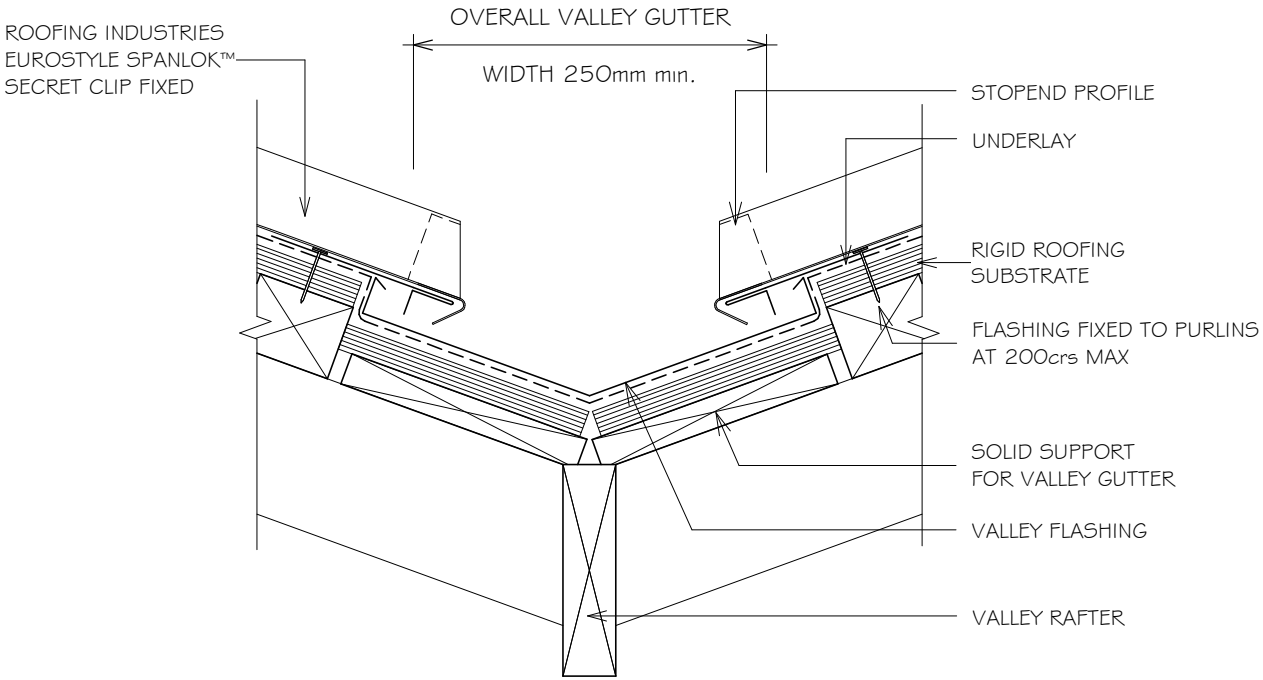

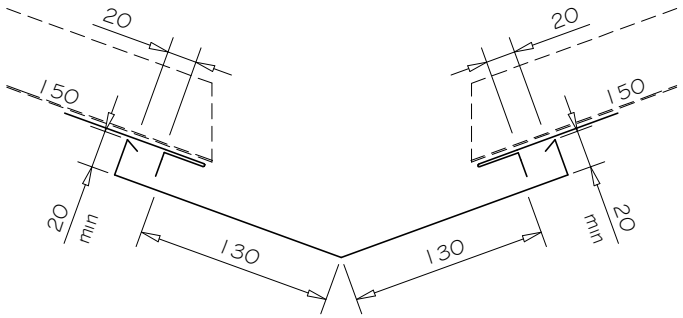

(Dimensions are indicative only)

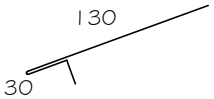

HEM TO BE CEAR OF PAN 3-5mm

NOTES:

1. ALLOW FOR SEPARATION FROM ANY CORROSIVE TIMBER TREATMENTS.
2. ALL DIMENSIONS SHOWN ON DRAWINGS ARE NOMINAL +/- 5mm
3. HIGH TO EXTRA HIGH WIND ZONE DOUBLE FIX UNDERFLASHINGS

NOTES:

- These details are generally in compliance the NZ Metal Roof & Wall Cladding Code of Practice and in some cases specific details by 'Roofing Industries'. Eurostyle falls outsider the criteria of E2/AS1 and this document is therefore not applicable.
- The building designer is ultimatley responsible to ensure that details used meet the requirements of the NZ Building Code for the specific project.
- Details of the supporting structure including cavity battens are indicative only and are the responsibility of the building designer. For steel framed buildings thermal break cavity battens may be required.
- Underlay selection and building wrap types are the responsibility of the designer, Netting or other support is generally required at roof pitches less than 10 degrees combined with a self supporting paper. At roof pitches of 10° and above where non self supporting paper is used or purlin spacing is in excess of self supporting criteria, netting or other support should be used. Alternative support to netting should be used in severe coastal environments including when aluminium is used. (Refer to NZS 2295)
- These details are for Roofing Industries profile/s as nominated and may not be applicable to other profiles.
- This drawing is the copyright of 'Roofing Industries' and can only be copied or reproduced with their permission.
- These details to be read with Roofing Industries profile technical summary regarding wind loads and fixings.
- Further information can be obtained from the NZ Metal Roof & Wall Cladding Code of Practice: www.metalroofing.org.nz or E2/AS1.

Roofing Industries
roof.co.nz

EUROSTYLE SPANLOK™ ROOFING
DORMER VALLEY DETAIL

Detail Number: RI-ES45R006C

Date drawn: 02/02/2018

Scale: 1 : 5@ A4

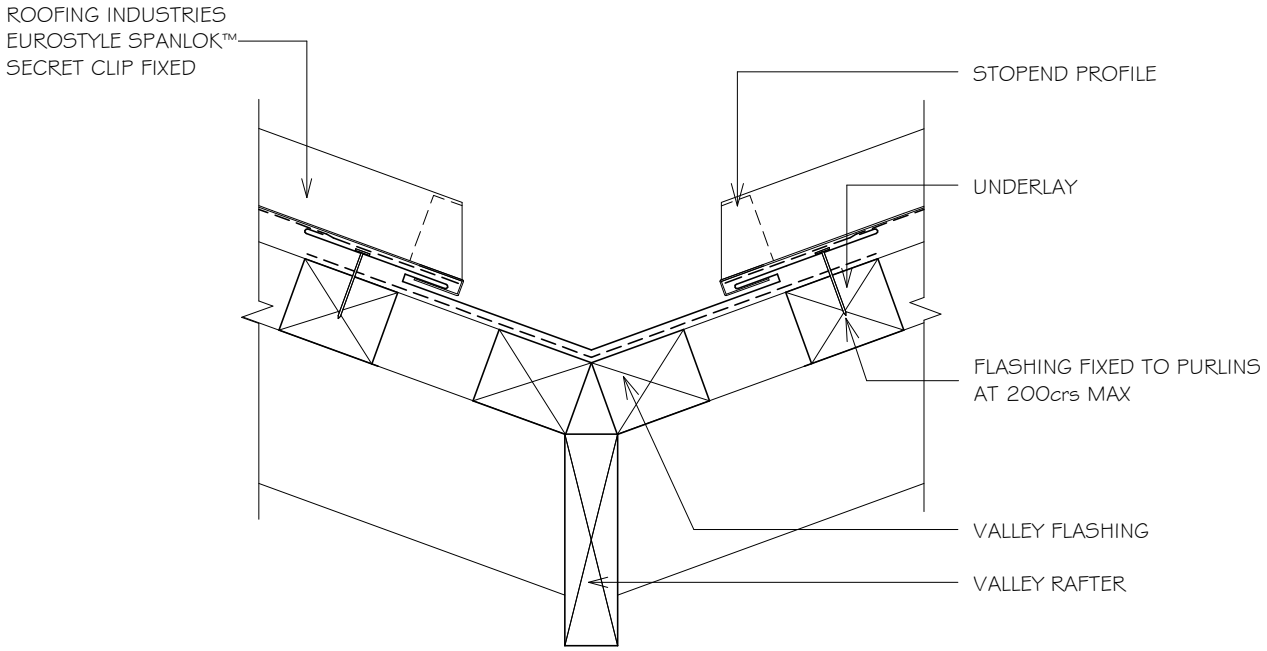

NOTES:

1. ALLOW FOR SEPARATION FROM ANY CORROSIVE TIMBER TREATMENTS.
2. ALL DIMENSIONS SHOWN ON DRAWINGS ARE NOMINAL +/- 5mm
3. HIGH TO EXTRA HIGH WIND ZONE DOUBLE FIX UNDERFLASHINGS
4. DORMER VALLEY MINIMUM PITCH 12 DEGREES.

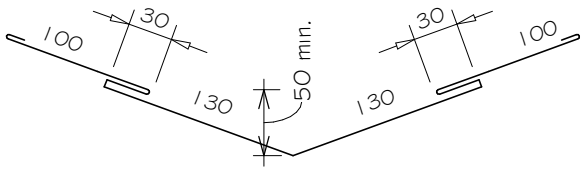

(Dimensions are indicative only)

NOTES:

- These details are generally in compliance the NZ Metal Roof & Wall Cladding Code of Practice and in some cases specific details by 'Roofing Industries'. Eurostyle falls outsider the criteria of E2/AS1 and this document is therefore not applicable.
- The building designer is ultimatley responsible to ensure that details used meet the requirements of the NZ Building Code for the specific project.
- Details of the supporting structure including cavity battens are indicative only and are the responsibility of the building designer. For steel framed buildings thermal break cavity battens may be required.
- Underlay selection and building wrap types are the responsibility of the designer, Netting or other support is generally required at roof pitches less than 10 degrees combined with a self supporting paper. At roof pitches of 10° and above where non self supporting paper is used or purlin spacing is in excess of self supporting criteria, netting or other support should be used. Alternative support to netting should be used in severe coastal environments including when aluminium is used. (Refer to NZS 2295)
- These details are for Roofing Industries profile/s as nominated and may not be applicable to other profiles.
- This drawing is the copyright of 'Roofing Industries' and can only be copied or reproduced with their permission.
- These details to be read with Roofing Industries profile technical summary regarding wind loads and fixings.
- Further information can be obtained from the NZ Metal Roof & Wall Cladding Code of Practice: www.metalroofing.org.nz or E2/AS1.

Roofing Industries
roof.co.nz

EUROSTYLE SPANLOK™ ROOFING
DORMER VALLEY DETAIL

Detail Number: RI-ES45R006CS

Date drawn: 02/02/2018

Scale: 1 : 5@ A4

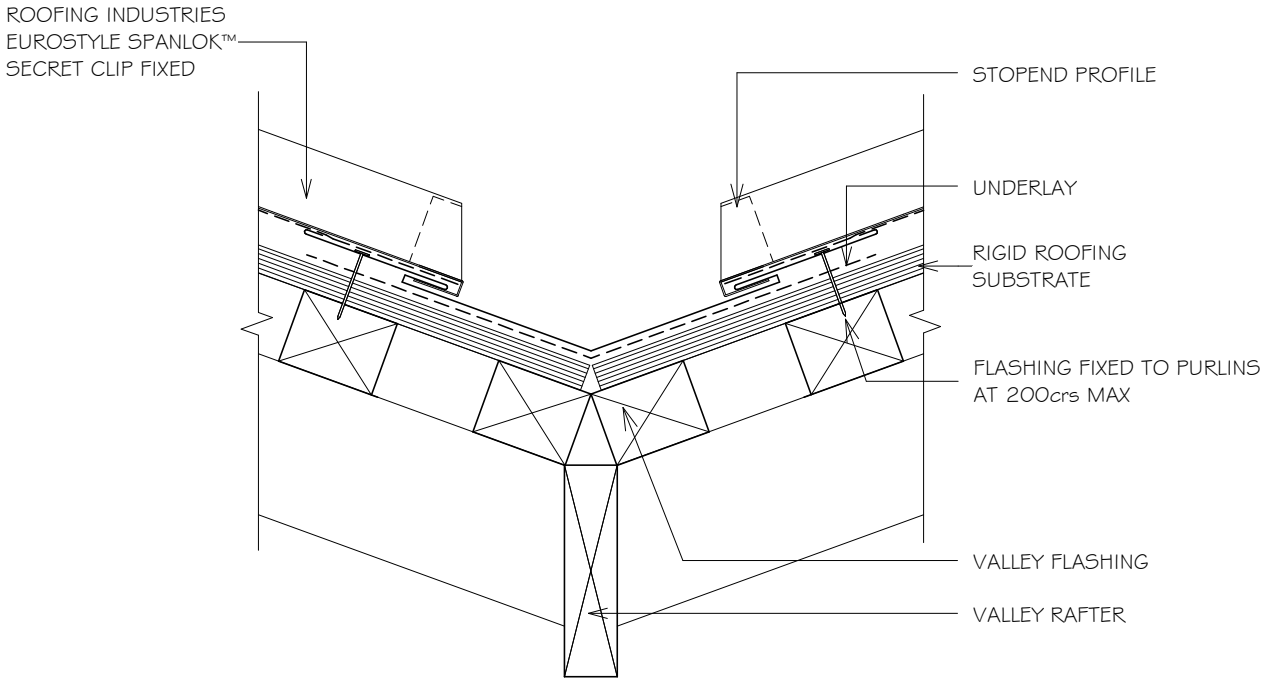

NOTES:

1. ALLOW FOR SEPARATION FROM ANY CORROSIVE TIMBER TREATMENTS.
2. ALL DIMENSIONS SHOWN ON DRAWINGS ARE NOMINAL +/- 5mm
3. HIGH TO EXTRA HIGH WIND ZONE DOUBLE FIX UNDERFLASHINGS
4. DORMER VALLEY MINIMUM PITCH 12 DEGREES.

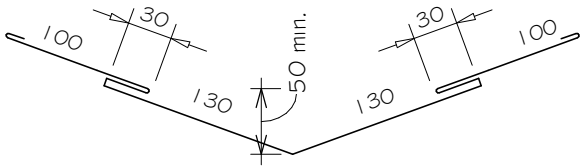

(Dimensions are indicative only)

NOTES:

- These details are generally in compliance the NZ Metal Roof & Wall Cladding Code of Practice and in some cases specific details by 'Roofing Industries'. Eurostyle falls outsider the criteria of E2/AS1 and this document is therefore not applicable.
- The building designer is ultimatley responsible to ensure that details used meet the requirements of the NZ Building Code for the specific project.
- Details of the supporting structure including cavity battens are indicative only and are the responsibility of the building designer. For steel framed buildings thermal break cavity battens may be required.
- Underlay selection and building wrap types are the responsibility of the designer, Netting or other support is generally required at roof pitches less than 10 degrees combined with a self supporting paper. At roof pitches of 10° and above where non self supporting paper is used or purlin spacing is in excess of self supporting criteria, netting or other support should be used. Alternative support to netting should be used in severe coastal environments including when aluminium is used. (Refer to NZS 2295)
- These details are for Roofing Industries profile/s as nominated and may not be applicable to other profiles.
- This drawing is the copyright of 'Roofing Industries' and can only be copied or reproduced with their permission.
- These details to be read with Roofing Industries profile technical summary regarding wind loads and fixings.
- Further information can be obtained from the NZ Metal Roof & Wall Cladding Code of Practice: www.metalroofing.org.nz or E2/AS1.

Roofing Industries
roof.co.nz

EUROSTYLE SPANLOK™ ROOFING
INTERNAL GUTTER

Detail Number: RI-ES45R007A

Date drawn: 02/02/2018

Scale: 1 : 5@ A4

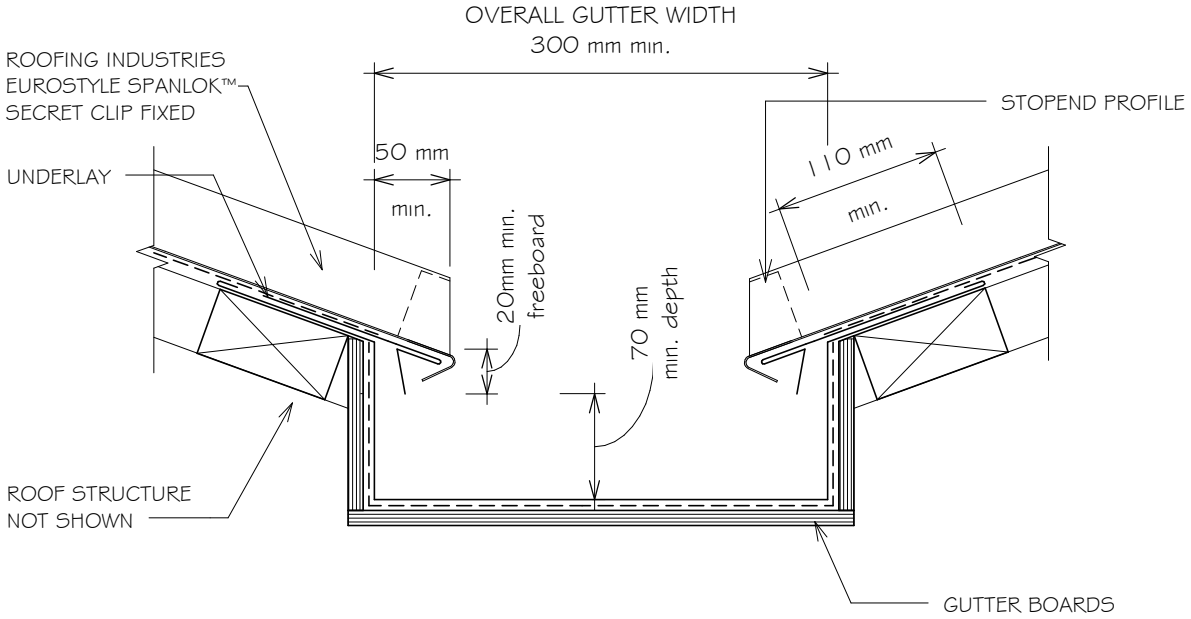

NOTES:

1. GUTTERS INSTALLED OVER ROOF UNDERLAY IF GUTTER BOARDS ARE TREATED TIMBER.
2. INTERNAL GUTTER SHALL BE SIZED TO SUIT THE ROOF CATCHMENT AREA, BUT SHALL BE NO LESS THAN SHOWN IN THIS FIGURE.
3. INTERNAL GUTTER SHOULD BE MADE FROM NONFERROUS METAL'S COMPATIBLE WITH THE ROOFING MATERIAL.
4. GUTTER SIZES TO BE CALCULATED FROM E1/AS1
5. ALLOW FOR SEPARATION FROM ANY CORROSIVE TIMBER TREATMENTS.
6. ALL DIMENSIONS SHOWN ON DRAWINGS ARE NOMINAL +/- 5mm
7. HIGH TO EXTRA HIGH WIND ZONE DOUBLE FIX UNDERFLASHINGS

NOTES:

- These details are generally in compliance the NZ Metal Roof & Wall Cladding Code of Practice and in some cases specific details by 'Roofing Industries'. Eurostyle falls outsider the criteria of E2/AS1 and this document is therefore not applicable.
- The building designer is ultimatley responsible to ensure that details used meet the requirements of the NZ Building Code for the specific project.
- Details of the supporting structure including cavity battens are indicative only and are the responsibility of the building designer. For steel framed buildings thermal break cavity battens may be required.
- Underlay selection and building wrap types are the responsibility of the designer, Netting or other support is generally required at roof pitches less than 10 degrees combined with a self supporting paper. At roof pitches of 10° and above where non self supporting paper is used or purlin spacing is in excess of self supporting criteria, netting or other support should be used. Alternative support to netting should be used in severe coastal environments including when aluminium is used. (Refer to NZS 2295)
- These details are for Roofing Industries profile/s as nominated and may not be applicable to other profiles.
- This drawing is the copyright of 'Roofing Industries' and can only be copied or reproduced with their permission.
- These details to be read with Roofing Industries profile technical summary regarding wind loads and fixings.
- Further information can be obtained from the NZ Metal Roof & Wall Cladding Code of Practice: www.metalroofing.org.nz or E2/AS1.

Roofing Industries
roof.co.nz

EUROSTYLE SPANLOK™ ROOFING
INTERNAL GUTTER

Detail Number: RI-ES45R007AS

Date drawn: 02/02/2018

Scale: 1 : 5@ A4

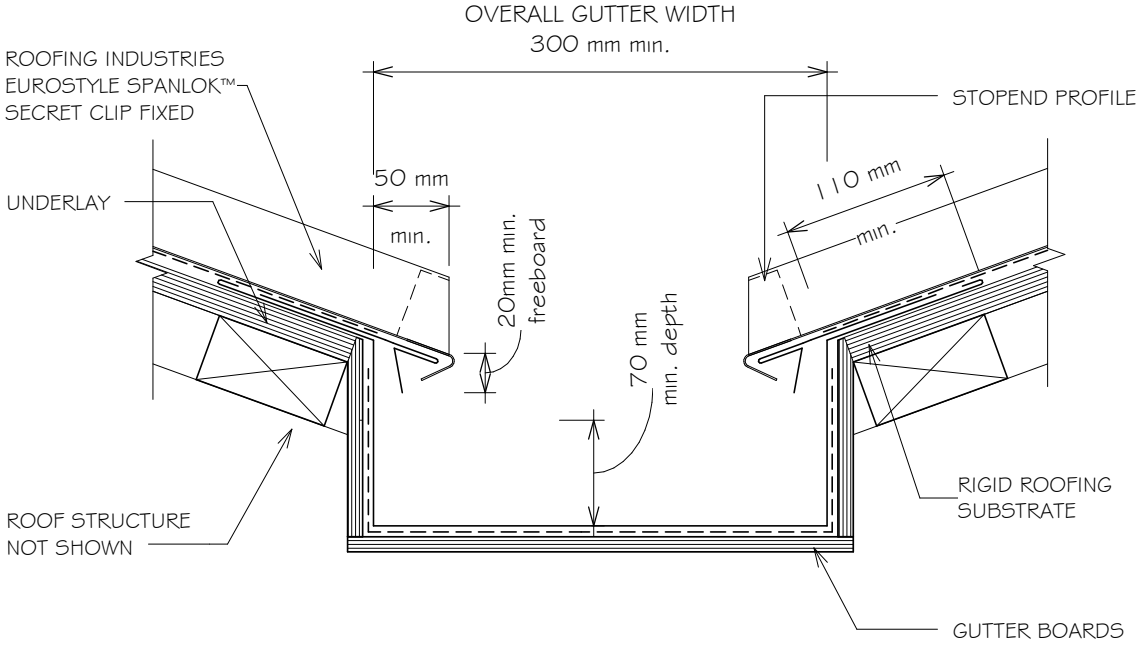

NOTES:

1. GUTTERS INSTALLED OVER ROOF UNDERLAY IF GUTTER BOARDS ARE TREATED TIMBER.
2. INTERNAL GUTTER SHALL BE SIZED TO SUIT THE ROOF CATCHMENT AREA, BUT SHALL BE NO LESS THAN SHOWN IN THIS FIGURE.
3. INTERNAL GUTTER SHOULD BE MADE FROM NONFERROUS METAL'S COMPATIBLE WITH THE ROOFING MATERIAL.
4. GUTTER SIZES TO BE CALCULATED FROM E1/AS1
5. ALLOW FOR SEPARATION FROM ANY CORROSIVE TIMBER TREATMENTS.
6. ALL DIMENSIONS SHOWN ON DRAWINGS ARE NOMINAL +/- 5mm
7. HIGH TO EXTRA HIGH WIND ZONE DOUBLE FIX UNDERFLASHINGS

NOTES:

- These details are generally in compliance the NZ Metal Roof & Wall Cladding Code of Practice and in some cases specific details by 'Roofing Industries'. Eurostyle falls outsider the criteria of E2/AS1 and this document is therefore not applicable.
- The building designer is ultimatley responsible to ensure that details used meet the requirements of the NZ Building Code for the specific project.
- Details of the supporting structure including cavity battens are indicative only and are the responsibility of the building designer. For steel framed buildings thermal break cavity battens may be required.
- Underlay selection and building wrap types are the responsibility of the designer, Netting or other support is generally required at roof pitches less than 10 degrees combined with a self supporting paper. At roof pitches of 10° and above where non self supporting paper is used or purlin spacing is in excess of self supporting criteria, netting or other support should be used. Alternative support to netting should be used in severe coastal environments including when aluminium is used. (Refer to NZS 2295)
- These details are for Roofing Industries profile/s as nominated and may not be applicable to other profiles.
- This drawing is the copyright of 'Roofing Industries' and can only be copied or reproduced with their permission.
- These details to be read with Roofing Industries profile technical summary regarding wind loads and fixings.
- Further information can be obtained from the NZ Metal Roof & Wall Cladding Code of Practice: www.metalroofing.org.nz or E2/AS1.

Roofing Industries
roof.co.nz

EUROSTYLE SPANLOK™ ROOFING
PARALLEL APRON FLASHING (NON CAVITY) TYPE 1

Detail Number: RI-ES45R010A-1
Date drawn: 02/02/2018
Scale: 1 : 5@ A4

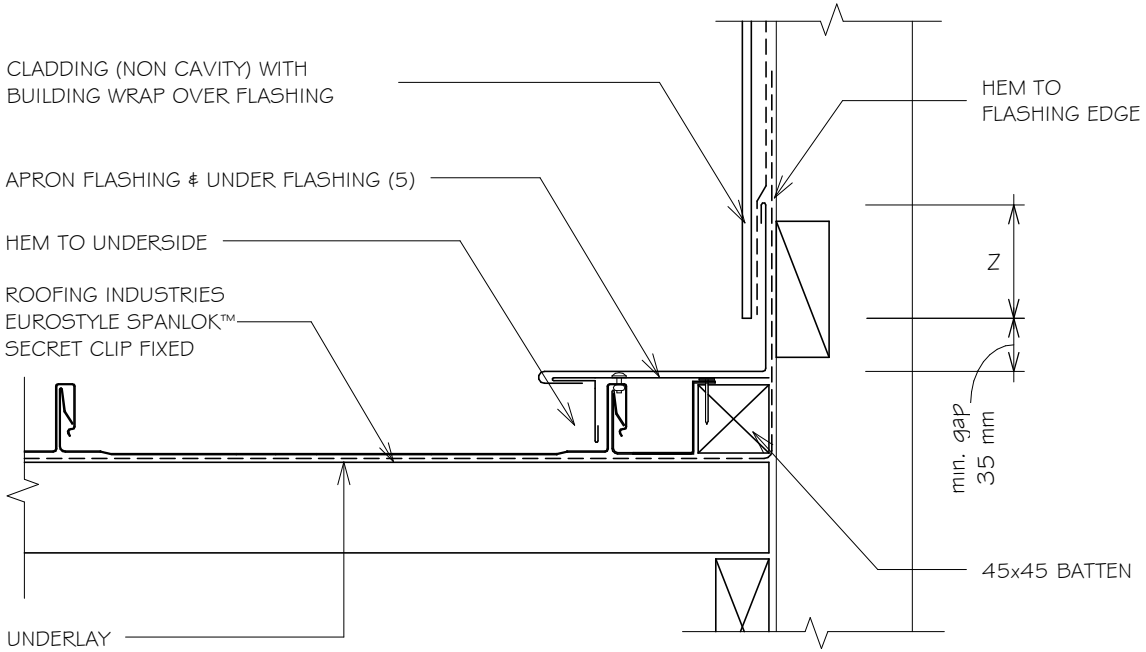

WIND ZONE	MINIMUM
	Z
SITUATION 1 (1)	75mm (3)
SITUATION 2 (2)	100mm (3)

NOTES:

DESIGNER TO ENSURE DURABILITY OF FLASHING MATERIAL;

1. SITUATION 1: IN LOW, MEDIUM OR HIGH WIND ZONES, WHERE ROOF PITCH IS 10° OR GREATER.
2. SITUATION 2: FOR ALL ROOF PITCHES IN VERY HIGH & EXTRA HIGH WIND ZONES, FOR ALL WIND ZONES WHERE ROOF PITCH IS LESS THAN 10°.
3. IF HEM IS NOT USED INCREASE DISTANCE BY 25mm.
4. ALLOW FOR SEPARATION FROM ANY CORROSIVE TIMBER TREATMENTS.
5. HIGH TO EXTRA HIGH WIND ZONE DOUBLE FIX UNDERFLASHINGS.
6. ALL DIMENSIONS SHOWN ON DRAWINGS ARE NOMINAL +/- 5mm
7. DRY PAN REQUIRED OVER 50mm FROM BATTEN

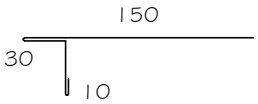

HEM TO BE CLEAR OF PAN 3-5mm
REFER NOTE (5)

NOTES:

- These details are generally in compliance the NZ Metal Roof & Wall Cladding Code of Practice and in some cases specific details by 'Roofing Industries'. Eurostyle falls outsider the criteria of E2/AS1 and this document is therefore not applicable.
- The building designer is ultimatley responsible to ensure that details used meet the requirements of the NZ Building Code for the specific project.
- Details of the supporting structure including cavity battens are indicative only and are the responsibility of the building designer. For steel framed buildings thermal break cavity battens may be required.
- Underlay selection and building wrap types are the responsibility of the designer, Netting or other support is generally required at roof pitches less than 10 degrees combined with a self supporting paper. At roof pitches of 10° and above where non self supporting paper is used or purlin spacing is in excess of self supporting criteria, netting or other support should be used. Alternative support to netting should be used in severe coastal environments including when aluminium is used. (Refer to NZS 2295)
- These details are for Roofing Industries profile/s as nominated and may not be applicable to other profiles.
- This drawing is the copyright of 'Roofing Industries' and can only be copied or reproduced with their permission.
- These details to be read with Roofing Industries profile technical summary regarding wind loads and fixings.
- Further information can be obtained from the NZ Metal Roof & Wall Cladding Code of Practice: www.metalroofing.org.nz or E2/AS1.

Roofing Industries
roof.co.nz

EUROSTYLE SPANLOK™ ROOFING
PARALLEL APRON FLASHING (NON CAVITY) TYPE 2

Detail Number: RI-ES45R010A-1A
Date drawn: 02/02/2018
Scale: 1 : 5@ A4

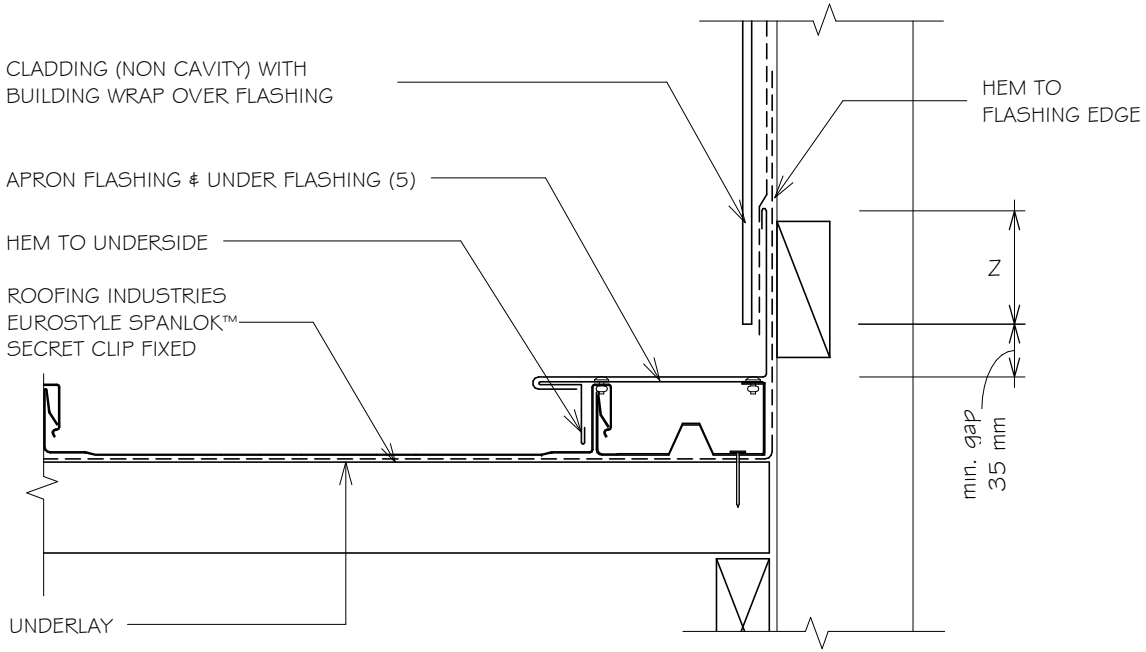

WIND ZONE	MINIMUM
	Z
SITUATION 1 (1)	75mm (3)
SITUATION 2 (2)	100mm (3)

NOTES:

DESIGNER TO ENSURE DURABILITY OF FLASHING MATERIAL;

1. SITUATION 1: IN LOW, MEDIUM OR HIGH WIND ZONES, WHERE ROOF PITCH IS 10° OR GREATER.
2. SITUATION 2: FOR ALL ROOF PITCHES IN VERY HIGH & EXTRA HIGH WIND ZONES, FOR ALL WIND ZONES WHERE ROOF PITCH IS LESS THAN 10°.
3. IF HEM IS NOT USED INCREASE DISTANCE BY 25mm.
4. ALLOW FOR SEPARATION FROM ANY CORROSIVE TIMBER TREATMENTS.
5. HIGH TO EXTRA HIGH WIND ZONE DOUBLE FIX UNDERFLASHINGS.
6. ALL DIMENSIONS SHOWN ON DRAWINGS ARE NOMINAL +/- 5mm

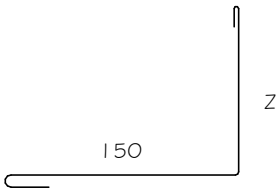

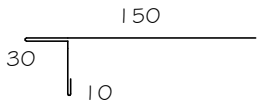

HEM TO BE CLEAR OF PAN 3-5mm
REFER NOTE (5)

NOTES:

- These details are generally in compliance the NZ Metal Roof & Wall Cladding Code of Practice and in some cases specific details by 'Roofing Industries'. Eurostyle falls outsider the criteria of E2/AS1 and this document is therefore not applicable.
- The building designer is ultimatley responsible to ensure that details used meet the requirements of the NZ Building Code for the specific project.
- Details of the supporting structure including cavity battens are indicative only and are the responsibility of the building designer. For steel framed buildings thermal break cavity battens may be required.
- Underlay selection and building wrap types are the responsibility of the designer, Netting or other support is generally required at roof pitches less than 10 degrees combined with a self supporting paper. At roof pitches of 10° and above where non self supporting paper is used or purlin spacing is in excess of self supporting criteria, netting or other support should be used. Alternative support to netting should be used in severe coastal environments including when aluminium is used. (Refer to NZS 2295)
- These details are for Roofing Industries profile/s as nominated and may not be applicable to other profiles.
- This drawing is the copyright of 'Roofing Industries' and can only be copied or reproduced with their permission.
- These details to be read with Roofing Industries profile technical summary regarding wind loads and fixings.
- Further information can be obtained from the NZ Metal Roof & Wall Cladding Code of Practice: www.metalroofing.org.nz or E2/AS1.

Roofing Industries
roof.co.nz

EUROSTYLE SPANLOK™ ROOFING
PARALLEL APRON FLASHING (NON CAVITY) TYPE 1

Detail Number: RI-ES45R010AS-1
Date drawn: 02/02/2018
Scale: 1 : 5@ A4

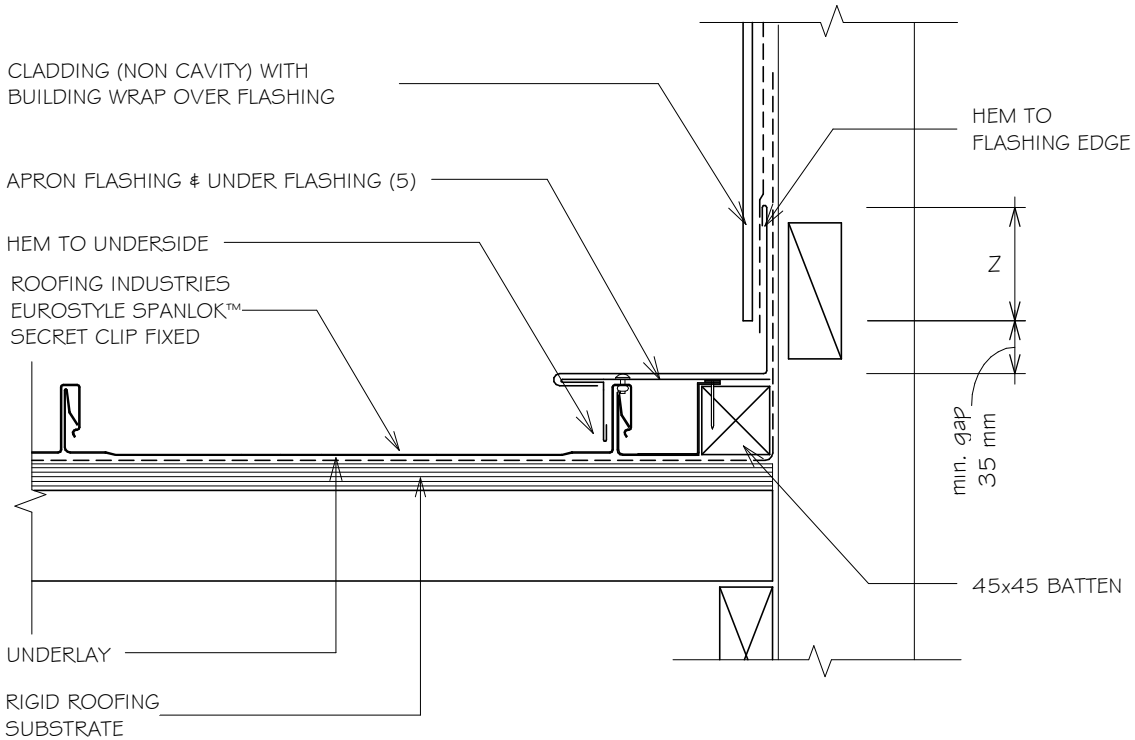

WIND ZONE	MINIMUM
	Z
SITUATION 1 (1)	75mm (3)
SITUATION 2 (2)	100mm (3)

NOTES:

DESIGNER TO ENSURE DURABILITY OF FLASHING MATERIAL;

1. SITUATION 1: IN LOW, MEDIUM OR HIGH WIND ZONES, WHERE ROOF PITCH IS 10° OR GREATER.
2. SITUATION 2: FOR ALL ROOF PITCHES IN VERY HIGH & EXTRA HIGH WIND ZONES, FOR ALL WIND ZONES WHERE ROOF PITCH IS LESS THAN 10°.
3. IF HEM IS NOT USED INCREASE DISTANCE BY 25mm.
4. ALLOW FOR SEPARATION FROM ANY CORROSIVE TIMBER TREATMENTS.
5. HIGH TO EXTRA HIGH WIND ZONE DOUBLE FIX UNDERFLASHINGS.
6. ALL DIMENSIONS SHOWN ON DRAWINGS ARE NOMINAL +/- 5mm
7. DRY PAN REQUIRED OVER 50mm FROM BATTEN

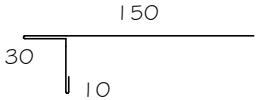

HEM TO BE CLEAR OF PAN 3-5mm
REFER NOTE (5)

NOTES:

- These details are generally in compliance the NZ Metal Roof & Wall Cladding Code of Practice and in some cases specific details by 'Roofing Industries'. Eurostyle falls outsider the criteria of E2/AS1 and this document is therefore not applicable.
- The building designer is ultimatley responsible to ensure that details used meet the requirements of the NZ Building Code for the specific project.
- Details of the supporting structure including cavity battens are indicative only and are the responsibility of the building designer. For steel framed buildings thermal break cavity battens may be required.
- Underlay selection and building wrap types are the responsibility of the designer, Netting or other support is generally required at roof pitches less than 10 degrees combined with a self supporting paper. At roof pitches of 10° and above where non self supporting paper is used or purlin spacing is in excess of self supporting criteria, netting or other support should be used. Alternative support to netting should be used in severe coastal environments including when aluminium is used. (Refer to NZS 2295)
- These details are for Roofing Industries profile/s as nominated and may not be applicable to other profiles.
- This drawing is the copyright of 'Roofing Industries' and can only be copied or reproduced with their permission.
- These details to be read with Roofing Industries profile technical summary regarding wind loads and fixings.
- Further information can be obtained from the NZ Metal Roof & Wall Cladding Code of Practice: www.metalroofing.org.nz or E2/AS1.

Roofing Industries
roof.co.nz

EUROSTYLE SPANLOK™ ROOFING
PARALLEL APRON FLASHING (NON CAVITY) TYPE 2

Detail Number: RI-ES45R010AS-1A
Date drawn: 02/02/2018
Scale: 1 : 5@ A4

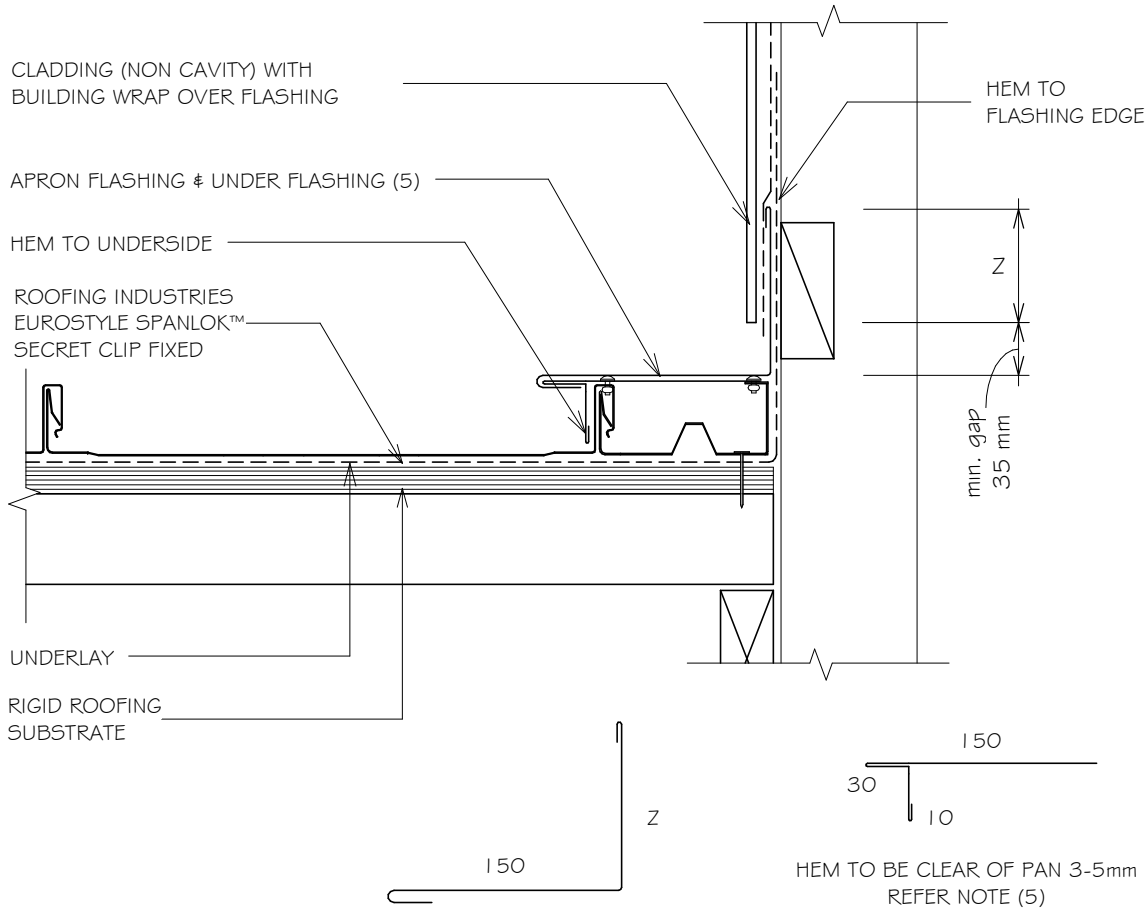

WIND ZONE	MINIMUM
	Z
SITUATION 1 (1)	75mm (3)
SITUATION 2 (2)	100mm (3)

NOTES:

DESIGNER TO ENSURE DURABILITY OF FLASHING MATERIAL;

1. SITUATION 1: IN LOW, MEDIUM OR HIGH WIND ZONES, WHERE ROOF PITCH IS 10° OR GREATER.
2. SITUATION 2: FOR ALL ROOF PITCHES IN VERY HIGH & EXTRA HIGH WIND ZONES, FOR ALL WIND ZONES WHERE ROOF PITCH IS LESS THAN 10°.
3. IF HEM IS NOT USED INCREASE DISTANCE BY 25mm.
4. ALLOW FOR SEPARATION FROM ANY CORROSIVE TIMBER TREATMENTS.
5. HIGH TO EXTRA HIGH WIND ZONE DOUBLE FIX.
6. ALL DIMENSIONS SHOWN ON DRAWINGS ARE NOMINAL +/- 5mm

NOTES:

- These details are generally in compliance the NZ Metal Roof & Wall Cladding Code of Practice and in some cases specific details by 'Roofing Industries'. Eurostyle falls outsider the criteria of E2/AS1 and this document is therefore not applicable.
- The building designer is ultimatley responsible to ensure that details used meet the requirements of the NZ Building Code for the specific project.
- Details of the supporting structure including cavity battens are indicative only and are the responsibility of the building designer. For steel framed buildings thermal break cavity battens may be required.
- Underlay selection and building wrap types are the responsibility of the designer, Netting or other support is generally required at roof pitches less than 10 degrees combined with a self supporting paper. At roof pitches of 10° and above where non self supporting paper is used or purlin spacing is in excess of self supporting criteria, netting or other support should be used. Alternative support to netting should be used in severe coastal environments including when aluminium is used. (Refer to NZS 2295)
- These details are for Roofing Industries profile/s as nominated and may not be applicable to other profiles.
- This drawing is the copyright of 'Roofing Industries' and can only be copied or reproduced with their permission.
- These details to be read with Roofing Industries profile technical summary regarding wind loads and fixings.
- Further information can be obtained from the NZ Metal Roof & Wall Cladding Code of Practice: www.metalroofing.org.nz or E2/AS1.

Roofing Industries
roof.co.nz

EUROSTYLE SPANLOK™ ROOFING
PARALLEL APRON FLASHING (CAVITY) TYPE 1

Detail Number: RI-ES45R010B-1
Date drawn: 02/02/2018
Scale: 1 : 5@ A4

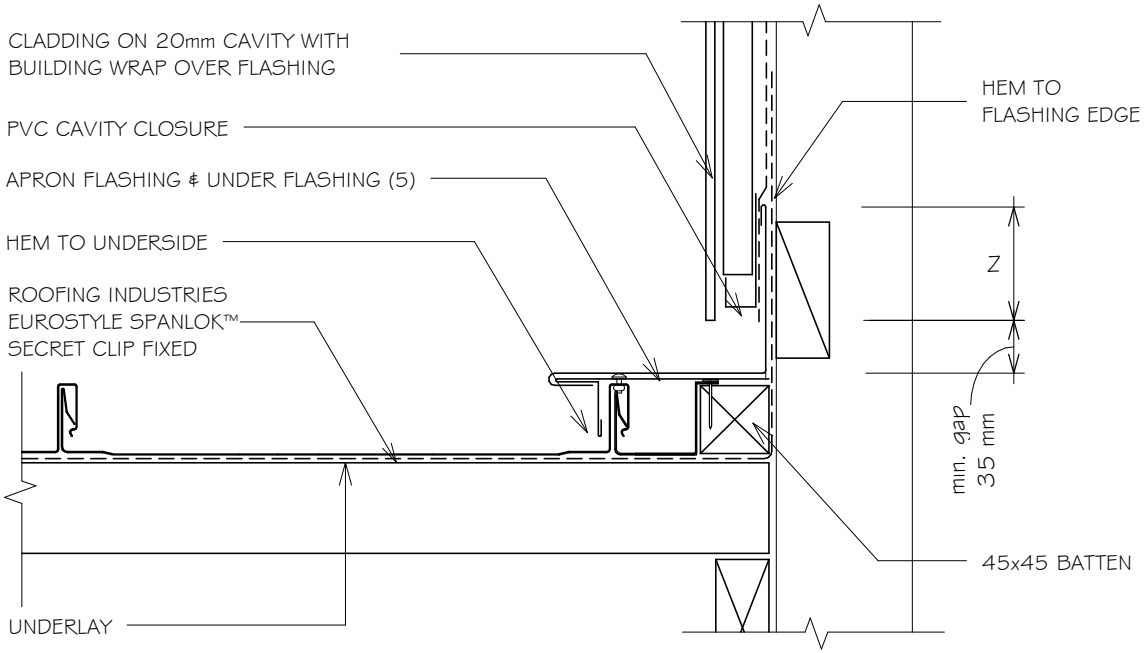

WIND ZONE	MINIMUM
	Z
SITUATION 1 (1)	75mm (3)
SITUATION 2 (2)	100mm (3)

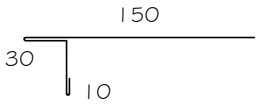

HEM TO BE CLEAR OF PAN 3-5mm
REFER NOTE (5)

NOTES:

DESIGNER TO ENSURE DURABILITY OF FLASHING MATERIAL;

1. SITUATION 1: IN LOW, MEDIUM OR HIGH WIND ZONES, WHERE ROOF PITCH IS 10° OR GREATER.
2. SITUATION 2: FOR ALL ROOF PITCHES IN VERY HIGH & EXTRA HIGH WIND ZONES, FOR ALL WIND ZONES WHERE ROOF PITCH IS LESS THAN 10°.
3. IF HEM IS NOT USED INCREASE DISTANCE BY 25mm.
4. ALLOW FOR SEPARATION FROM ANY CORROSIVE TIMBER TREATMENTS.
5. HIGH TO EXTRA HIGH WIND ZONE DOUBLE FIX.
6. ALL DIMENSIONS SHOWN ON DRAWINGS ARE NOMINAL +/- 5mm

NOTES:

- These details are generally in compliance the NZ Metal Roof & Wall Cladding Code of Practice and in some cases specific details by 'Roofing Industries'. Eurostyle falls outsider the criteria of E2/AS1 and this document is therefore not applicable.
- The building designer is ultimatley responsible to ensure that details used meet the requirements of the NZ Building Code for the specific project.
- Details of the supporting structure including cavity battens are indicative only and are the responsibility of the building designer. For steel framed buildings thermal break cavity battens may be required.
- Underlay selection and building wrap types are the responsibility of the designer, Netting or other support is generally required at roof pitches less than 10 degrees combined with a self supporting paper. At roof pitches of 10° and above where non self supporting paper is used or purlin spacing is in excess of self supporting criteria, netting or other support should be used. Alternative support to netting should be used in severe coastal environments including when aluminium is used. (Refer to NZS 2295)
- These details are for Roofing Industries profile/s as nominated and may not be applicable to other profiles.
- This drawing is the copyright of 'Roofing Industries' and can only be copied or reproduced with their permission.
- These details to be read with Roofing Industries profile technical summary regarding wind loads and fixings.
- Further information can be obtained from the NZ Metal Roof & Wall Cladding Code of Practice: www.metalroofing.org.nz or E2/AS1.

Roofing Industries
roof.co.nz

EUROSTYLE SPANLOK™ ROOFING
PARALLEL APRON FLASHING (CAVITY) TYPE 2

Detail Number: RI-ES45R010B-1A
Date drawn: 02/02/2018
Scale: 1 : 5@ A4

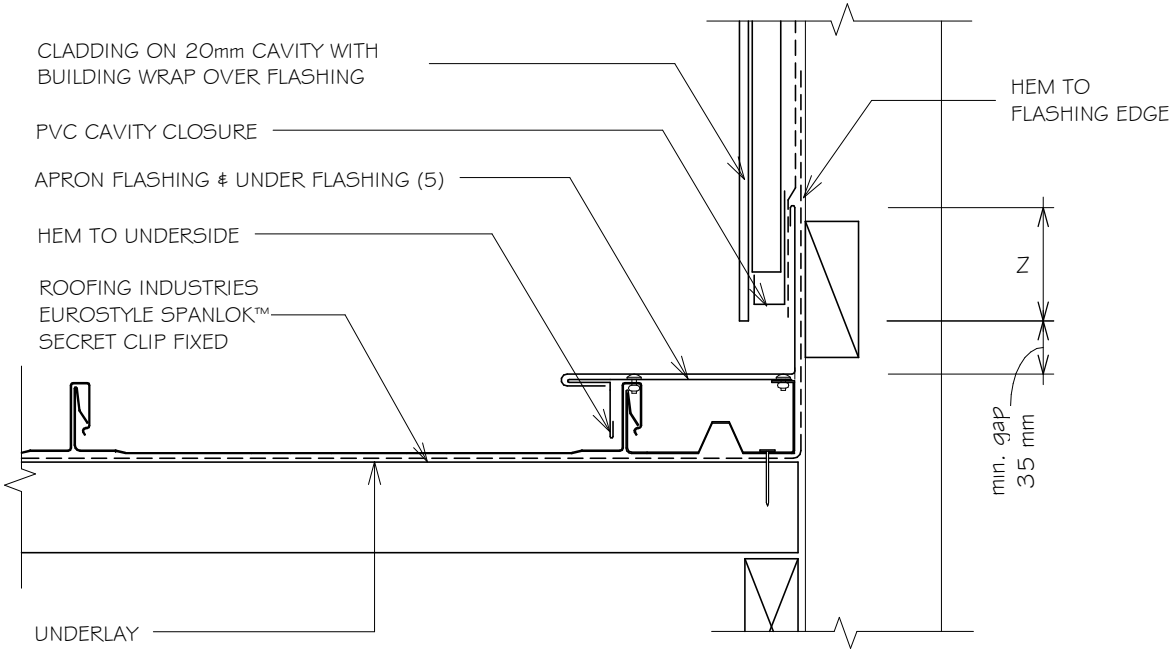

WIND ZONE	MINIMUM
	Z
SITUATION 1 (1)	75mm (3)
SITUATION 2 (2)	100mm (3)

NOTES:

DESIGNER TO ENSURE DURABILITY OF FLASHING MATERIAL;

1. SITUATION 1: IN LOW, MEDIUM OR HIGH WIND ZONES, WHERE ROOF PITCH IS 10° OR GREATER.
2. SITUATION 2: FOR ALL ROOF PITCHES IN VERY HIGH & EXTRA HIGH WIND ZONES, FOR ALL WIND ZONES WHERE ROOF PITCH IS LESS THAN 10°.
3. IF HEM IS NOT USED INCREASE DISTANCE BY 25mm.
4. ALLOW FOR SEPARATION FROM ANY CORROSIVE TIMBER TREATMENTS.
5. HIGH TO EXTRA HIGH WIND ZONE DOUBLE FIX UNDERFLASHINGS.
6. ALL DIMENSIONS SHOWN ON DRAWINGS ARE NOMINAL +/- 5mm

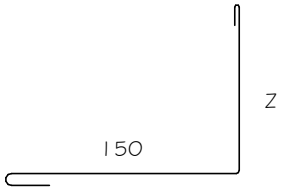

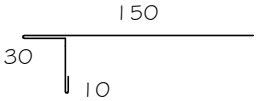

HEM TO BE CLEAR OF PAN 3-5mm
REFER NOTE (5)

NOTES:

- These details are generally in compliance the NZ Metal Roof & Wall Cladding Code of Practice and in some cases specific details by 'Roofing Industries'. Eurostyle falls outsider the criteria of E2/AS1 and this document is therefore not applicable.
- The building designer is ultimatley responsible to ensure that details used meet the requirements of the NZ Building Code for the specific project.
- Details of the supporting structure including cavity battens are indicative only and are the responsibility of the building designer. For steel framed buildings thermal break cavity battens may be required.
- Underlay selection and building wrap types are the responsibility of the designer, Netting or other support is generally required at roof pitches less than 10 degrees combined with a self supporting paper. At roof pitches of 10° and above where non self supporting paper is used or purlin spacing is in excess of self supporting criteria, netting or other support should be used. Alternative support to netting should be used in severe coastal environments including when aluminium is used. (Refer to NZS 2295)
- These details are for Roofing Industries profile/s as nominated and may not be applicable to other profiles.
- This drawing is the copyright of 'Roofing Industries' and can only be copied or reproduced with their permission.
- These details to be read with Roofing Industries profile technical summary regarding wind loads and fixings.
- Further information can be obtained from the NZ Metal Roof & Wall Cladding Code of Practice: www.metalroofing.org.nz or E2/AS1.

Roofing Industries
roof.co.nz

EUROSTYLE SPANLOK™ ROOFING
PARALLEL APRON FLASHING (CAVITY) TYPE 1

Detail Number: RI-ES45R010BS-1
Date drawn: 02/02/2018
Scale: 1 : 5@ A4

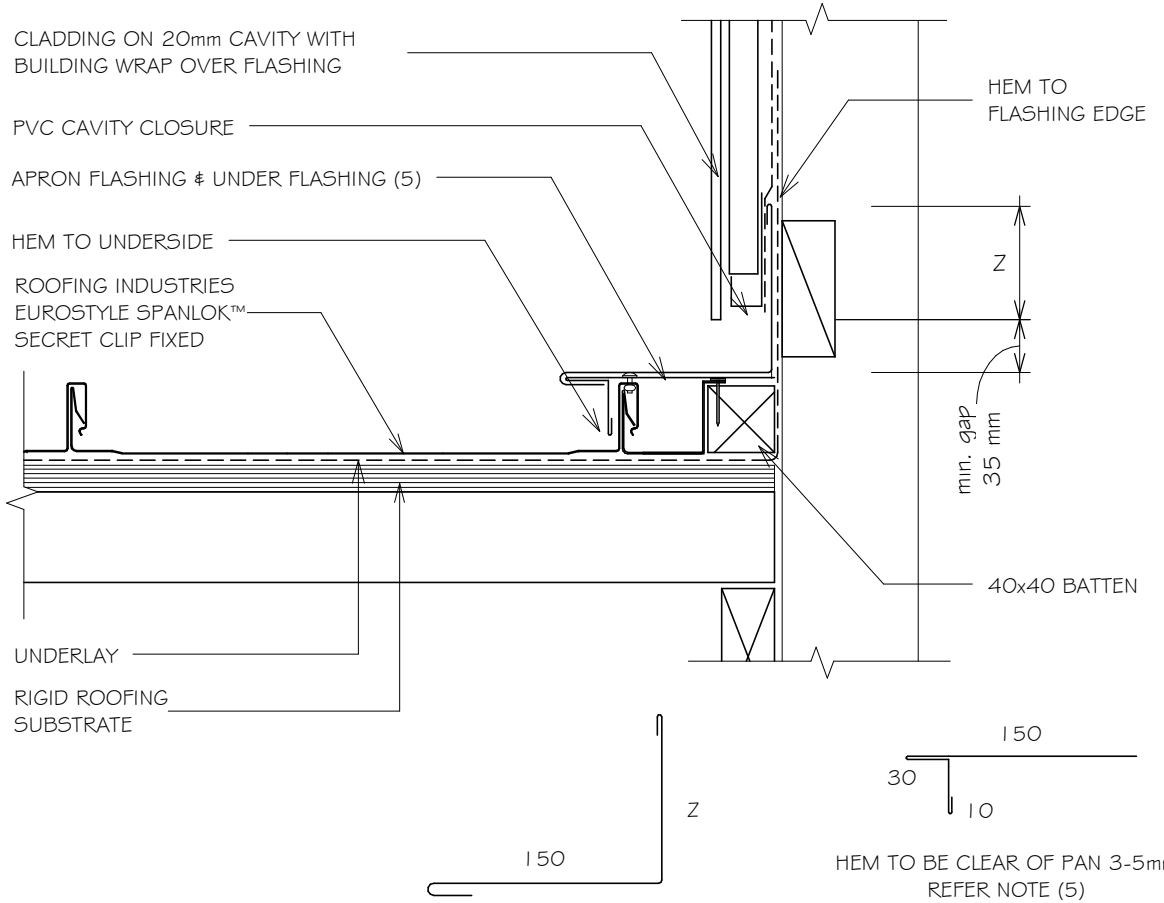

WIND ZONE	MINIMUM
	Z
SITUATION 1 (1)	75mm (3)
SITUATION 2 (2)	100mm (3)

NOTES:

DESIGNER TO ENSURE DURABILITY OF FLASHING MATERIAL;

1. SITUATION 1: IN LOW, MEDIUM OR HIGH WIND ZONES, WHERE ROOF PITCH IS 10° OR GREATER.
2. SITUATION 2: FOR ALL ROOF PITCHES IN VERY HIGH & EXTRA HIGH WIND ZONES, FOR ALL WIND ZONES WHERE ROOF PITCH IS LESS THAN 10°.
3. IF HEM IS NOT USED INCREASE DISTANCE BY 25mm.
4. ALLOW FOR SEPARATION FROM ANY CORROSIVE TIMBER TREATMENTS.
5. HIGH TO EXTRA HIGH WIND ZONE DOUBLE FIX UNDERFLASHINGS.
6. ALL DIMENSIONS SHOWN ON DRAWINGS ARE NOMINAL +/- 5mm

NOTES:

- These details are generally in compliance the NZ Metal Roof & Wall Cladding Code of Practice and in some cases specific details by 'Roofing Industries'. Eurostyle falls outsider the criteria of E2/AS1 and this document is therefore not applicable.
- The building designer is ultimatley responsible to ensure that details used meet the requirements of the NZ Building Code for the specific project.
- Details of the supporting structure including cavity battens are indicative only and are the responsibility of the building designer. For steel framed buildings thermal break cavity battens may be required.
- Underlay selection and building wrap types are the responsibility of the designer, Netting or other support is generally required at roof pitches less than 10 degrees combined with a self supporting paper. At roof pitches of 10° and above where non self supporting paper is used or purlin spacing is in excess of self supporting criteria, netting or other support should be used. Alternative support to netting should be used in severe coastal environments including when aluminium is used. (Refer to NZS 2295)
- These details are for Roofing Industries profile/s as nominated and may not be applicable to other profiles.
- This drawing is the copyright of 'Roofing Industries' and can only be copied or reproduced with their permission.
- These details to be read with Roofing Industries profile technical summary regarding wind loads and fixings.
- Further information can be obtained from the NZ Metal Roof & Wall Cladding Code of Practice: www.metalroofing.org.nz or E2/AS1.

Roofing Industries
roof.co.nz

EUROSTYLE SPANLOK™ ROOFING
PARALLEL APRON FLASHING (CAVITY) TYPE 2

Detail Number: RI-ES45R010BS-1A
Date drawn: 02/02/2018
Scale: 1 : 5@ A4

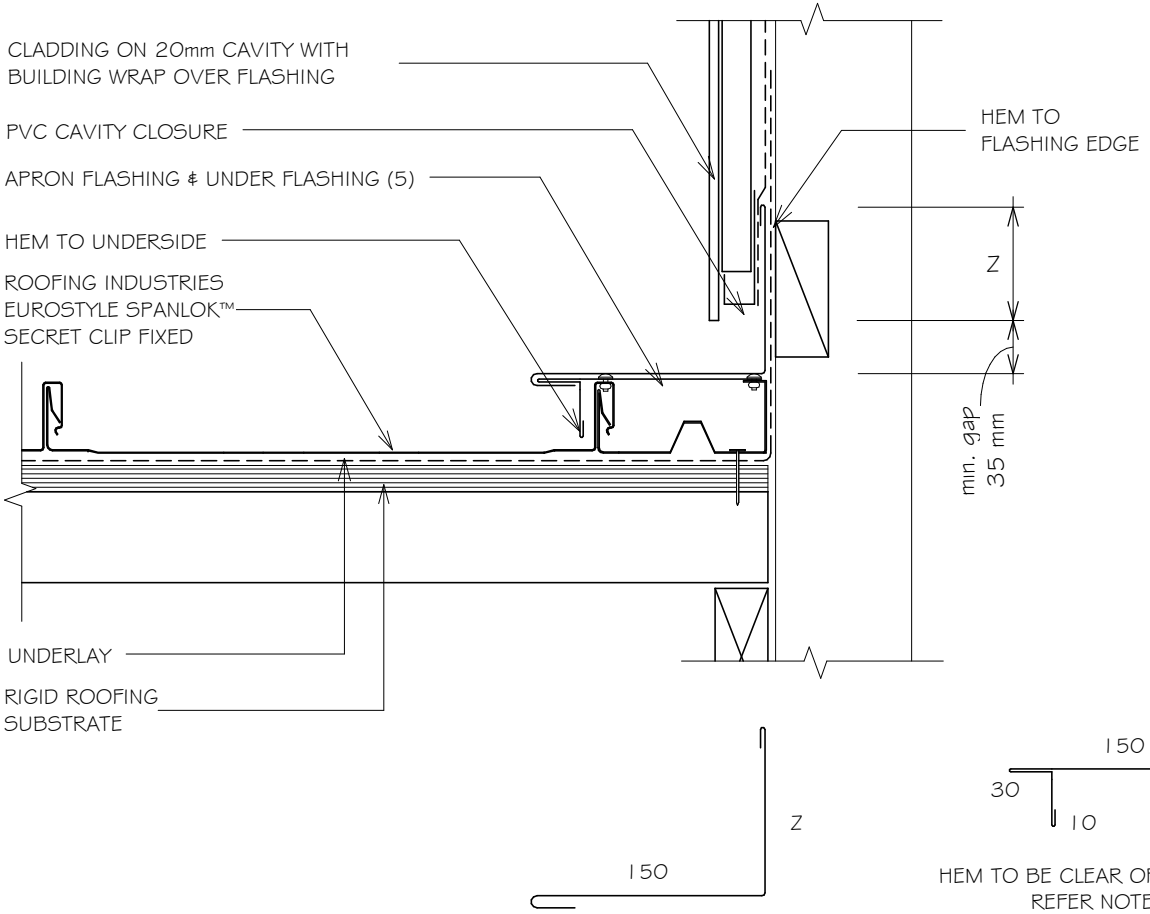

WIND ZONE	MINIMUM
	Z
SITUATION 1 (1)	75mm (3)
SITUATION 2 (2)	100mm (3)

NOTES:

DESIGNER TO ENSURE DURABILITY OF FLASHING MATERIAL;

1. SITUATION 1: IN LOW, MEDIUM OR HIGH WIND ZONES, WHERE ROOF PITCH IS 10° OR GREATER.
2. SITUATION 2: FOR ALL ROOF PITCHES IN VERY HIGH & EXTRA HIGH WIND ZONES, FOR ALL WIND ZONES WHERE ROOF PITCH IS LESS THAN 10°.
3. IF HEM IS NOT USED INCREASE DISTANCE BY 25mm.
4. ALLOW FOR SEPARATION FROM ANY CORROSIVE TIMBER TREATMENTS.
5. HIGH TO EXTRA HIGH WIND ZONE DOUBLE FIX UNDERFLASHINGS.
6. ALL DIMENSIONS SHOWN ON DRAWINGS ARE NOMINAL +/- 5mm

NOTES:

- These details are generally in compliance the NZ Metal Roof & Wall Cladding Code of Practice and in some cases specific details by 'Roofing Industries'. Eurostyle falls outsider the criteria of E2/AS1 and this document is therefore not applicable.
- The building designer is ultimatley responsible to ensure that details used meet the requirements of the NZ Building Code for the specific project.
- Details of the supporting structure including cavity battens are indicative only and are the responsibility of the building designer. For steel framed buildings thermal break cavity battens may be required.
- Underlay selection and building wrap types are the responsibility of the designer, Netting or other support is generally required at roof pitches less than 10 degrees combined with a self supporting paper. At roof pitches of 10° and above where non self supporting paper is used or purlin spacing is in excess of self supporting criteria, netting or other support should be used. Alternative support to netting should be used in severe coastal environments including when aluminium is used. (Refer to NZS 2295)
- These details are for Roofing Industries profile/s as nominated and may not be applicable to other profiles.
- This drawing is the copyright of 'Roofing Industries' and can only be copied or reproduced with their permission.
- These details to be read with Roofing Industries profile technical summary regarding wind loads and fixings.
- Further information can be obtained from the NZ Metal Roof & Wall Cladding Code of Practice: www.metalroofing.org.nz or E2/AS1.

Roofing Industries
roof.co.nz

EUROSTYLE SPANLOK™ ROOFING
TYPICAL APRON FLASHING (NON CAVITY) TYPE 1 - OPTION 2

Detail Number: RI-ES45R011AB
Date drawn: 02/02/2018
Scale: 1 : 5@ A4

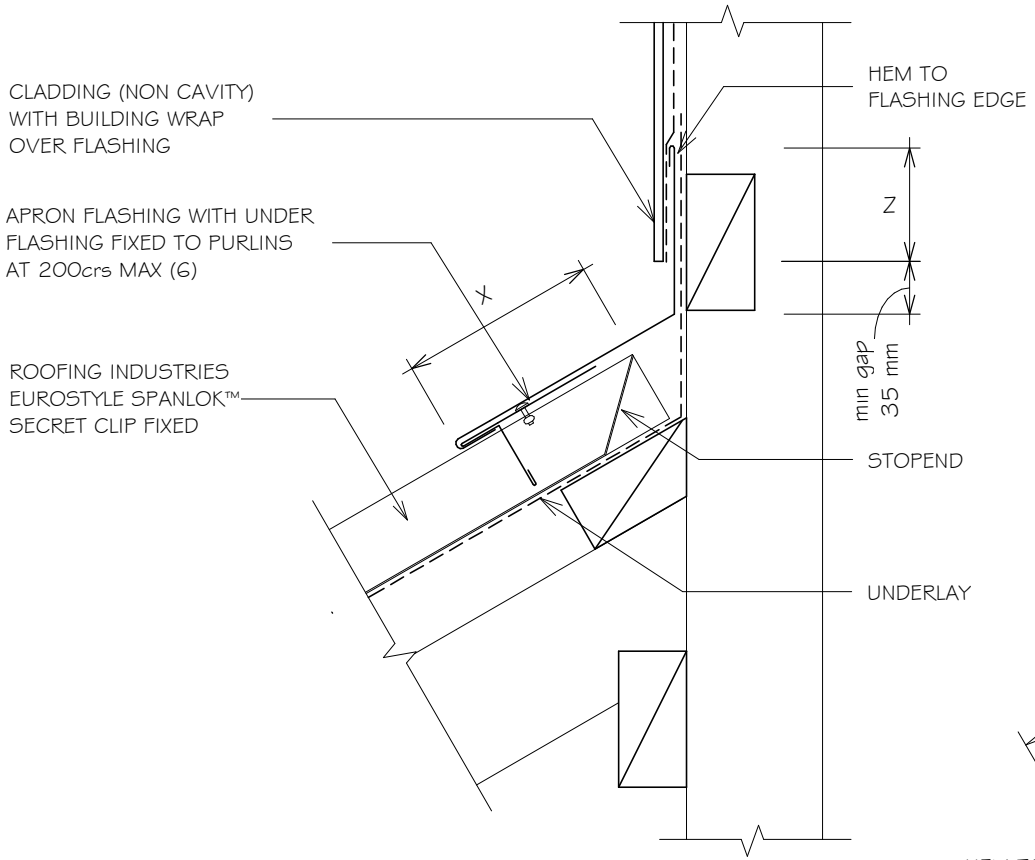

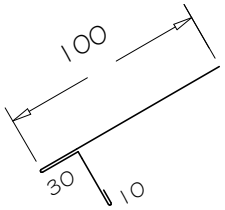

HEM TO BE CLEAR OF PAN 3-5mm

WIND ZONE	MINIMUM	
	Z	X
SITUATION 1 (1)	75mm (4)	130mm
SITUATION 2 (2)	90mm (4)	200mm
SITUATION 3 (3)	100mm (4)	200mm

NOTES:

DESIGNER TO ENSURE DURABILITY OF FLASHING MATERIAL;

1. SITUATION 1: IN LOW, MEDIUM OR HIGH WIND ZONES, WHERE ROOF PITCH IS 10° OR GREATER
2. SITUATION 2: FOR ALL ROOF PITCHES IN LOW, MEDIUM, HIGH, AND VERY HIGH WIND ZONES WHERE ROOF PITCH IS LESS THAN 10°.
3. SITUATION 3: FOR ALL ROOF PITCHES IN EXTRA HIGH WIND ZONE.
4. IF HEM IS NOT USED INCREASE DISTANCE BY 25mm.
5. ALLOW FOR SEPARATION FROM ANY CORROSIVE TIMBER TREATMENTS.
6. HIGH TO EXTRA HIGH WIND ZONE DOUBLE FIX UNDERFLASHINGS.
7. ALL DIMENSIONS SHOWN ON DRAWINGS ARE NOMINAL +/- 5mm

NOTES:

- These details are generally in compliance the NZ Metal Roof & Wall Cladding Code of Practice and in some cases specific details by 'Roofing Industries'. Eurostyle falls outsider the criteria of E2/AS1 and this document is therefore not applicable.
- The building designer is ultimatley responsible to ensure that details used meet the requirements of the NZ Building Code for the specific project.
- Details of the supporting structure including cavity battens are indicative only and are the responsibility of the building designer. For steel framed buildings thermal break cavity battens may be required.
- Underlay selection and building wrap types are the responsibility of the designer, Netting or other support is generally required at roof pitches less than 10 degrees combined with a self supporting paper. At roof pitches of 10° and above where non self supporting paper is used or purlin spacing is in excess of self supporting criteria, netting or other support should be used. Alternative support to netting should be used in severe coastal environments including when aluminium is used. (Refer to NZS 2295)
- These details are for Roofing Industries profile/s as nominated and may not be applicable to other profiles.
- This drawing is the copyright of 'Roofing Industries' and can only be copied or reproduced with their permission.
- These details to be read with Roofing Industries profile technical summary regarding wind loads and fixings.
- Further information can be obtained from the NZ Metal Roof & Wall Cladding Code of Practice: www.metalroofing.org.nz or E2/AS1.

Roofing Industries
roof.co.nz

EUROSTYLE SPANLOK™ ROOFING

TYPICAL APRON FLASHING (NON CAVITY) TYPE 1

Detail Number: RI-ES45R011ABS

Date drawn: 02/02/2018

Scale: 1 : 5@ A4

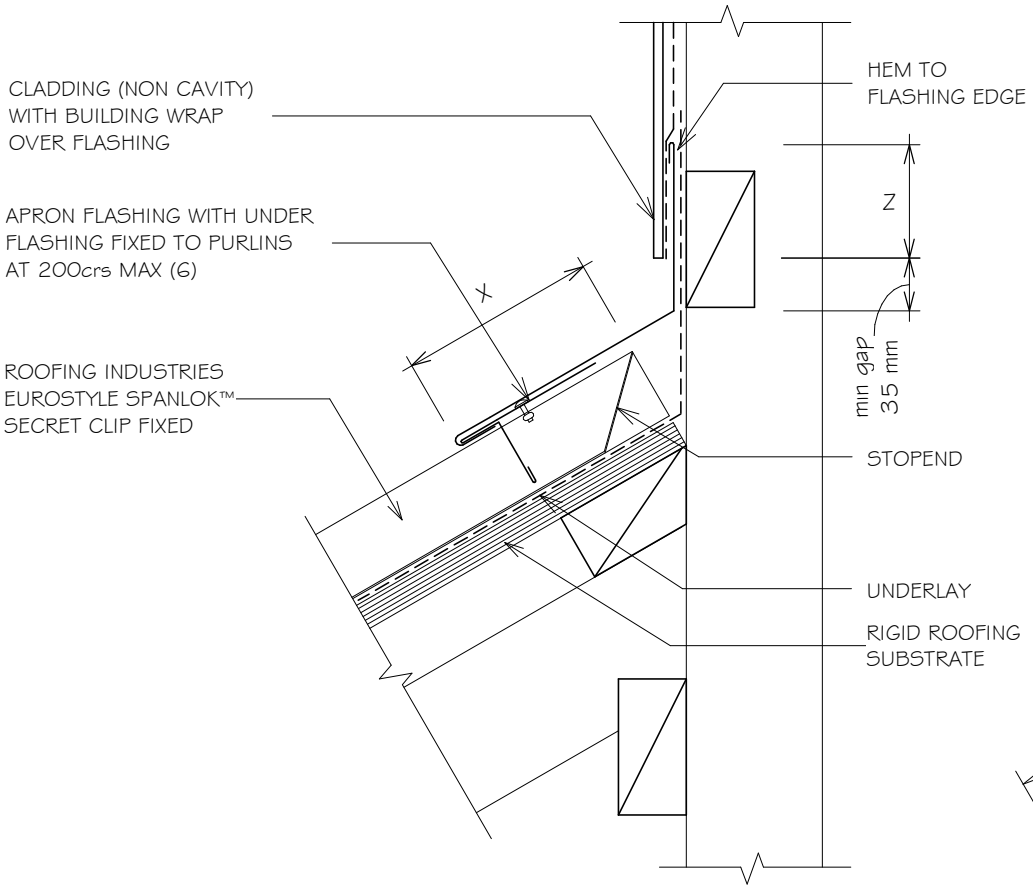

WIND ZONE	MINIMUM	
	Z	X
SITUATION 1 (1)	75mm (4)	130mm
SITUATION 2 (2)	90mm (4)	200mm
SITUATION 3 (3)	100mm (4)	200mm

NOTES:

DESIGNER TO ENSURE DURABILITY OF FLASHING MATERIAL;

1. SITUATION 1: IN LOW, MEDIUM OR HIGH WIND ZONES, WHERE ROOF PITCH IS 10° OR GREATER
2. SITUATION 2: FOR ALL ROOF PITCHES IN LOW, MEDIUM, HIGH, AND VERY HIGH WIND ZONES WHERE ROOF PITCH IS LESS THAN 10°.
3. SITUATION 3: FOR ALL ROOF PITCHES IN EXTRA HIGH WIND ZONE.
4. IF HEM IS NOT USED INCREASE DISTANCE BY 25mm.
5. ALLOW FOR SEPARATION FROM ANY CORROSIVE TIMBER TREATMENTS.
6. HIGH TO EXTRA HIGH WIND ZONE DOUBLE FIX UNDERFLASHINGS.
7. ALL DIMENSIONS SHOWN ON DRAWINGS ARE NOMINAL +/- 5mm

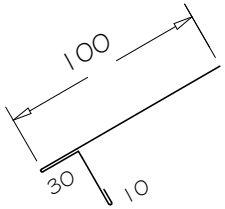

HEM TO BE CLEAR OF PAN 3-5mm

NOTES:

- These details are generally in compliance the NZ Metal Roof & Wall Cladding Code of Practice and in some cases specific details by 'Roofing Industries'. Eurostyle falls outsider the criteria of E2/AS1 and this document is therefore not applicable.
- The building designer is ultimatley responsible to ensure that details used meet the requirements of the NZ Building Code for the specific project.
- Details of the supporting structure including cavity battens are indicative only and are the responsibility of the building designer. For steel framed buildings thermal break cavity battens may be required.
- Underlay selection and building wrap types are the responsibility of the designer, Netting or other support is generally required at roof pitches less than 10 degrees combined with a self supporting paper. At roof pitches of 10° and above where non self supporting paper is used or purlin spacing is in excess of self supporting criteria, netting or other support should be used. Alternative support to netting should be used in severe coastal environments including when aluminium is used. (Refer to NZS 2295)
- These details are for Roofing Industries profile/s as nominated and may not be applicable to other profiles.
- This drawing is the copyright of 'Roofing Industries' and can only be copied or reproduced with their permission.
- These details to be read with Roofing Industries profile technical summary regarding wind loads and fixings.
- Further information can be obtained from the NZ Metal Roof & Wall Cladding Code of Practice: www.metalroofing.org.nz or E2/AS1.

Roofing Industries
roof.co.nz

EUROSTYLE SPANLOK™ ROOFING
TYPICAL APRON FLASHING (NON CAVITY) TYPE 2

Detail Number: RI-ES45R011AS
Date drawn: 02/02/2018
Scale: 1 : 5@ A4

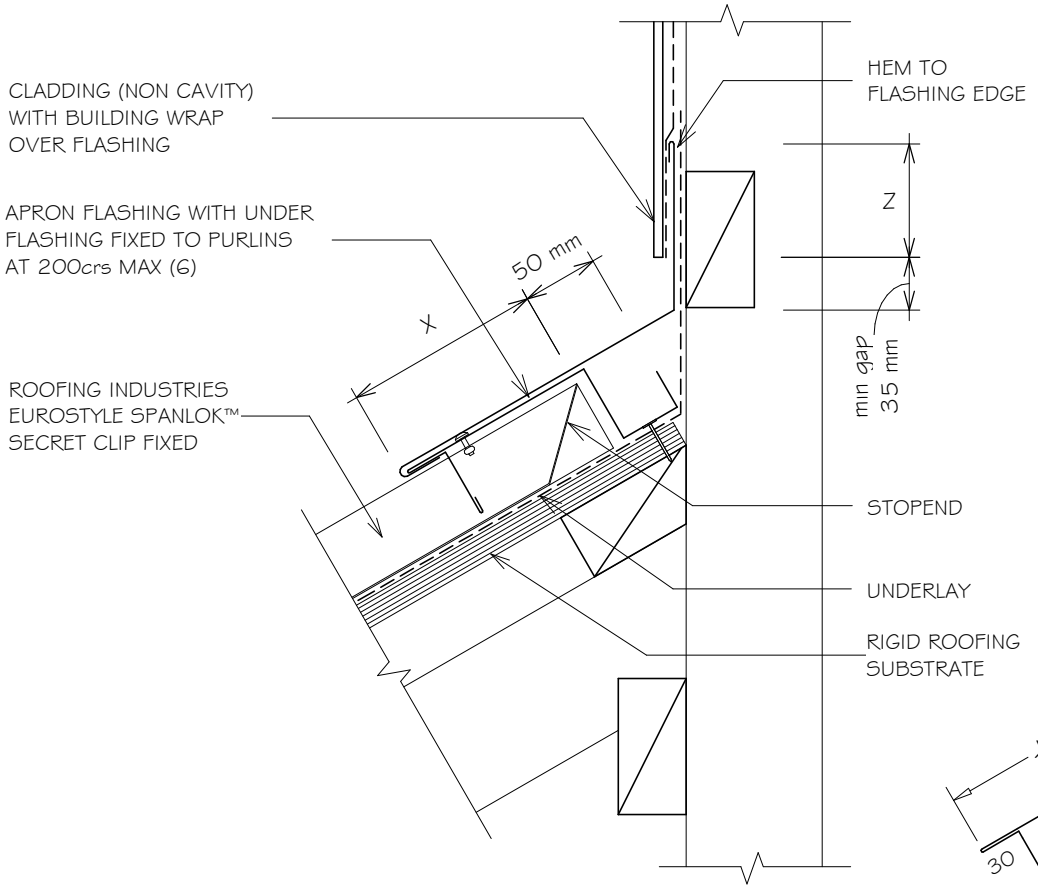

WIND ZONE	MINIMUM	
	Z	X
SITUATION 1 (1)	75mm (4)	130mm
SITUATION 2 (2)	90mm (4)	200mm
SITUATION 3 (3)	100mm (4)	200mm

NOTES:

DESIGNER TO ENSURE DURABILITY OF FLASHING MATERIAL;

1. SITUATION 1: IN LOW, MEDIUM OR HIGH WIND ZONES, WHERE ROOF PITCH IS 10° OR GREATER
2. SITUATION 2: FOR ALL ROOF PITCHES IN LOW, MEDIUM, HIGH, AND VERY HIGH WIND ZONES WHERE ROOF PITCH IS LESS THAN 10°.
3. SITUATION 3: FOR ALL ROOF PITCHES IN EXTRA HIGH WIND ZONE.
4. IF HEM IS NOT USED INCREASE DISTANCE BY 25mm.
5. ALLOW FOR SEPARATION FROM ANY CORROSIVE TIMBER TREATMENTS.
6. HIGH TO EXTRA HIGH WIND ZONE DOUBLE FIX UNDERFLASHINGS.
7. ALL DIMENSIONS SHOWN ON DRAWINGS ARE NOMINAL +/- 5mm

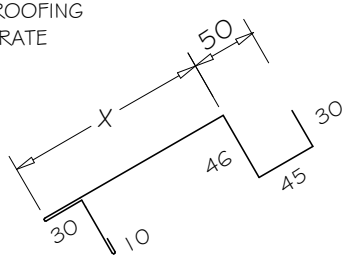

HEM TO BE CLEAR OF PAN 3-5mm

NOTES:

- These details are generally in compliance the NZ Metal Roof & Wall Cladding Code of Practice and in some cases specific details by 'Roofing Industries'. Eurostyle falls outsider the criteria of E2/AS1 and this document is therefore not applicable.
- The building designer is ultimatley responsible to ensure that details used meet the requirements of the NZ Building Code for the specific project.
- Details of the supporting structure including cavity battens are indicative only and are the responsibility of the building designer. For steel framed buildings thermal break cavity battens may be required.
- Underlay selection and building wrap types are the responsibility of the designer, Netting or other support is generally required at roof pitches less than 10 degrees combined with a self supporting paper. At roof pitches of 10° and above where non self supporting paper is used or purlin spacing is in excess of self supporting criteria, netting or other support should be used. Alternative support to netting should be used in severe coastal environments including when aluminium is used. (Refer to NZS 2295)
- These details are for Roofing Industries profile/s as nominated and may not be applicable to other profiles.
- This drawing is the copyright of 'Roofing Industries' and can only be copied or reproduced with their permission.
- These details to be read with Roofing Industries profile technical summary regarding wind loads and fixings.
- Further information can be obtained from the NZ Metal Roof & Wall Cladding Code of Practice: www.metalroofing.org.nz or E2/AS1.

Roofing Industries
roof.co.nz

EUROSTYLE SPANLOK™ ROOFING
TYPICAL APRON FLASHING (CAVITY) TYPE 1

Detail Number: RI-ES45R011BS
Date drawn: 02/02/2018
Scale: 1 : 5@ A4

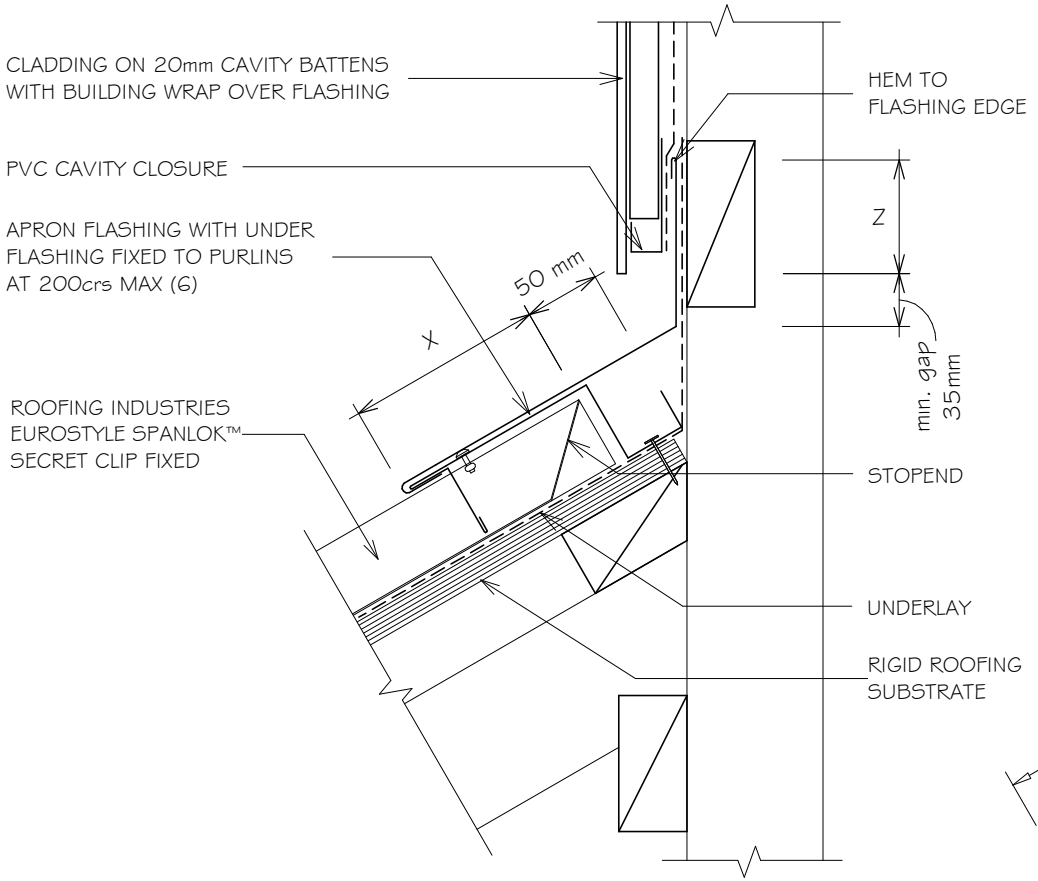

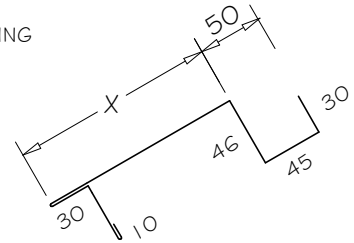

HEM TO BE CLEAR OF PAN 3-5mm

WIND ZONE	MINIMUM	
	Z	X
SITUATION 1 (1)	75mm (4)	130mm
SITUATION 2 (2)	90mm (4)	200mm
SITUATION 3 (3)	100mm (4)	200mm

NOTES:

DESIGNER TO ENSURE DURABILITY OF FLASHING MATERIAL;

1. SITUATION 1: IN LOW, MEDIUM OR HIGH WIND ZONES, WHERE ROOF PITCH IS 10° OR GREATER
2. SITUATION 2: FOR ALL ROOF PITCHES IN LOW, MED, HIGH AND VERY HIGH WIND ZONES WHERE ROOF PITCH IS LESS THAN 10°.
3. SITUATION 3: FOR ALL ROOF PITCHES IN EXTRA HIGH WIND ZONE.
4. IF HEM IS NOT USED INCREASE DISTANCE BY 25mm.
5. ALLOW FOR SEPARATION FROM ANY CORROSIVE TIMBER TREATMENTS.
6. HIGH TO EXTRA HIGH WIND ZONE DOUBLE FIX UNDERFLASHINGS.
7. ALL DIMENSIONS SHOWN ON DRAWINGS ARE NOMINAL +/- 5mm

NOTES:

- These details are generally in compliance the NZ Metal Roof & Wall Cladding Code of Practice and in some cases specific details by 'Roofing Industries'. Eurostyle falls outsider the criteria of E2/AS1 and this document is therefore not applicable.
- The building designer is ultimatley responsible to ensure that details used meet the requirements of the NZ Building Code for the specific project.
- Details of the supporting structure including cavity battens are indicative only and are the responsibility of the building designer. For steel framed buildings thermal break cavity battens may be required.
- Underlay selection and building wrap types are the responsibility of the designer, Netting or other support is generally required at roof pitches less than 10 degrees combined with a self supporting paper. At roof pitches of 10° and above where non self supporting paper is used or purlin spacing is in excess of self supporting criteria, netting or other support should be used. Alternative support to netting should be used in severe coastal environments including when aluminium is used. (Refer to NZS 2295)
- These details are for Roofing Industries profile/s as nominated and may not be applicable to other profiles.
- This drawing is the copyright of 'Roofing Industries' and can only be copied or reproduced with their permission.
- These details to be read with Roofing Industries profile technical summary regarding wind loads and fixings.
- Further information can be obtained from the NZ Metal Roof & Wall Cladding Code of Practice: www.metalroofing.org.nz or E2/AS1.

Roofing Industries
roof.co.nz

EUROSTYLE SPANLOK™ ROOFING
PENETRATION FLASHING DETAILS

Detail Number: RI-ES45R080A
Date drawn: 02/02/2018
Scale: 1 : 5@ A2

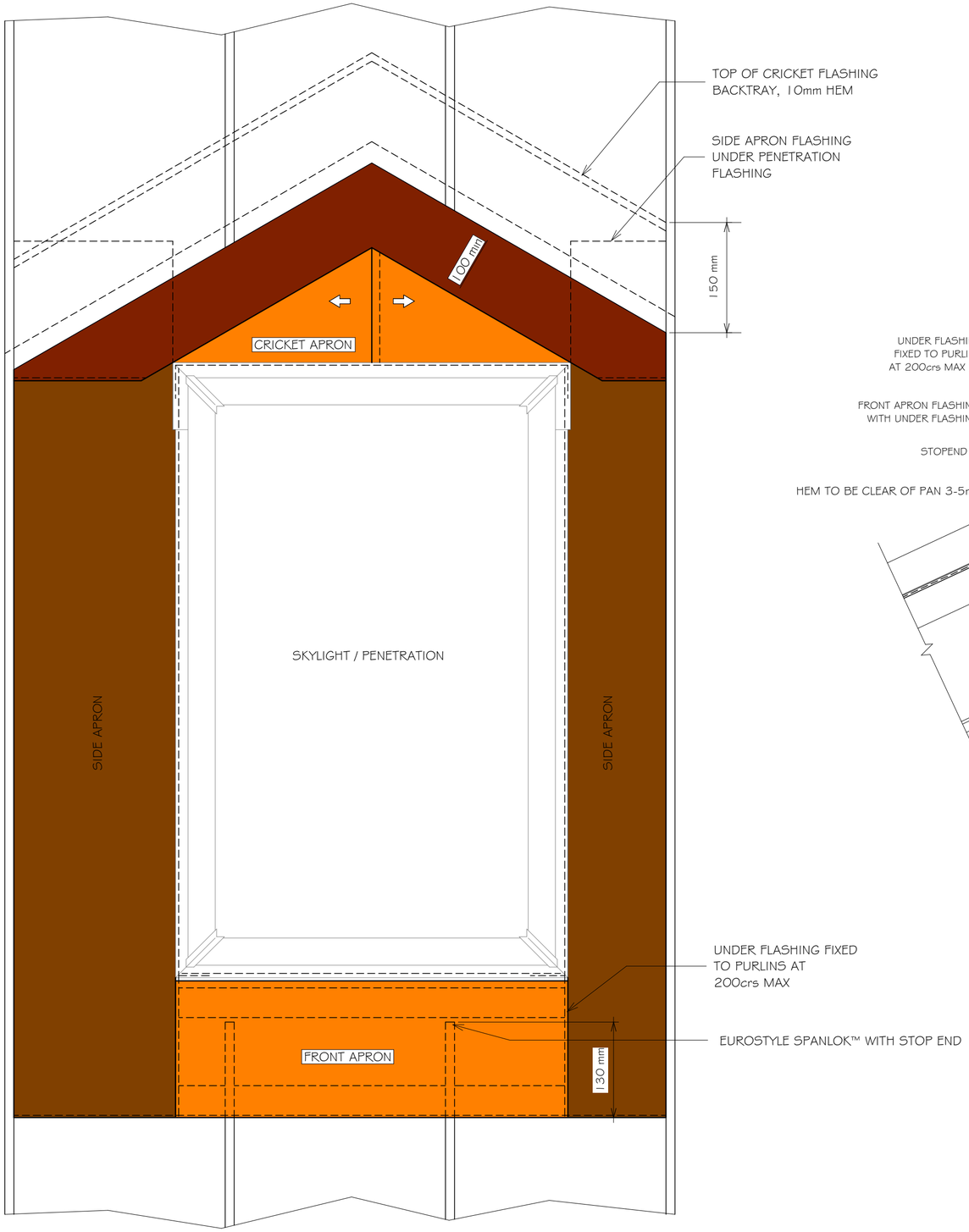

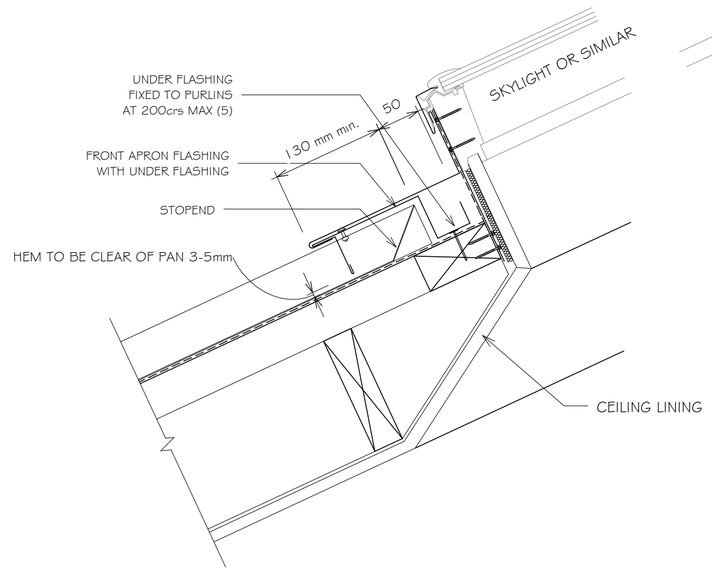

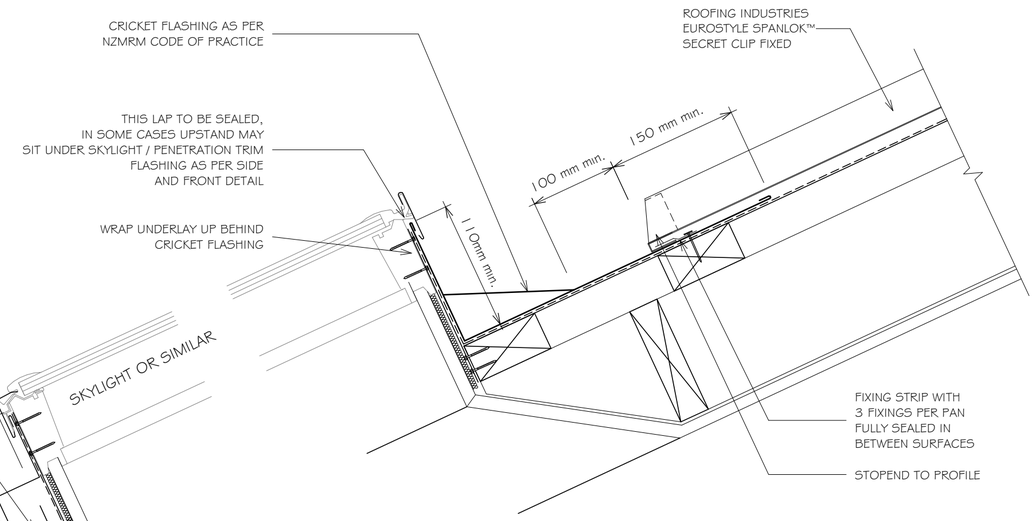

NOTE:

1. REFER TO NZMRM CODE OF PRACTICE FOR CATCHMENT AREA LIMITATIONS.
2. REFER TO NZMRM CODE OF PRACTICE FOR FURTHER INFORMATION.
3. REFER TO SKYLIGHT MANUFACTURERS DETAILS AS SOME LOW PITCH INSTALLATIONS REQUIRE MODIFICATIONS TO THESE DETAILS.
4. SKYLIGHT MOUNTING BRACKETS ARE INDICATIVE ONLY AND DIFFERENT SKYLIGHTS / PENETRATIONS MAY REQUIRE DIFFERENT FRAMING, MOUNTING AND FLASHING DETAILS.
5. HIGH TO EXTRA HIGH WIND ZONE DOUBLE RIVET.
6. ALLOW FOR SEPARATION FROM ANY CORROSIVE TIMBER TREATMENTS.
7. ALL DIMENSIONS SHOWN ON DRAWINGS ARE NOMINAL +/- 5mm

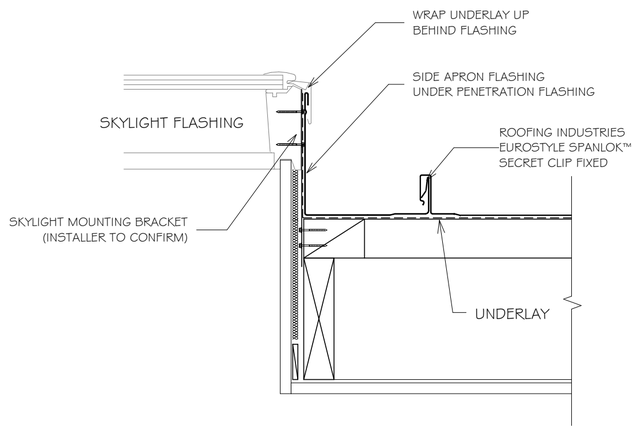

NOTES:

- These details are generally in compliance the NZ Metal Roof & Wall Cladding Code of Practice and in some cases specific details by 'Roofing Industries'. Eurostyle falls outsider the criteria of E2/AS1 and this document is therefore not applicable.
- The building designer is ultimatley responsible to ensure that details used meet the requirements of the NZ Building Code for the specific project.
- Details of the supporting structure including cavity battens are indicative only and are the responsibility of the building designer. For steel framed buildings thermal break cavity battens may be required.
- Underlay selection and building wrap types are the responsibility of the designer, Netting or other support is generally required at roof pitches less than 8 degrees combined with a self supporting paper. At roof pitches of 8° and above where non self supporting paper is used or purlin spacing is in excess of self supporting criteria, netting or other support should be used. Alternative support to netting should be used in severe coastal environments including when aluminium is used.
- These details are for Roofing Industries profile/s as nominated and may not be applicable to other profiles.
- This drawing is the copyright of 'Roofing Industries' and can only be copied or reproduced with their permission.
- These details to be read with Roofing Industries profile technical summary regarding wind loads and fixings.
- Further information can be obtained from the NZ Metal Roof & Wall Cladding Code of Practice: www.metalroofing.org.nz or E2/AS1.

Roofing Industries
roof.co.nz

EUROSTYLE SPANLOK™ ROOFING PENETRATION FLASHING DETAILS

Detail Number: RI-ES45R080A-1
Date drawn: 02/02/2018
Scale: 1 : 5@ A2

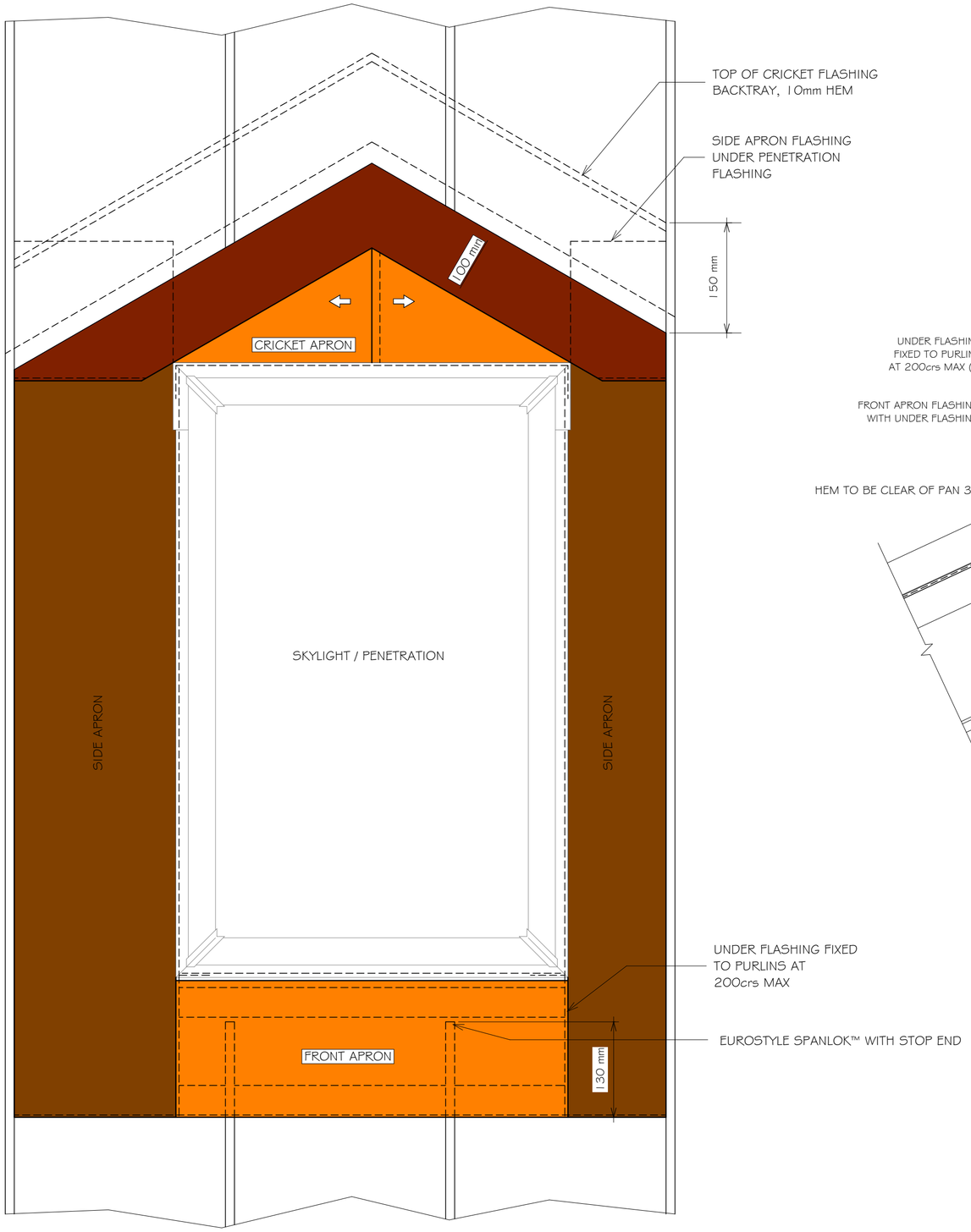

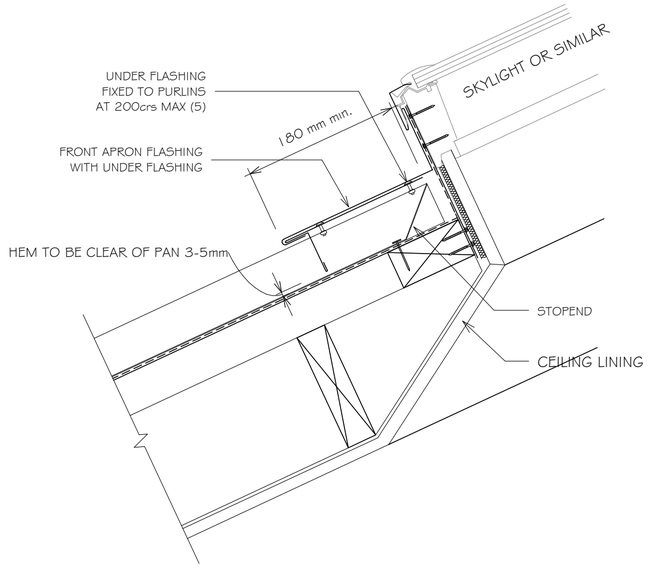

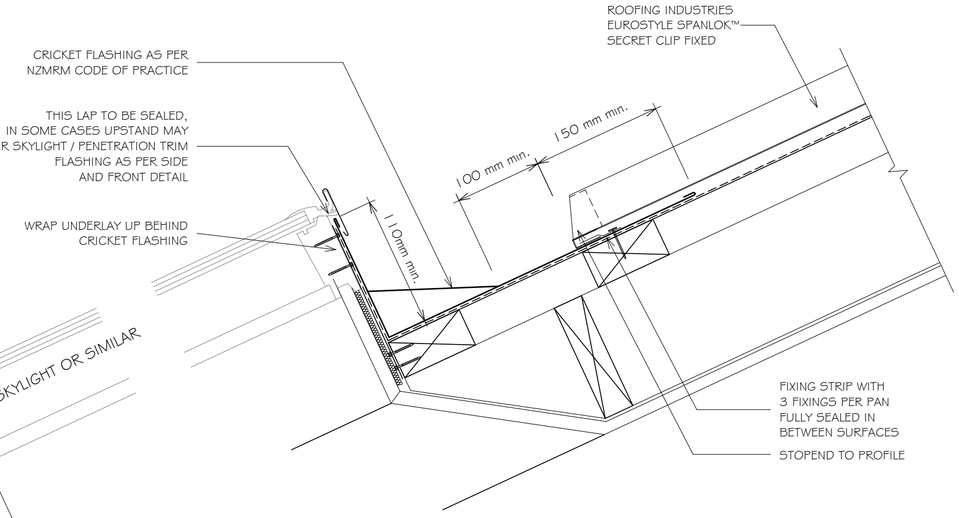

NOTE:

1. REFER TO NZMRM CODE OF PRACTICE FOR CATCHMENT AREA LIMITATIONS.
2. REFER TO NZMRM CODE OF PRACTICE FOR FURTHER INFORMATION.
3. REFER TO SKYLIGHT MANUFACTURERS DETAILS AS SOME LOW PITCH INSTALLATIONS REQUIRE MODIFICATIONS TO THESE DETAILS.
4. SKYLIGHT MOUNTING BRACKETS ARE INDICATIVE ONLY AND DIFFERENT SKYLIGHTS / PENETRATIONS MAY REQUIRE DIFFERENT FRAMING, MOUNTING AND FLASHING DETAILS.
5. HIGH TO EXTRA HIGH WIND ZONE DOUBLE RIVET.
6. ALLOW FOR SEPARATION FROM ANY CORROSIVE TIMBER TREATMENTS.
7. ALL DIMENSIONS SHOWN ON DRAWINGS ARE NOMINAL +/- 5mm

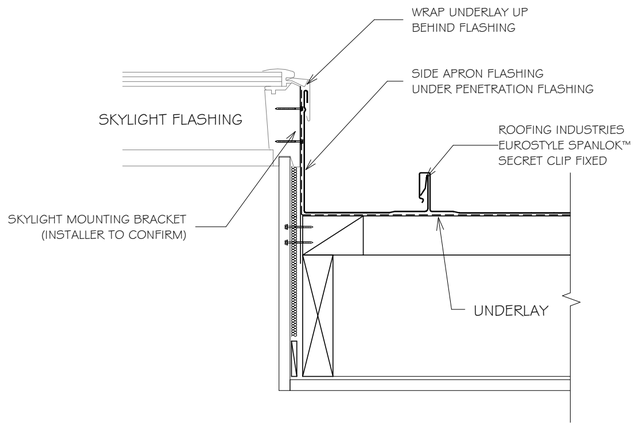

NOTES:

- These details are generally in compliance the NZ Metal Roof & Wall Cladding Code of Practice and in some cases specific details by 'Roofing Industries'. Eurostyle falls outsider the criteria of E2/AS1 and this document is therefore not applicable.
- The building designer is ultimatley responsible to ensure that details used meet the requirements of the NZ Building Code for the specific project.
- Details of the supporting structure including cavity battens are indicative only and are the responsibility of the building designer. For steel framed buildings thermal break cavity battens may be required.
- Underlay selection and building wrap types are the responsibility of the designer, Netting or other support is generally required at roof pitches less than 8 degrees combined with a self supporting paper. At roof pitches of 8° and above where non self supporting paper is used or purlin spacing is in excess of self supporting criteria, netting or other support should be used. Alternative support to netting should be used in severe coastal environments including when aluminium is used.
- These details are for Roofing Industries profile/s as nominated and may not be applicable to other profiles.
- This drawing is the copyright of 'Roofing Industries' and can only be copied or reproduced with their permission.
- These details to be read with Roofing Industries profile technical summary regarding wind loads and fixings.
- Further information can be obtained from the NZ Metal Roof & Wall Cladding Code of Practice: www.metalroofing.org.nz or E2/AS1.

Roofing Industries
roof.co.nz

EUROSTYLE SPANLOK™ ROOFING
PENETRATION FLASHING DETAILS

Detail Number: RI-ES45R080AS
Date drawn: 02/02/2018
Scale: 1 : 5@ A2

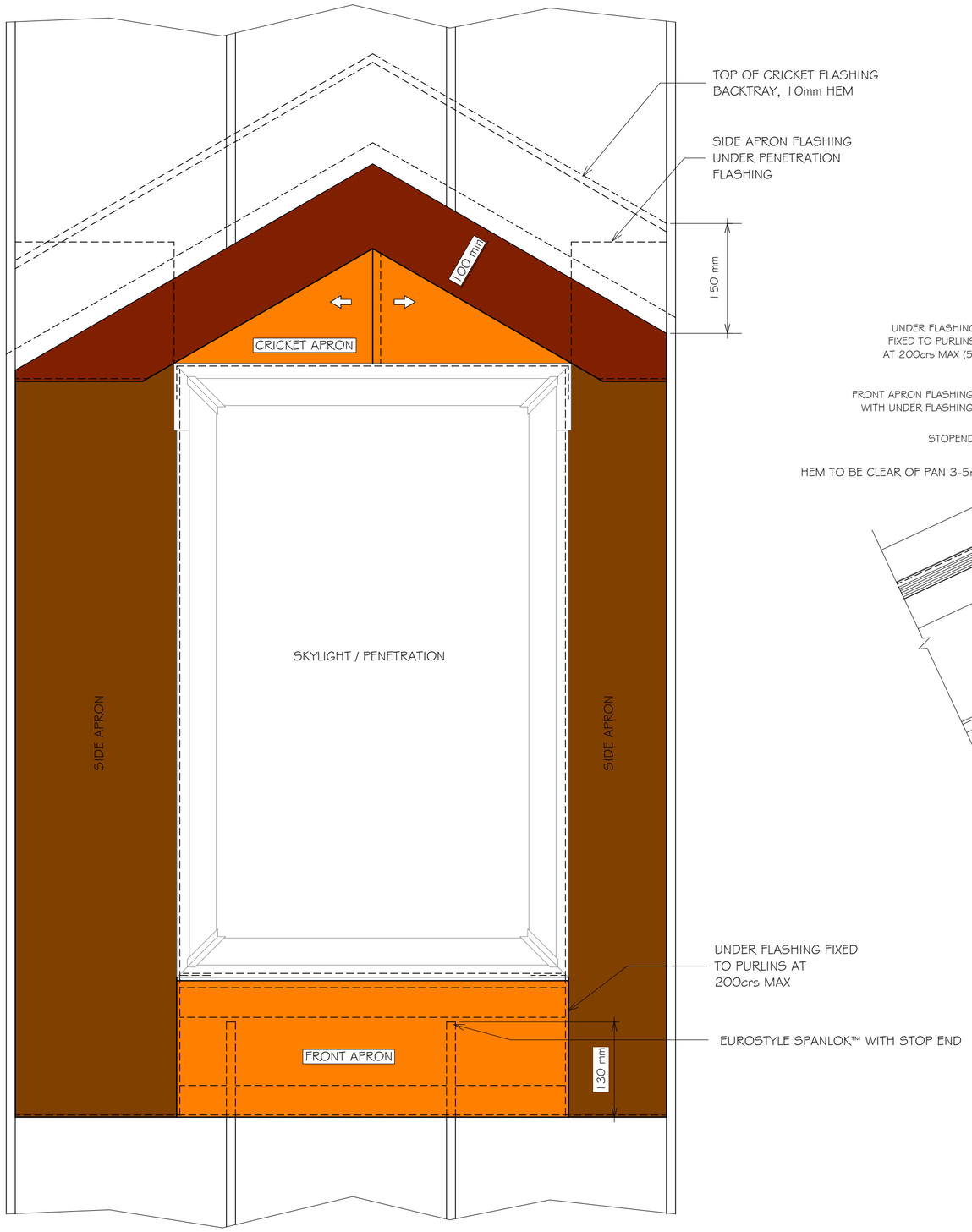

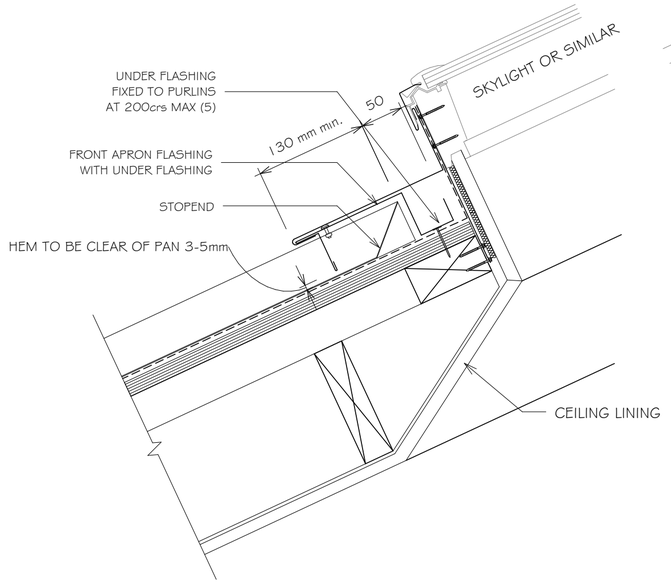

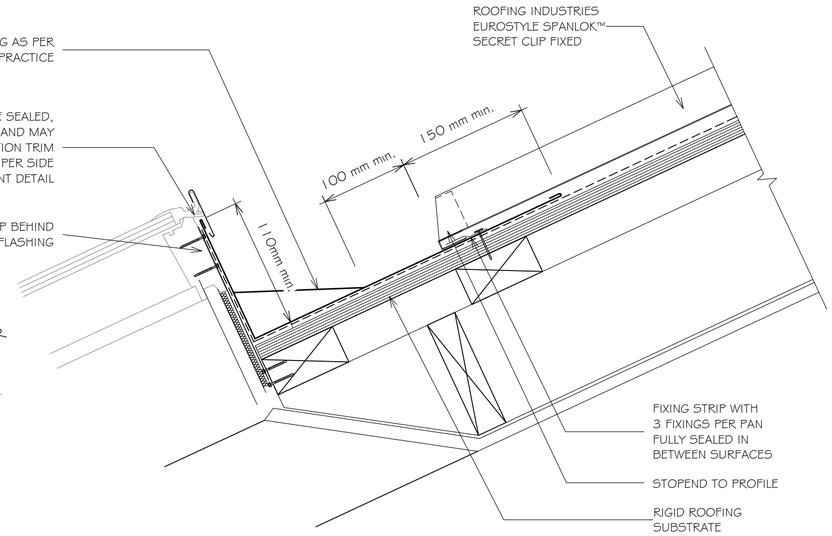

NOTE:

1. REFER TO NZMRM CODE OF PRACTICE FOR CATCHMENT AREA LIMITATIONS.
2. REFER TO NZMRM CODE OF PRACTICE FOR FURTHER INFORMATION.
3. REFER TO SKYLIGHT MANUFACTURERS DETAILS AS SOME LOW PITCH INSTALLATIONS REQUIRE MODIFICATIONS TO THESE DETAILS.
4. SKYLIGHT MOUNTING BRACKETS ARE INDICATIVE ONLY AND DIFFERENT SKYLIGHTS / PENETRATIONS MAY REQUIRE DIFFERENT FRAMING, MOUNTING AND FLASHING DETAILS.
5. HIGH TO EXTRA HIGH WIND ZONE DOUBLE RIVET.
6. ALLOW FOR SEPARATION FROM ANY CORROSIVE TIMBER TREATMENTS.
7. ALL DIMENSIONS SHOWN ON DRAWINGS ARE NOMINAL +/- 5mm

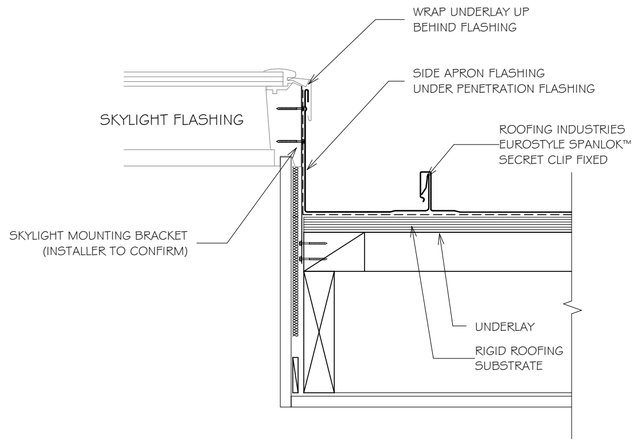

NOTES:

- These details are generally in compliance the NZ Metal Roof & Wall Cladding Code of Practice and in some cases specific details by 'Roofing Industries'. Eurostyle falls outsider the criteria of E2/AS1 and this document is therefore not applicable.
- The building designer is ultimatley responsible to ensure that details used meet the requirements of the NZ Building Code for the specific project.
- Details of the supporting structure including cavity battens are indicative only and are the responsibility of the building designer. For steel framed buildings thermal break cavity battens may be required.
- Underlay selection and building wrap types are the responsibility of the designer, Netting or other support is generally required at roof pitches less than 8 degrees combined with a self supporting paper. At roof pitches of 8° and above where non self supporting paper is used or purlin spacing is in excess of self supporting criteria, netting or other support should be used. Alternative support to netting should be used in severe coastal environments including when aluminium is used.
- These details are for Roofing Industries profile/s as nominated and may not be applicable to other profiles.
- This drawing is the copyright of 'Roofing Industries' and can only be copied or reproduced with their permission.
- These details to be read with Roofing Industries profile technical summary regarding wind loads and fixings.
- Further information can be obtained from the NZ Metal Roof & Wall Cladding Code of Practice: www.metalroofing.org.nz or E2/AS1.

Roofing Industries
roof.co.nz

EUROSTYLE SPANLOK™ ROOFING
PENETRATION FLASHING DETAILS

Detail Number: RI-ES45R080AS-1
Date drawn: 02/02/2018
Scale: 1 : 5@ A2

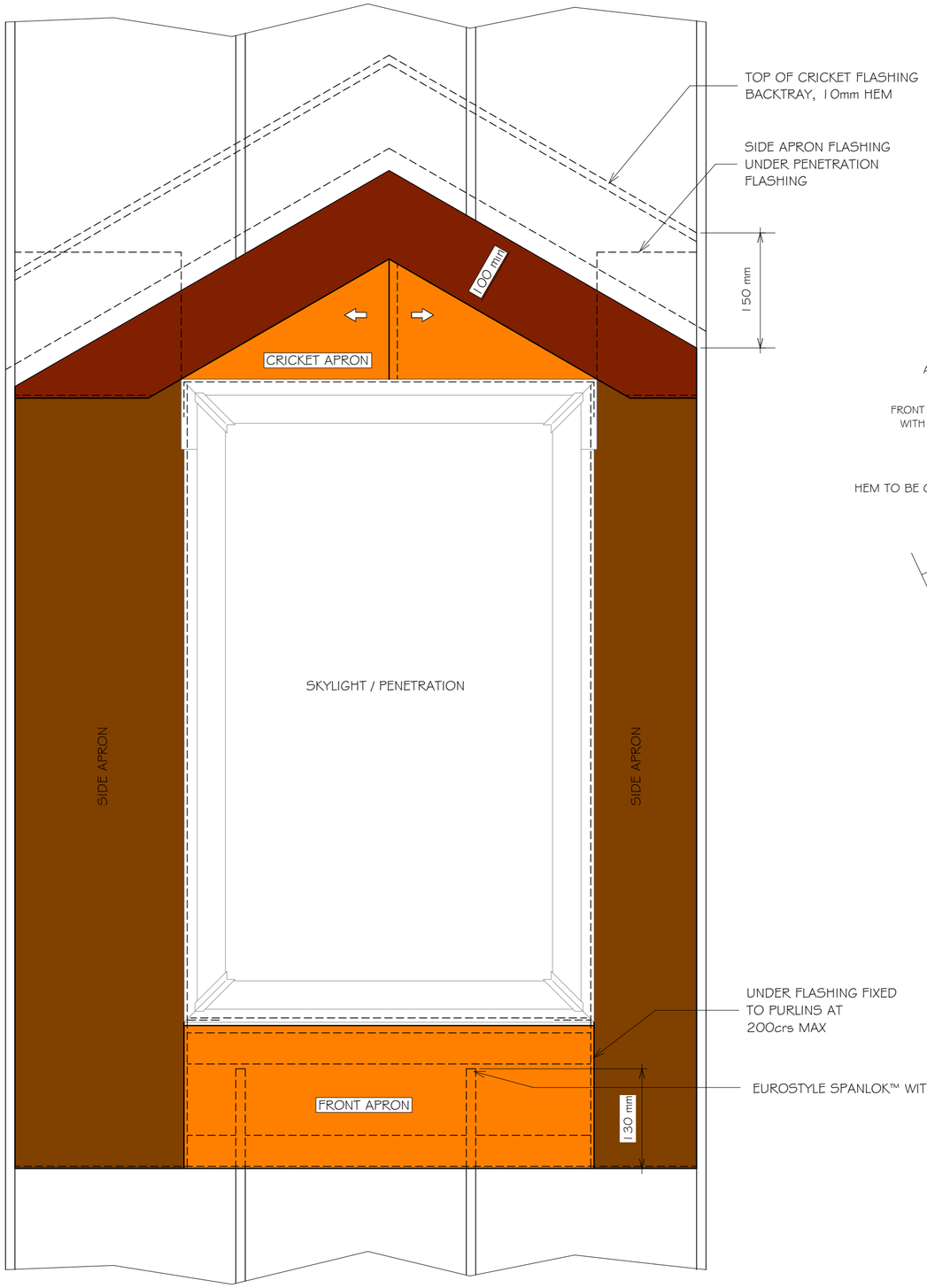

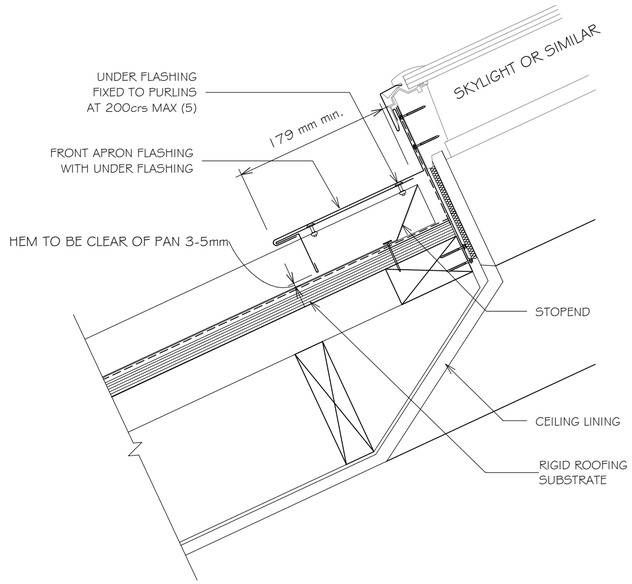

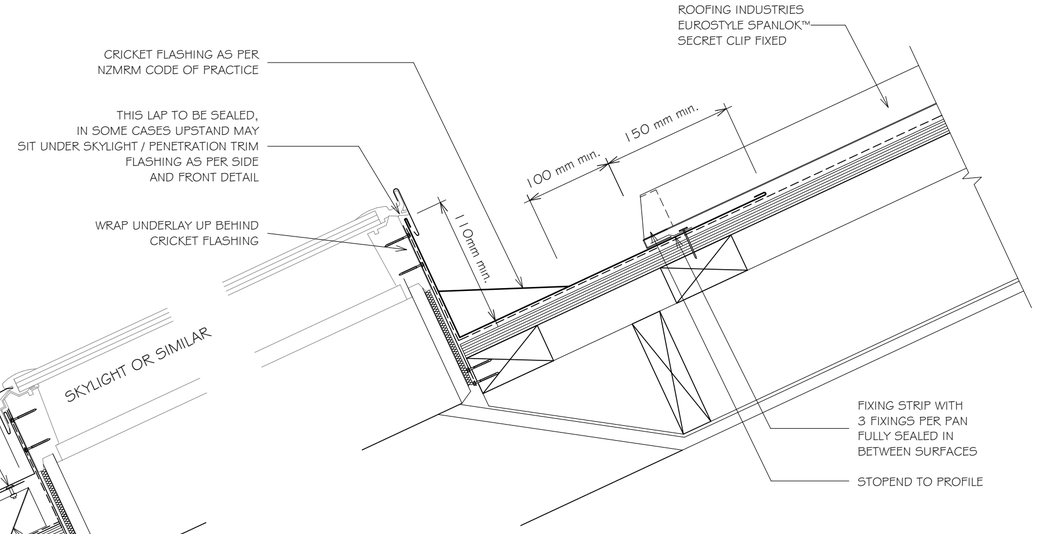

NOTE:

1. REFER TO NZMRM CODE OF PRACTICE FOR CATCHMENT AREA LIMITATIONS.
2. REFER TO NZMRM CODE OF PRACTICE FOR FURTHER INFORMATION.
3. REFER TO SKYLIGHT MANUFACTURERS DETAILS AS SOME LOW PITCH INSTALLATIONS REQUIRE MODIFICATIONS TO THESE DETAILS.
4. SKYLIGHT MOUNTING BRACKETS ARE INDICATIVE ONLY AND DIFFERENT SKYLIGHTS / PENETRATIONS MAY REQUIRE DIFFERENT FRAMING, MOUNTING AND FLASHING DETAILS.
5. HIGH TO EXTRA HIGH WIND ZONE DOUBLE RIVET.
6. ALLOW FOR SEPARATION FROM ANY CORROSIVE TIMBER TREATMENTS.
7. ALL DIMENSIONS SHOWN ON DRAWINGS ARE NOMINAL +/- 5mm

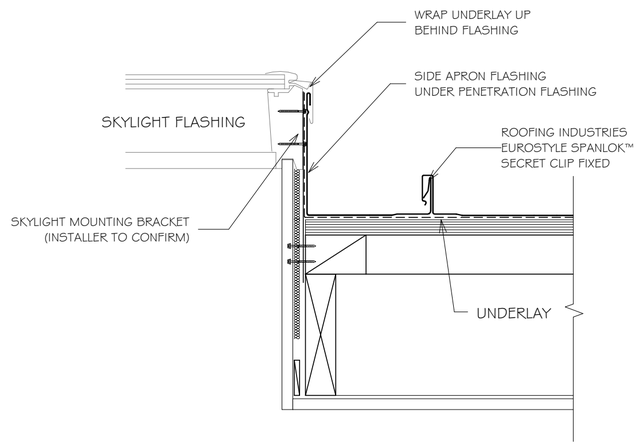

NOTES:

- These details are generally in compliance the NZ Metal Roof & Wall Cladding Code of Practice and in some cases specific details by 'Roofing Industries'. Eurostyle falls outsider the criteria of E2/AS1 and this document is therefore not applicable.
- The building designer is ultimatley responsible to ensure that details used meet the requirements of the NZ Building Code for the specific project.
- Details of the supporting structure including cavity battens are indicative only and are the responsibility of the building designer. For steel framed buildings thermal break cavity battens may be required.
- Underlay selection and building wrap types are the responsibility of the designer, Netting or other support is generally required at roof pitches less than 8 degrees combined with a self supporting paper. At roof pitches of 8° and above where non self supporting paper is used or purlin spacing is in excess of self supporting criteria, netting or other support should be used. Alternative support to netting should be used in severe coastal environments including when aluminium is used.
- These details are for Roofing Industries profile/s as nominated and may not be applicable to other profiles.
- This drawing is the copyright of 'Roofing Industries' and can only be copied or reproduced with their permission.
- These details to be read with Roofing Industries profile technical summary regarding wind loads and fixings.
- Further information can be obtained from the NZ Metal Roof & Wall Cladding Code of Practice: www.metalroofing.org.nz or E2/AS1.

Roofing Industries
roof.co.nz

EUROSTYLE SPANLOK™ ROOFING
PENETRATION FLASHING CROSS SECTION

Detail Number: RI-ES45R081A
Date drawn: 02/02/2018
Scale: 1 : 5@ A3

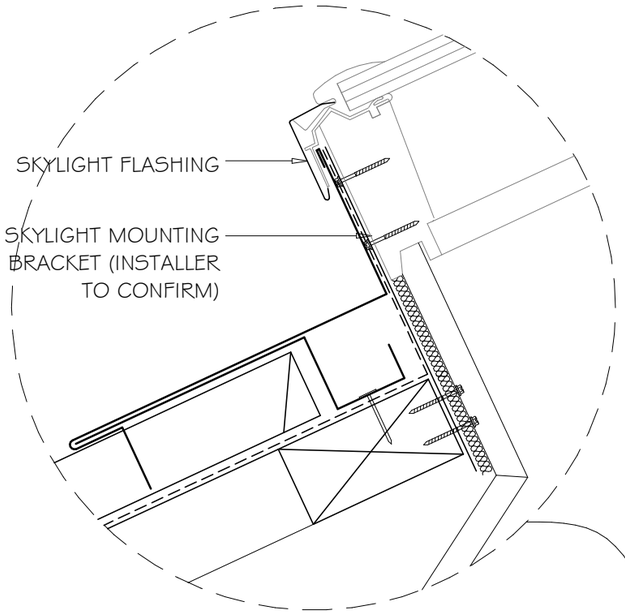

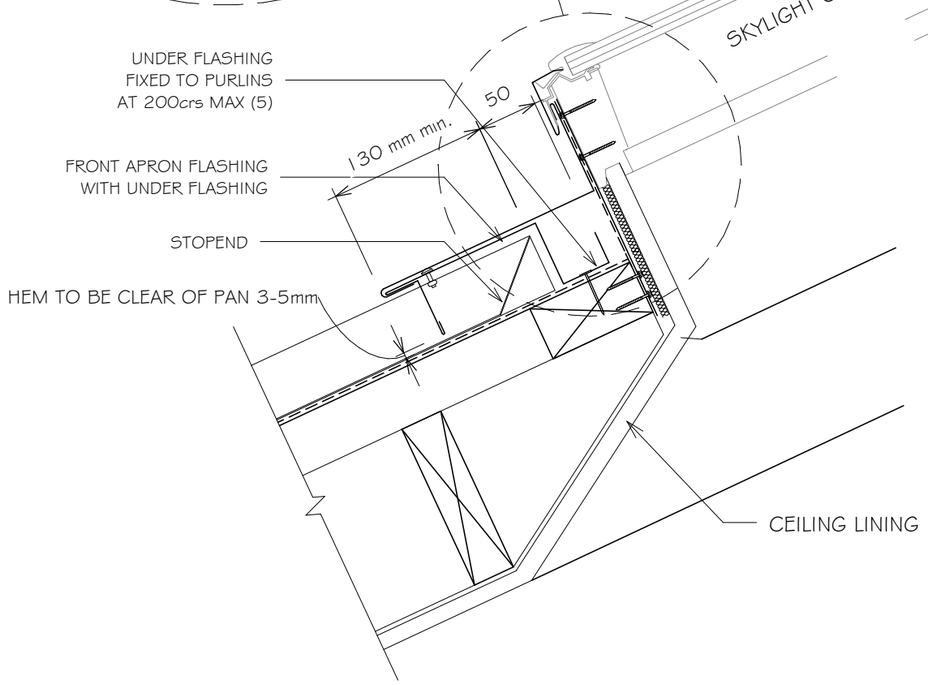

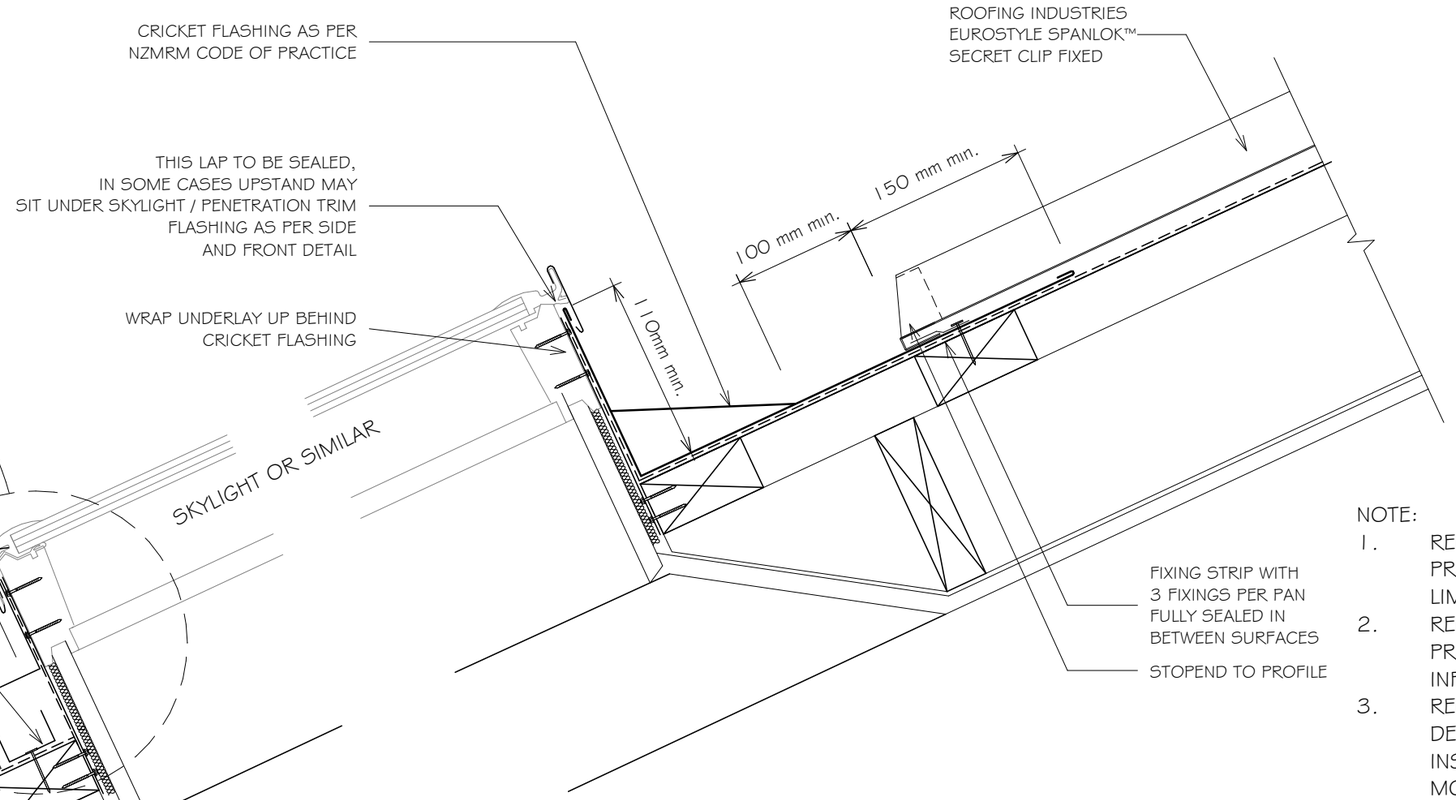

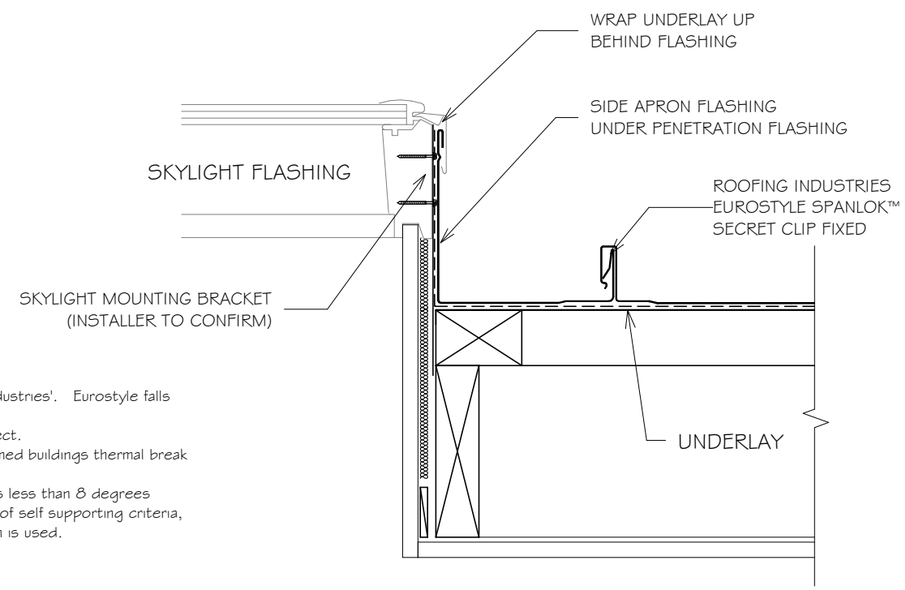

NOTE:

1. REFER TO NZMRM CODE OF PRACTICE FOR CATCHMENT AREA LIMITATIONS.
2. REFER TO NZMRM CODE OF PRACTICE FOR FURTHER INFORMATION.
3. REFER TO SKYLIGHT MANUFACTURERS DETAILS AS SOME LOW PITCH INSTALLATIONS REQUIRE MODIFICATIONS TO THESE DETAILS.
4. SKYLIGHT MOUNTING BRACKETS ARE INDICATIVE ONLY AND DIFFERENT SKYLIGHTS / PENETRATIONS MAY REQUIRE DIFFERENT FRAMING, MOUNTING AND FLASHING DETAILS.
5. HIGH TO EXTRA HIGH WIND ZONE DOUBLE RIVET.
6. ALLOW FOR SEPARATION FROM ANY CORROSIVE TIMBER TREATMENTS.
7. ALL DIMENSIONS SHOWN ON DRAWINGS ARE NOMINAL +/- 5mm

NOTES:

- These details are generally in compliance the NZ Metal Roof & Wall Cladding Code of Practice and in some cases specific details by 'Roofing Industries'. Eurostyle falls outsider the criteria of E2/AS1 and this document is therefore not applicable.
- The building designer is ultimatley responsible to ensure that details used meet the requirements of the NZ Building Code for the specific project.
- Details of the supporting structure including cavity battens are indicative only and are the responsibility of the building designer. For steel framed buildings thermal break cavity battens may be required.
- Underlay selection and building wrap types are the responsibility of the designer, Netting or other support is generally required at roof pitches less than 8 degrees combined with a self supporting paper. At roof pitches of 8° and above where non self supporting paper is used or purlin spacing is in excess of self supporting criteria, netting or other support should be used. Alternative support to netting should be used in severe coastal environments including when aluminium is used.
- These details are for Roofing Industries profile/s as nominated and may not be applicable to other profiles.
- This drawing is the copyright of 'Roofing Industries' and can only be copied or reproduced with their permission.
- These details to be read with Roofing Industries profile technical summary regarding wind loads and fixings.
- Further information can be obtained from the NZ Metal Roof & Wall Cladding Code of Practice: www.metalroofing.org.nz or E2/AS1.

Roofing Industries
roof.co.nz

EUROSTYLE SPANLOK™ ROOFING
PENETRATION FLASHING CROSS SECTION

Detail Number: RI-ES45R081AS
Date drawn: 02/02/2018
Scale: 1 : 5@ A3

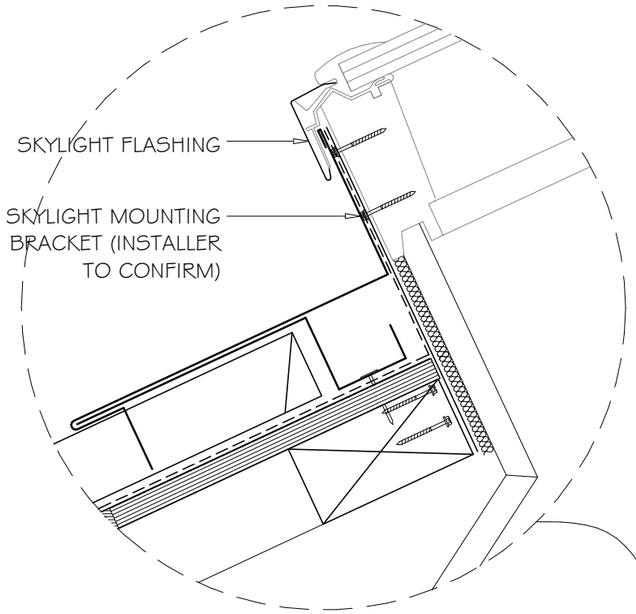

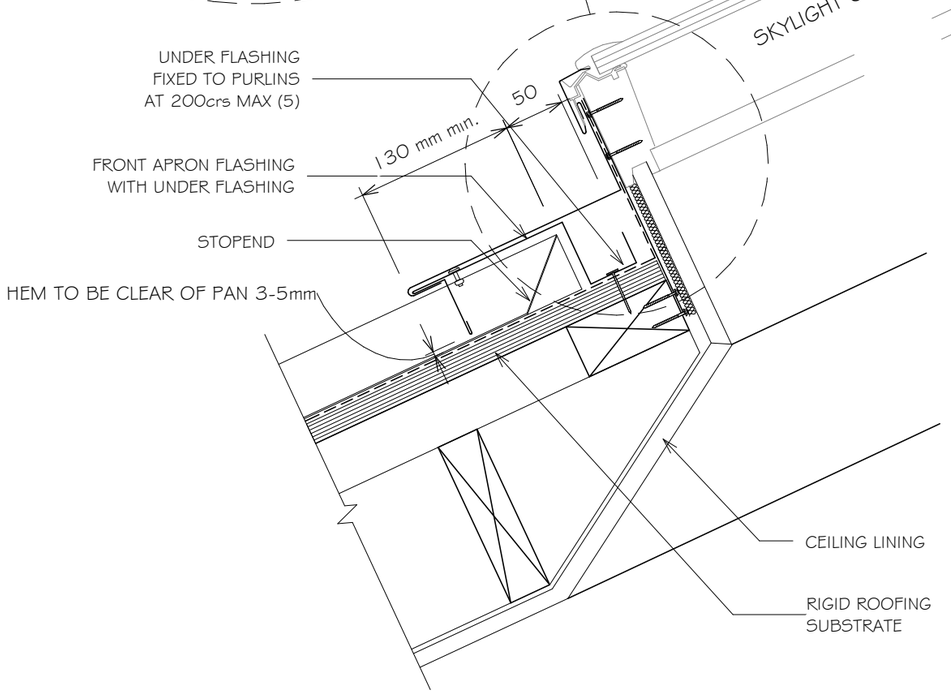

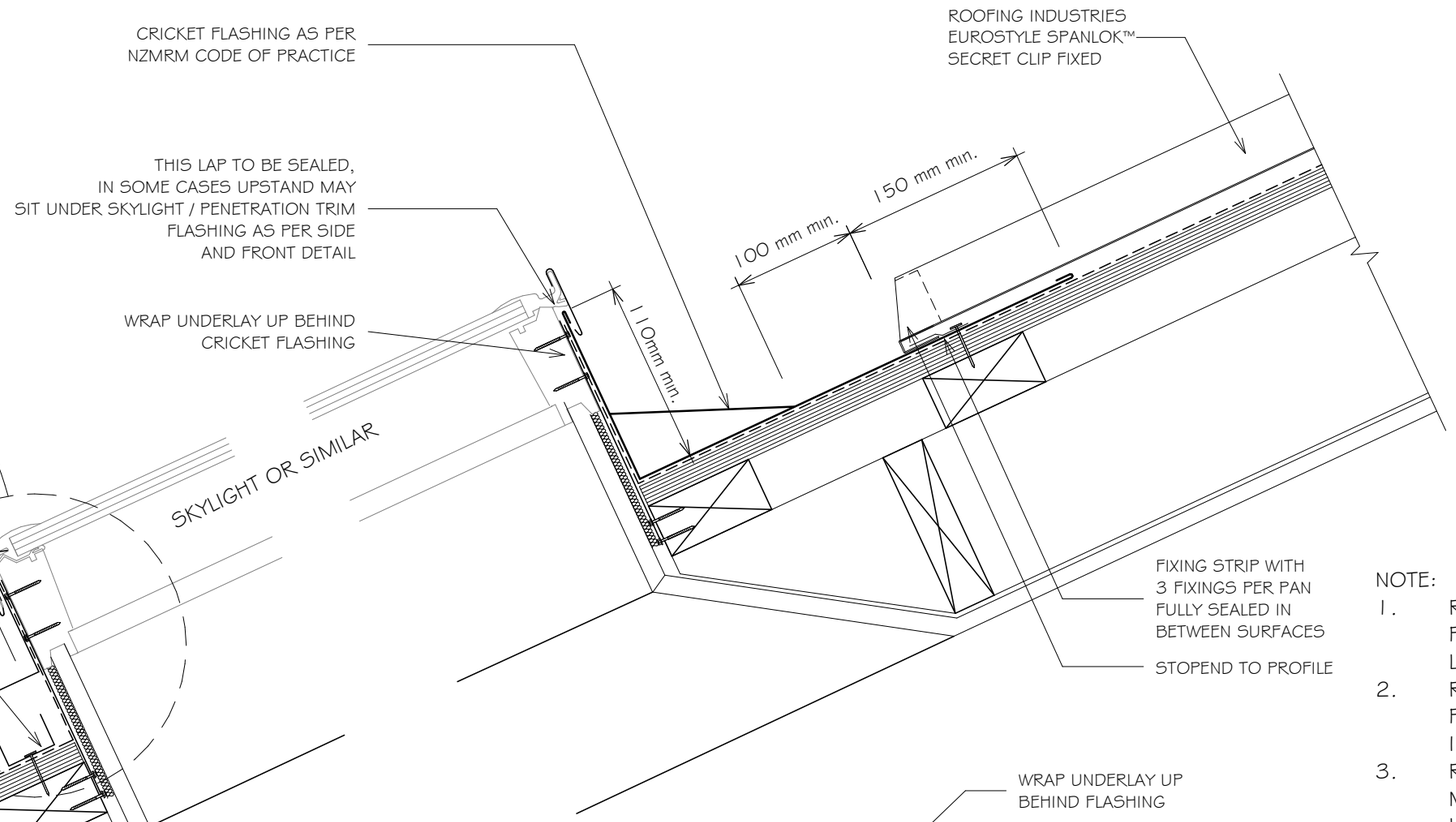

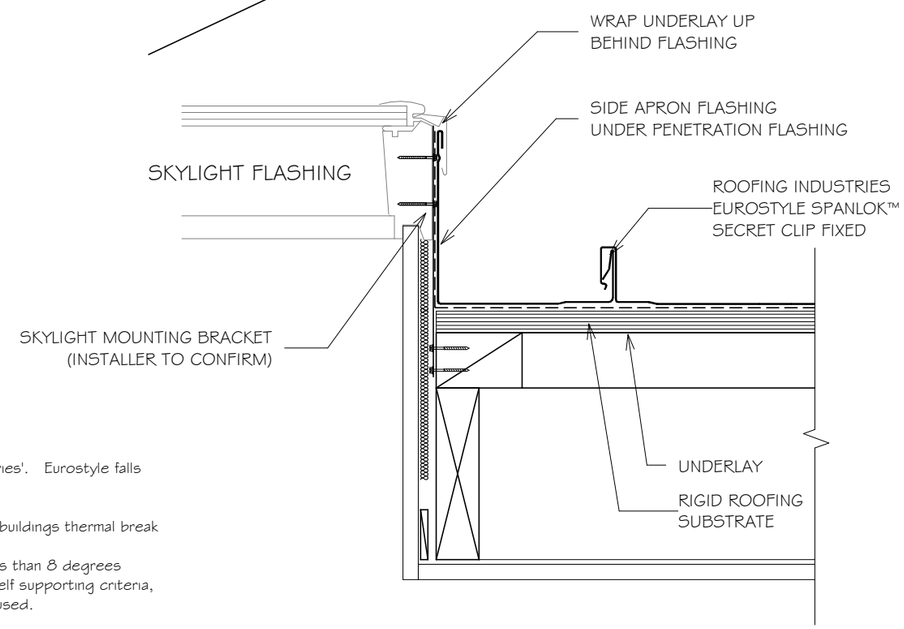

NOTE:

1. REFER TO NZMRM CODE OF PRACTICE FOR CATCHMENT AREA LIMITATIONS.
2. REFER TO NZMRM CODE OF PRACTICE FOR FURTHER INFORMATION.
3. REFER TO SKYLIGHT MANUFACTURERS DETAILS AS SOME LOW PITCH INSTALLATIONS REQUIRE MODIFICATIONS TO THESE DETAILS.
4. SKYLIGHT MOUNTING BRACKETS ARE INDICATIVE ONLY AND DIFFERENT SKYLIGHTS / PENETRATIONS MAY REQUIRE DIFFERENT FRAMING, MOUNTING AND FLASHING DETAILS.
5. HIGH TO EXTRA HIGH WIND ZONE DOUBLE RIVET.
6. ALLOW FOR SEPARATION FROM ANY CORROSIVE TIMBER TREATMENTS.
7. ALL DIMENSIONS SHOWN ON DRAWINGS ARE NOMINAL +/- 5mm

NOTES:

- These details are generally in compliance the NZ Metal Roof & Wall Cladding Code of Practice and in some cases specific details by 'Roofing Industries'. Eurostyle falls outsider the criteria of E2/AS1 and this document is therefore not applicable.
- The building designer is ultimatley responsible to ensure that details used meet the requirements of the NZ Building Code for the specific project.
- Details of the supporting structure including cavity battens are indicative only and are the responsibility of the building designer. For steel framed buildings thermal break cavity battens may be required.
- Underlay selection and building wrap types are the responsibility of the designer, Netting or other support is generally required at roof pitches less than 8 degrees combined with a self supporting paper. At roof pitches of 8° and above where non self supporting paper is used or purlin spacing is in excess of self supporting criteria, netting or other support should be used. Alternative support to netting should be used in severe coastal environments including when aluminium is used.
- These details are for Roofing Industries profile/s as nominated and may not be applicable to other profiles.
- This drawing is the copyright of 'Roofing Industries' and can only be copied or reproduced with their permission.
- These details to be read with Roofing Industries profile technical summary regarding wind loads and fixings.
- Further information can be obtained from the NZ Metal Roof & Wall Cladding Code of Practice: www.metalroofing.org.nz or E2/AS1.

Roofing Industries
roof.co.nz

EUROSTYLE SPANLOK™ WALL CLADDING
WALL CLADDING EXTERNAL VERTICAL CORNER ON CAVITY

Detail Number: RI-ES45W003A-1
Date drawn: 02/02/2018
Scale: 1 : 5@ A4

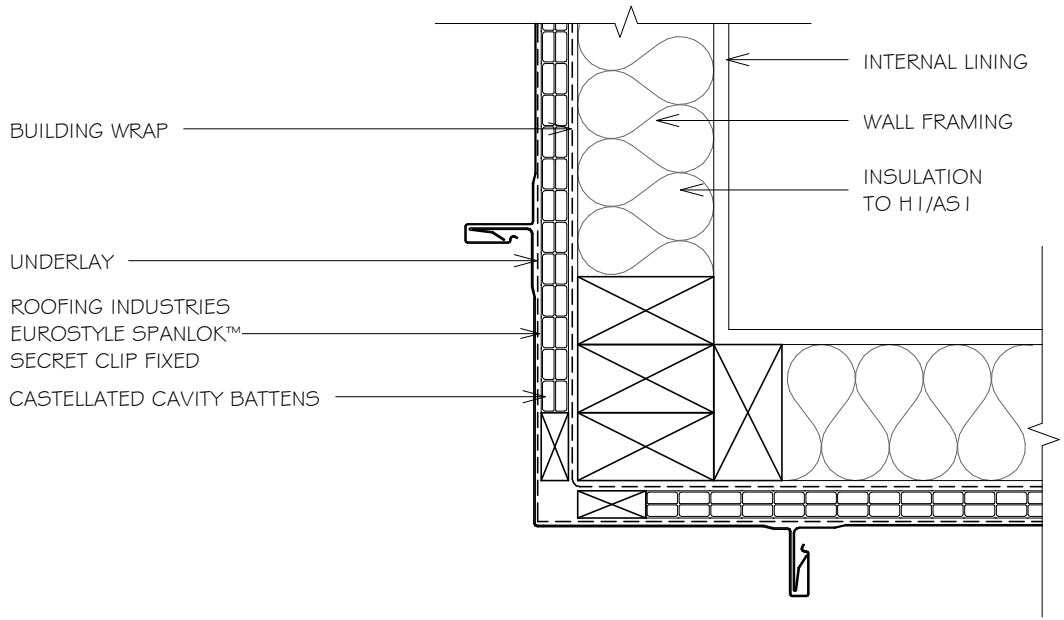

NOTES:

1. TIMBER CONTAINING CORROSIVE TREATMENTS MUST BE SEPARATED FROM METAL CLADDING BY DPC, BUILDING WRAP, PVC OR PAINTING.
2. FOLD CORNERS, MAXIMUM HEIGHT 8m
3. ALL DIMENSIONS SHOWN ON DRAWINGS ARE NOMINAL +/- 5mm
4. CASTELLATED TIMBER BATTEN OR APPROVED DRAINED BATTEN MAY BE USED WITH THIS SYSTEM.

TWO PIECE FLASHING OPTION

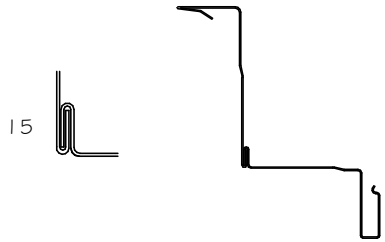

NOTES:

- These details are generally in compliance the NZ Metal Roof & Wall Cladding Code of Practice and in some cases specific details by 'Roofing Industries'. Eurostyle falls outsider the criteria of E2/AS1 and this document is therefore not applicable.
- The building designer is ultimatley responsible to ensure that details used meet the requirements of the NZ Building Code for the specific project.
- Details of the supporting structure including cavity battens are indicative only and are the responsibility of the building designer. For steel framed buildings thermal break cavity battens may be required.
- Underlay selection and building wrap types are the responsibility of the designer.
- These details are for Roofing Industries profile/s as nominated and may not be applicable to other profiles.
- This drawing is the copyright of 'Roofing Industries' and can only be copied or reproduced with their permission.
- These details to be read with Roofing Industries profile technical summary regarding wind loads and fixings.
- Further information can be obtained from the NZ Metal Roof & Wall Cladding Code of Practice: www.metalroofing.org.nz or E2/AS1.

Roofing Industries
roof.co.nz

EUROSTYLE SPANLOK™ WALL CLADDING
WALL CLADDING EXTERNAL VERTICAL CORNER ON CAVITY

Detail Number: RI-ES45W003AS-1
Date drawn: 02/02/2018
Scale: 1 : 5@ A4

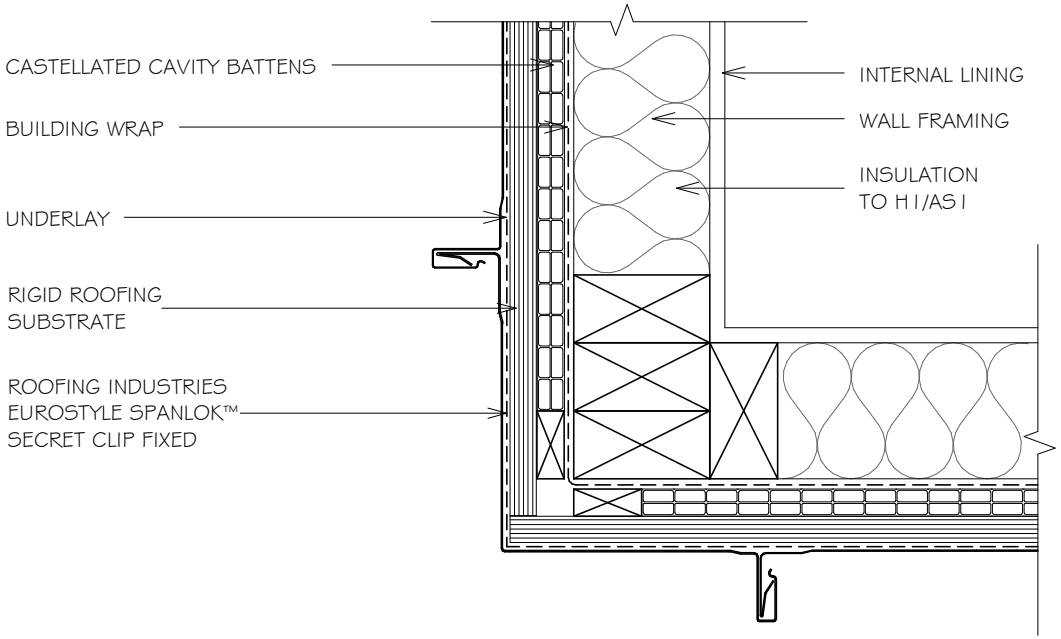

NOTES:

1. TIMBER CONTAINING CORROSIVE TREATMENTS MUST BE SEPARATED FROM METAL CLADDING BY DPC, BUILDING WRAP, PVC OR PAINTING.
2. FOLD CORNERS, MAXIMUM HEIGHT 8m
3. ALL DIMENSIONS SHOWN ON DRAWINGS ARE NOMINAL +/- 5mm
4. CASTELLATED TIMBER BATTEN OR APPROVED DRAINED BATTEN MAY BE USED WITH THIS SYSTEM.

TWO PIECE FLASHING OPTION

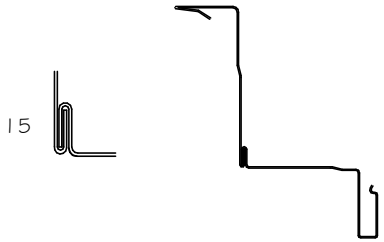

NOTES:

- These details are generally in compliance the NZ Metal Roof & Wall Cladding Code of Practice and in some cases specific details by 'Roofing Industries'. Eurostyle falls outsider the criteria of E2/AS1 and this document is therefore not applicable.
- The building designer is ultimatley responsible to ensure that details used meet the requirements of the NZ Building Code for the specific project.
- Details of the supporting structure including cavity battens are indicative only and are the responsibility of the building designer. For steel framed buildings thermal break cavity battens may be required.
- Underlay selection and building wrap types are the responsibility of the designer.
- These details are for Roofing Industries profile/s as nominated and may not be applicable to other profiles.
- This drawing is the copyright of 'Roofing Industries' and can only be copied or reproduced with their permission.
- These details to be read with Roofing Industries profile technical summary regarding wind loads and fixings.
- Further information can be obtained from the NZ Metal Roof & Wall Cladding Code of Practice: www.metalroofing.org.nz or E2/AS1.

Roofing Industries
roof.co.nz

EUROSTYLE SPANLOK™ WALL CLADDING
WALL CLADDING EXTERNAL VERTICAL CORNER ON CAVITY WITH CLADDING CHANGE

Detail Number: RI-ES45W003B
Date drawn: 05/07/18
Scale: 1 : 5@ A4

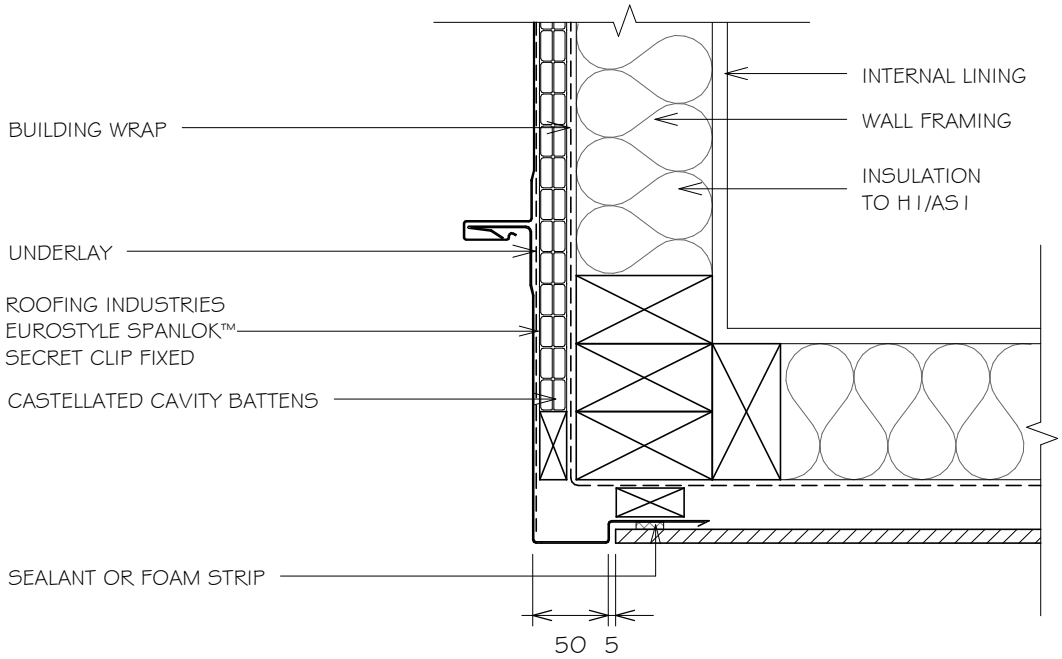

NOTES:

1. TIMBER CONTAINING CORROSIVE TREATMENTS MUST BE SEPARATED FROM METAL CLADDING BY DPC, BUILDING WRAP, PVC OR PAINTING.
2. FOLD CORNERS, MAXIMUM HEIGHT 8m
3. ALL DIMENSIONS SHOWN ON DRAWINGS ARE NOMINAL +/- 5mm
4. CASTELLATED TIMBER BATTEN OR APPROVED DRAINED BATTEN MAY BE USED WITH THIS SYSTEM.

TWO PIECE FLASHING OPTION

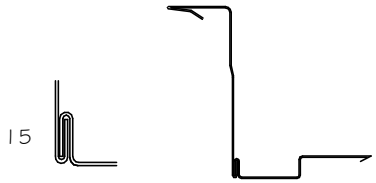

NOTES:

- These details are generally in compliance the NZ Metal Roof & Wall Cladding Code of Practice and in some cases specific details by 'Roofing Industries'. Eurostyle falls outsider the criteria of E2/AS1 and this document is therefore not applicable.
- The building designer is ultimatley responsible to ensure that details used meet the requirements of the NZ Building Code for the specific project.
- Details of the supporting structure including cavity battens are indicative only and are the responsibility of the building designer. For steel framed buildings thermal break cavity battens may be required.
- Underlay selection and building wrap types are the responsibility of the designer.
- These details are for Roofing Industries profile/s as nominated and may not be applicable to other profiles.
- This drawing is the copyright of 'Roofing Industries' and can only be copied or reproduced with their permission.
- These details to be read with Roofing Industries profile technical summary regarding wind loads and fixings.
- Further information can be obtained from the NZ Metal Roof & Wall Cladding Code of Practice: www.metalroofing.org.nz or E2/AS1.

Roofing Industries
roof.co.nz

EUROSTYLE SPANLOK™ WALL CLADDING
WALL CLADDING INTERNAL VERTICAL CORNER ON CAVITY

Detail Number: RI-ES45W004A-1
Date drawn: 02/02/2018
Scale: 1 : 5@ A4

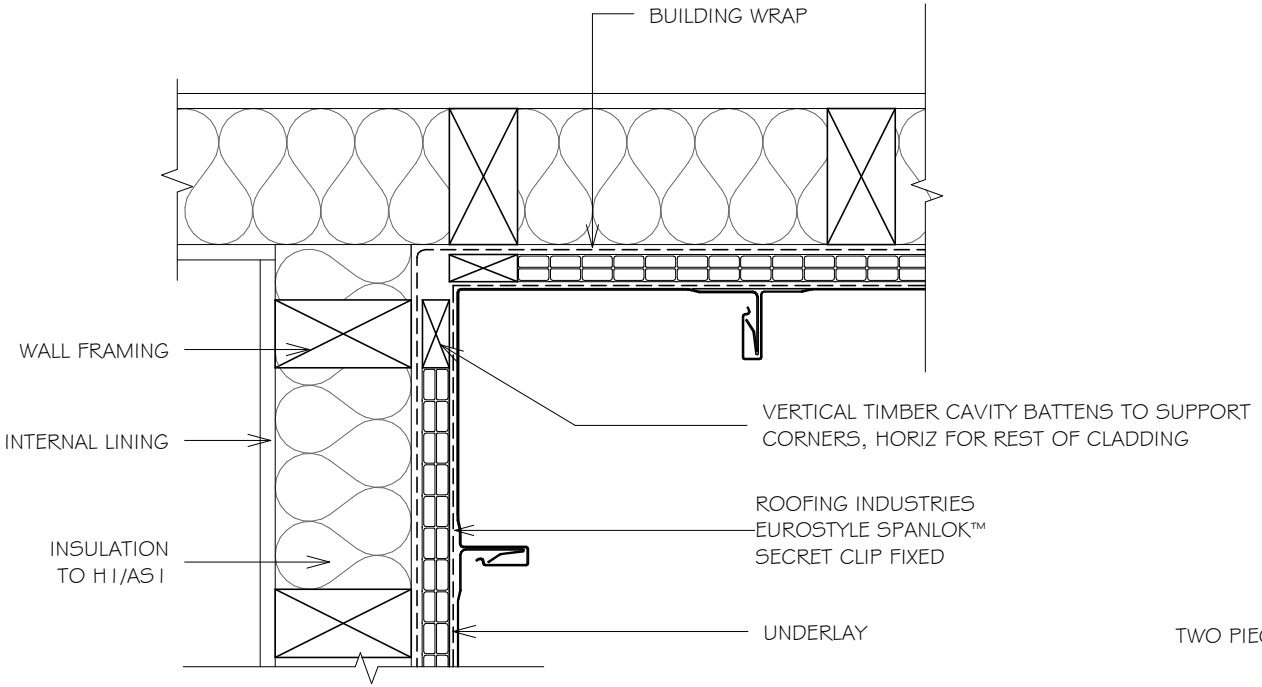

NOTES:

1. TIMBER CONTAINING CORROSIVE TREATMENTS MUST BE SEPARATED FROM METAL CLADDING BY DPC, BUILDING WRAP, PVC OR PAINTING.
2. FOLD CORNERS, MAXIMUM HEIGHT 8m
3. ALL DIMENSIONS SHOWN ON DRAWINGS ARE NOMINAL +/- 5mm
4. CASTELLATED TIMBER BATTEN OR APPROVED DRAINED BATTEN MAY BE USED WITH THIS SYSTEM.

TWO PIECE FLASHING OPTION

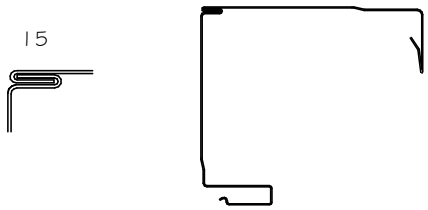

NOTES:

- These details are generally in compliance the NZ Metal Roof & Wall Cladding Code of Practice and in some cases specific details by 'Roofing Industries'. Eurostyle falls outsider the criteria of E2/AS1 and this document is therefore not applicable.
- The building designer is ultimatley responsible to ensure that details used meet the requirements of the NZ Building Code for the specific project.
- Details of the supporting structure including cavity battens are indicative only and are the responsibility of the building designer. For steel framed buildings thermal break cavity battens may be required.
- Underlay selection and building wrap types are the responsibility of the designer.
- These details are for Roofing Industries profile/s as nominated and may not be applicable to other profiles.
- This drawing is the copyright of 'Roofing Industries' and can only be copied or reproduced with their permission.
- These details to be read with Roofing Industries profile technical summary regarding wind loads and fixings.
- Further information can be obtained from the NZ Metal Roof & Wall Cladding Code of Practice: www.metalroofing.org.nz or E2/AS1.

Roofing Industries
roof.co.nz

EUROSTYLE SPANLOK™ WALL CLADDING
WALL CLADDING INTERNAL VERTICAL CORNER ON CAVITY

Detail Number: RI-ES45W004AS-1
Date drawn: 02/02/2018
Scale: 1 : 5@ A4

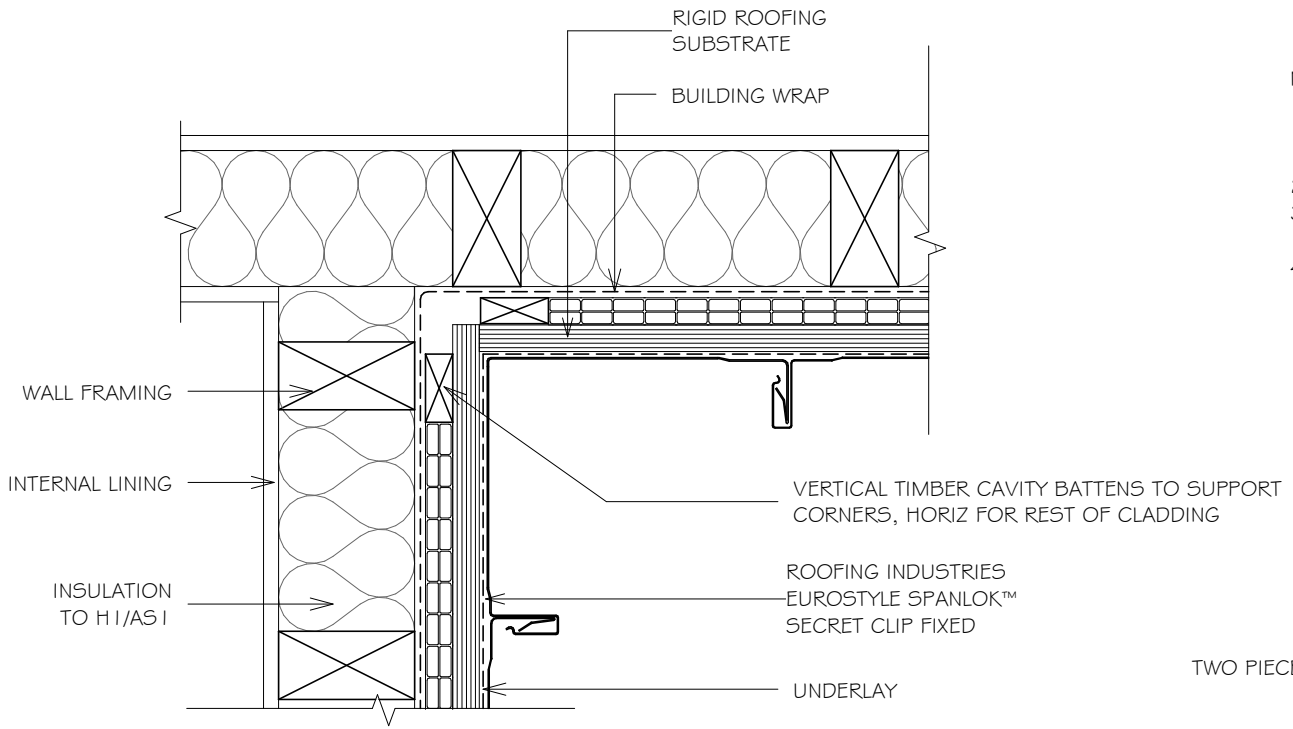

NOTES:

1. TIMBER CONTAINING CORROSIVE TREATMENTS MUST BE SEPARATED FROM METAL CLADDING BY DPC, BUILDING WRAP, PVC OR PAINTING.
2. FOLD CORNERS, MAXIMUM HEIGHT 8m
3. ALL DIMENSIONS SHOWN ON DRAWINGS ARE NOMINAL +/- 5mm
4. CASTELLATED TIMBER BATTEN OR APPROVED DRAINED BATTEN MAY BE USED WITH THIS SYSTEM.

TWO PIECE FLASHING OPTION

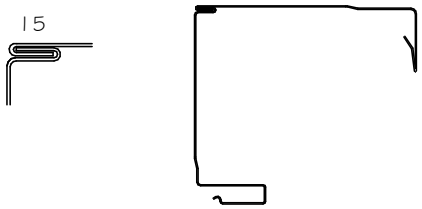

NOTES:

- These details are generally in compliance the NZ Metal Roof & Wall Cladding Code of Practice and in some cases specific details by 'Roofing Industries'. Eurostyle falls outsider the criteria of E2/AS1 and this document is therefore not applicable.
- The building designer is ultimatley responsible to ensure that details used meet the requirements of the NZ Building Code for the specific project.
- Details of the supporting structure including cavity battens are indicative only and are the responsibility of the building designer. For steel framed buildings thermal break cavity battens may be required.
- Underlay selection and building wrap types are the responsibility of the designer.
- These details are for Roofing Industries profile/s as nominated and may not be applicable to other profiles.
- This drawing is the copyright of 'Roofing Industries' and can only be copied or reproduced with their permission.
- These details to be read with Roofing Industries profile technical summary regarding wind loads and fixings.
- Further information can be obtained from the NZ Metal Roof & Wall Cladding Code of Practice: www.metalroofing.org.nz or E2/AS1.

Roofing Industries
roof.co.nz

EUROSTYLE SPANLOK™ WALL CLADDING
WALL CLADDING INTERNAL VERTICAL CORNER ON CAVITY WITH CLADDING CHANGE

Detail Number: RI-ES45W004B
Date drawn: 05/07/18
Scale: 1 : 5@ A4

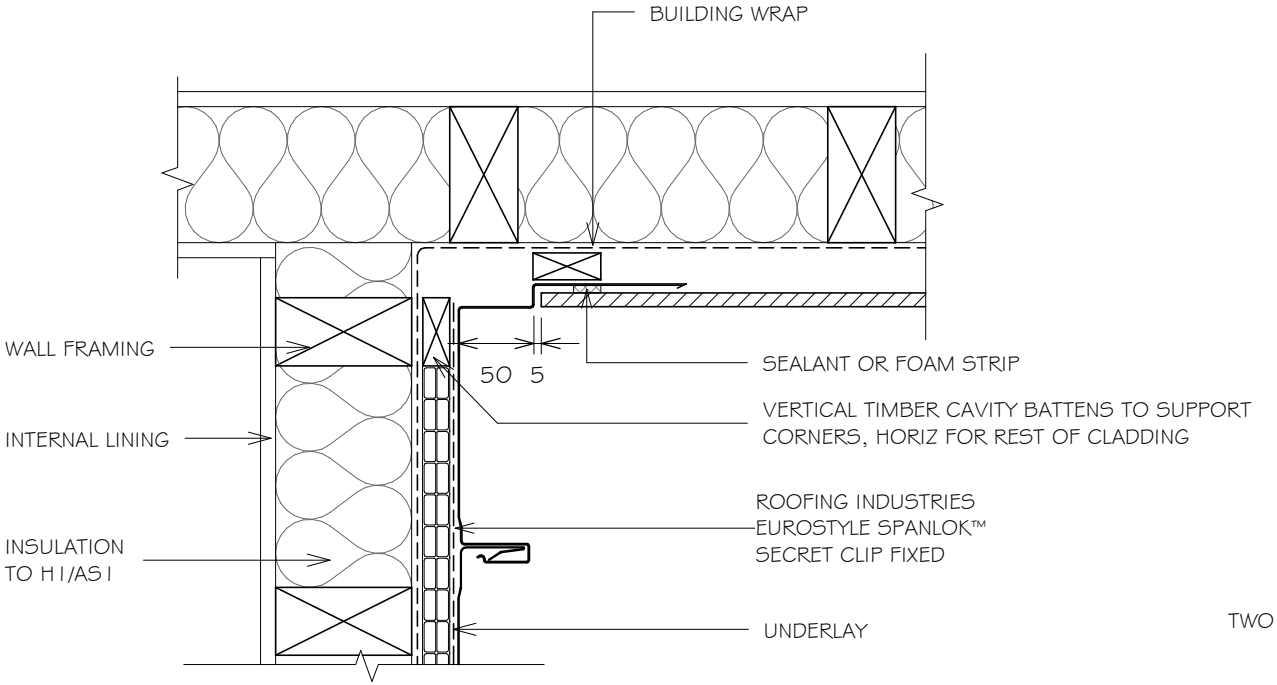

NOTES:

1. TIMBER CONTAINING CORROSIVE TREATMENTS MUST BE SEPARATED FROM METAL CLADDING BY DPC, BUILDING WRAP, PVC OR PAINTING.
2. FOLD CORNERS, MAXIMUM HEIGHT 8m
3. ALL DIMENSIONS SHOWN ON DRAWINGS ARE NOMINAL +/- 5mm
4. CASTELLATED TIMBER BATTEN OR APPROVED DRAINED BATTEN MAY BE USED WITH THIS SYSTEM.

TWO PIECE FLASHING OPTION

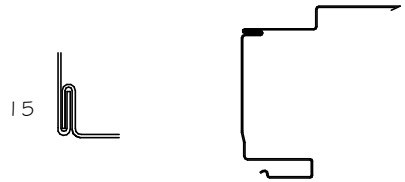

NOTES:

- These details are generally in compliance the NZ Metal Roof & Wall Cladding Code of Practice and in some cases specific details by 'Roofing Industries'. Eurostyle falls outsider the criteria of E2/AS1 and this document is therefore not applicable.
- The building designer is ultimatley responsible to ensure that details used meet the requirements of the NZ Building Code for the specific project.
- Details of the supporting structure including cavity battens are indicative only and are the responsibility of the building designer. For steel framed buildings thermal break cavity battens may be required.
- Underlay selection and building wrap types are the responsibility of the designer.
- These details are for Roofing Industries profile/s as nominated and may not be applicable to other profiles.
- This drawing is the copyright of 'Roofing Industries' and can only be copied or reproduced with their permission.
- These details to be read with Roofing Industries profile technical summary regarding wind loads and fixings.
- Further information can be obtained from the NZ Metal Roof & Wall Cladding Code of Practice: www.metalroofing.org.nz or E2/AS1.

Roofing Industries
roof.co.nz

EUROSTYLE SPANLOK™ WALL CLADDING
WALL CLADDING BASE OF VERTICAL CLADDING ON CAVITY

Detail Number: RI-ES45W005A

Date drawn: 02/02/2018

Scale: 1 : 5@ A4

1. FOR FIXING METHODS REFER TO SPECIFICATIONS.
2. THIS DETAIL TO BE CONFIRMED BY ROOFING INDUSTRIES TECHNICAL DEPT PRIOR TO USE.
3. ALLOW FOR SEPARATION FROM ANY CORROSIVE TIMBER TREATMENTS.
4. ALL DIMENSIONS SHOWN ON DRAWINGS ARE NOMINAL +/- 5mm
5. CASTELLATED TIMBER BATTEN OR APPROVED DRAINED BATTEN MAY BE USED WITH THIS SYSTEM.

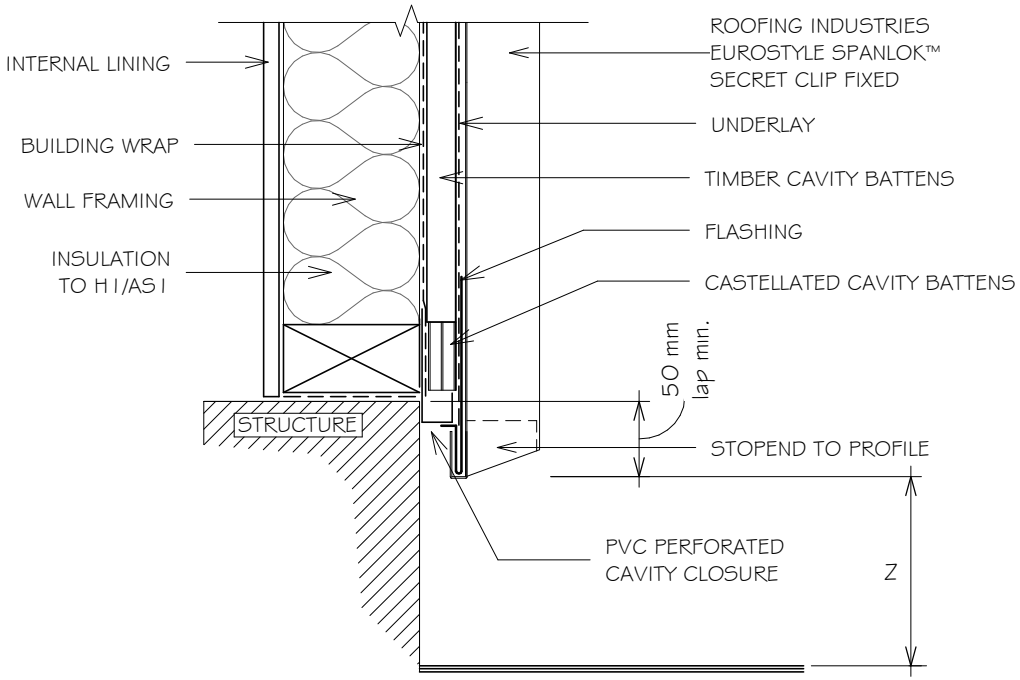

SET DOWN	MINIMUM
	Z
PAVED SURFACE	100mm
UNPAVED SURFACE	175mm

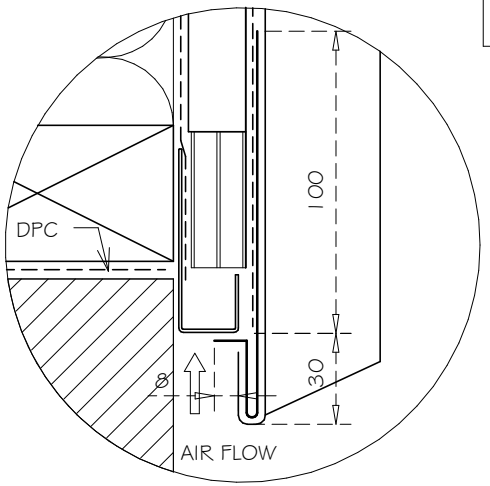

NOTES:

- These details are generally in compliance the NZ Metal Roof & Wall Cladding Code of Practice and in some cases specific details by 'Roofing Industries'. Eurostyle falls outsider the criteria of E2/AS1 and this document is therefore not applicable.
- The building designer is ultimatley responsible to ensure that details used meet the requirements of the NZ Building Code for the specific project.
- Details of the supporting structure including cavity battens are indicative only and are the responsibility of the building designer. For steel framed buildings thermal break cavity battens may be required.
- Underlay selection and building wrap types are the responsibility of the designer.
- These details are for Roofing Industries profile/s as nominated and may not be applicable to other profiles.
- This drawing is the copyright of 'Roofing Industries' and can only be copied or reproduced with their permission.
- These details to be read with Roofing Industries profile technical summary regarding wind loads and fixings.
- Further information can be obtained from the NZ Metal Roof & Wall Cladding Code of Practice: www.metalroofing.org.nz or E2/AS1.

Roofing Industries roof.co.nz

EUROSTYLE SPANLOK™ WALL CLADDING
WALL CLADDING BASE OF VERTICAL CLADDING ON CAVITY

Detail Number: RI-ES45W005AS

Date drawn: 02/02/2018

Scale: 1 : 5@ A4

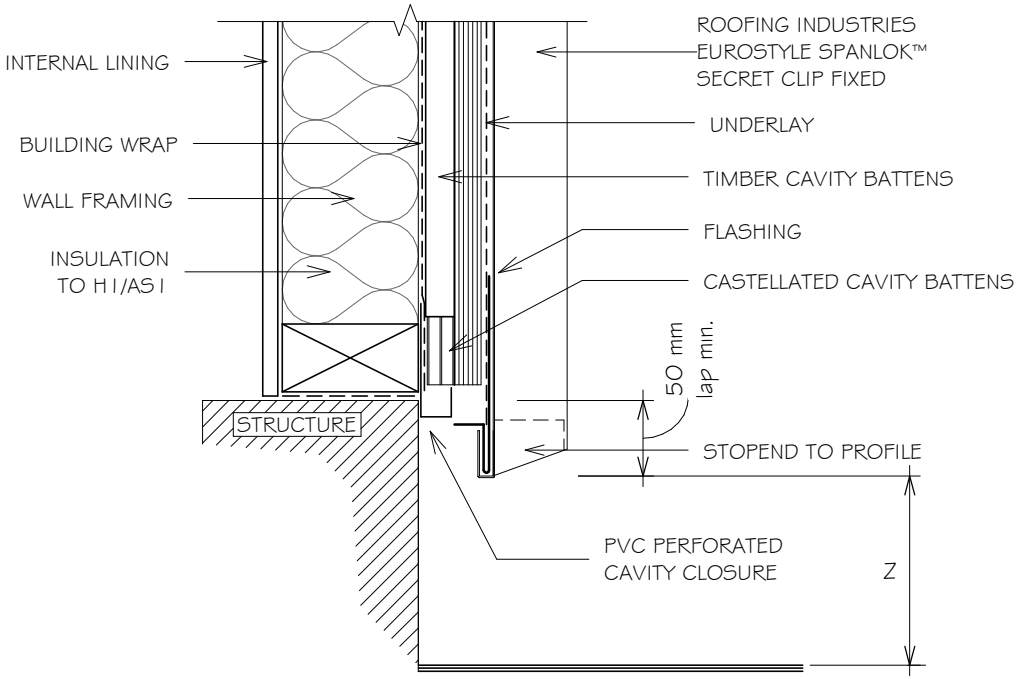

1. FOR FIXING METHODS REFER TO SPECIFICATIONS.
2. THIS DETAIL TO BE CONFIRMED BY ROOFING INDUSTRIES TECHNICAL DEPT PRIOR TO USE.
3. ALLOW FOR SEPARATION FROM ANY CORROSIVE TIMBER TREATMENTS.
4. ALL DIMENSIONS SHOWN ON DRAWINGS ARE NOMINAL +/- 5mm
5. CASTELLATED TIMBER BATTEN OR APPROVED DRAINED BATTEN MAY BE USED WITH THIS SYSTEM.

SET DOWN	MINIMUM
	Z
PAVED SURFACE	100mm
UNPAVED SURFACE	175mm

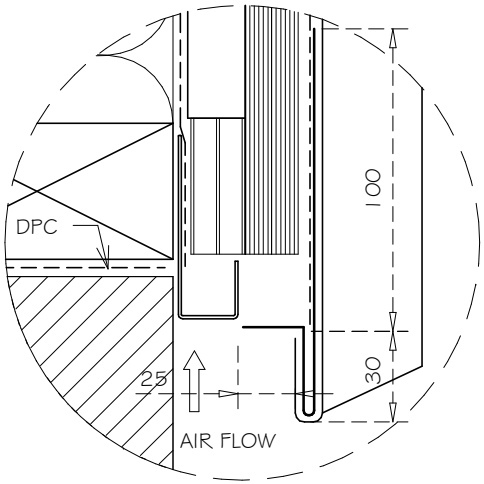

NOTES:

- These details are generally in compliance the NZ Metal Roof & Wall Cladding Code of Practice and in some cases specific details by 'Roofing Industries'. Eurostyle falls outsider the criteria of E2/AS1 and this document is therefore not applicable.
- The building designer is ultimatley responsible to ensure that details used meet the requirements of the NZ Building Code for the specific project.
- Details of the supporting structure including cavity battens are indicative only and are the responsibility of the building designer. For steel framed buildings thermal break cavity battens may be required.
- Underlay selection and building wrap types are the responsibility of the designer.
- These details are for Roofing Industries profile/s as nominated and may not be applicable to other profiles.
- This drawing is the copyright of 'Roofing Industries' and can only be copied or reproduced with their permission.
- These details to be read with Roofing Industries profile technical summary regarding wind loads and fixings.
- Further information can be obtained from the NZ Metal Roof & Wall Cladding Code of Practice: www.metalroofing.org.nz or E2/AS1.

Roofing Industries roof.co.nz

EUROSTYLE SPANLOK™ WALL CLADDING WINDOW / DOOR HEAD FLASHING FOR VERTICAL CLADDING

Detail Number: RI-ES45W012A

Date drawn: 02/02/2018

Scale: 1 : 5@ A4

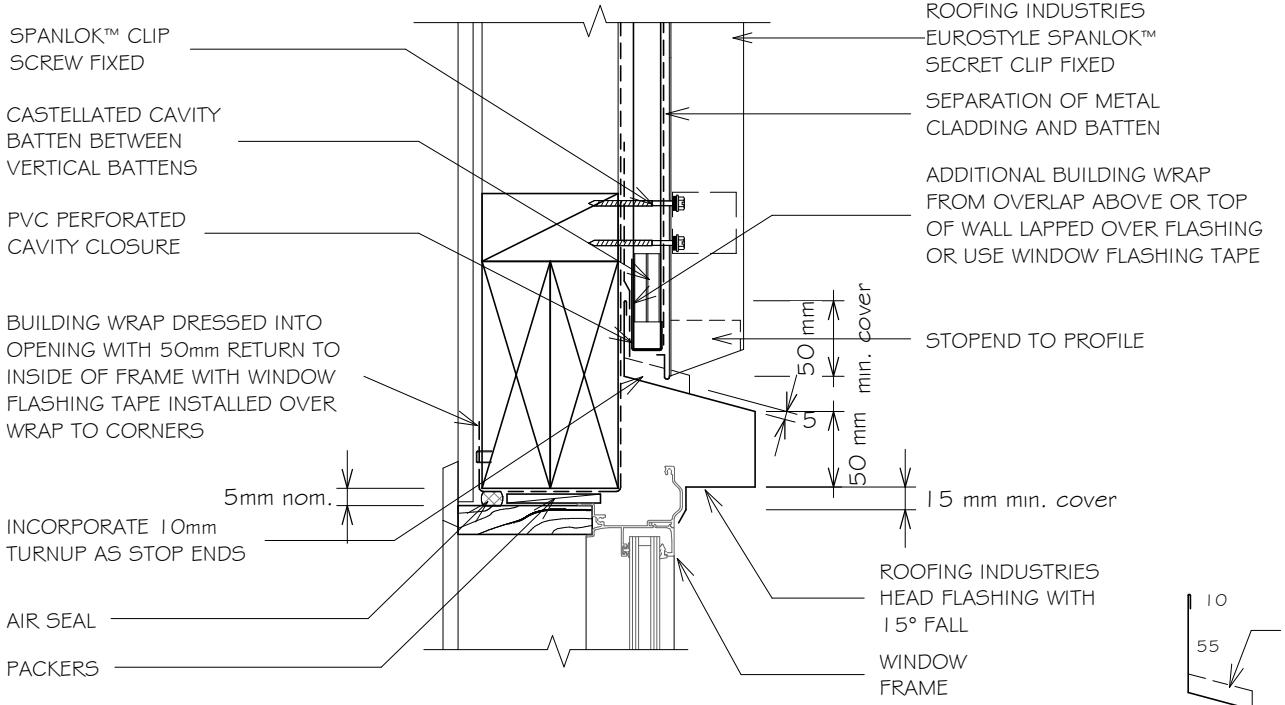

GENERAL NOTES:

1. REFER TO E2/AS1 FOR GENERAL WINDOW OPENING FOR WRAPPING OF FRAMED OPENING PRIOR TO WINDOW INSTALLATION.
2. A MIN. OF 8mm EFFECTIVE COVER AT SILLS SHALL BE PERMITTED WHERE NECESSARY TO ALLOW FOR TOLERANCES.
3. WINDOW PROFILE TO BE SELECTED TO ACHIEVE COVER SHOWN IN DETAILS.
4. ARCHITRAVE'S ARE SHOWN FOR CONSISTENCY ONLY, DETAIL MAY BE USED WITH REBATED LINER.
5. LIAISE WITH WINDOW MANUFACTURER PRIOR TO INSTALLATION.
6. SEAL HEAD FLASHING TO WINDOW IN VERY HIGH & EXTRA HIGH WIND ZONES.
7. ALLOW FOR SEPARATION FROM ANY CORROSIVE TIMBER TREATMENTS.
8. ALL DIMENSIONS SHOWN ON DRAWINGS ARE NOMINAL +/- 5mm
9. CASTELLATED TIMBER BATTEN OR APPROVED DRAINED BATTEN MAY BE USED WITH THIS SYSTEM.

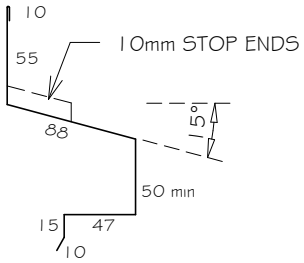

(Dimensions are indicative only)
Turn down end of head flashing to jamb flashing

REFERENCE FLASHINGS:
NZ METAL ROOF AND WALL CLADDING CODE OF PRACTICE.
E2/AS1 OR REFER MANUF DETAILING.
DIMENSIONS ARE INDICATIVE ONLY

NOTES:

- These details are generally in compliance the NZ Metal Roof & Wall Cladding Code of Practice and in some cases specific details by 'Roofing Industries'. Eurostyle falls outsider the criteria of E2/AS1 and this document is therefore not applicable.
- The building designer is ultimatley responsible to ensure that details used meet the requirements of the NZ Building Code for the specific project.
- Details of the supporting structure including cavity battens are indicative only and are the responsibility of the building designer. For steel framed buildings thermal break cavity battens may be required.
- Underlay selection and building wrap types are the responsibility of the designer.
- These details are for Roofing Industries profile/s as nominated and may not be applicable to other profiles.
- This drawing is the copyright of 'Roofing Industries' and can only be copied or reproduced with their permission.
- These details to be read with Roofing Industries profile technical summary regarding wind loads and fixings.
- Further information can be obtained from the NZ Metal Roof & Wall Cladding Code of Practice: www.metalroofing.org.nz or E2/AS1.

Roofing Industries
roof.co.nz

EUROSTYLE SPANLOK™ WALL CLADDING WINDOW / DOOR HEAD FLASHING FOR VERTICAL CLADDING

Detail Number: RI-ES45W012AS

Date drawn: 02/02/2018

Scale: 1 : 5@ A4

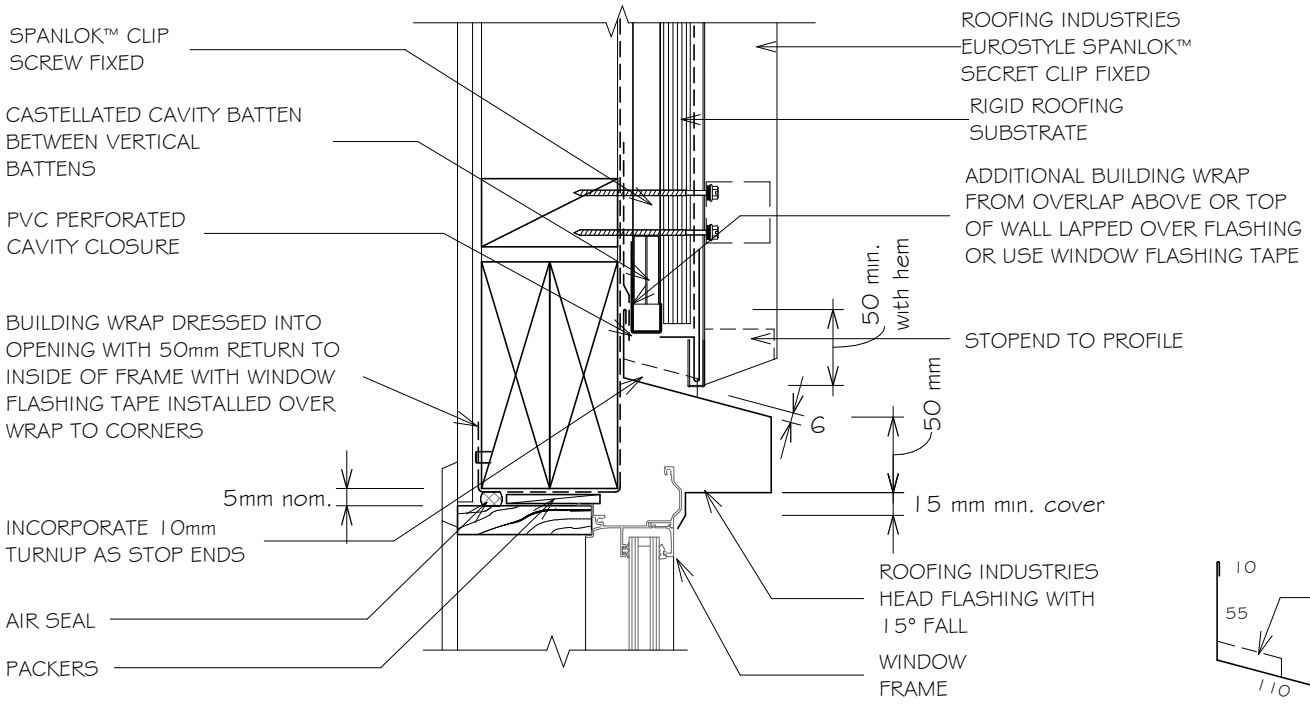

GENERAL NOTES:

1. REFER TO E2/AS1 FOR GENERAL WINDOW OPENING FOR WRAPPING OF FRAMED OPENING PRIOR TO WINDOW INSTALLATION.
2. A MIN. OF 8mm EFFECTIVE COVER AT SILLS SHALL BE PERMITTED WHERE NECESSARY TO ALLOW FOR TOLERANCES.
3. WINDOW PROFILE TO BE SELECTED TO ACHIEVE COVER SHOWN IN DETAILS.
4. ARCHITRAVE'S ARE SHOWN FOR CONSISTENCY ONLY, DETAIL MAY BE USED WITH REBATED LINER.
5. LIAISE WITH WINDOW MANUFACTURER PRIOR TO INSTALLATION.
6. SEAL HEAD FLASHING TO WINDOW IN VERY HIGH & EXTRA HIGH WIND ZONES.
7. ALLOW FOR SEPARATION FROM ANY CORROSIVE TIMBER TREATMENTS.
8. ALL DIMENSIONS SHOWN ON DRAWINGS ARE NOMINAL +/- 5mm
9. CASTELLATED TIMBER BATTEN OR APPROVED DRAINED BATTEN MAY BE USED WITH THIS SYSTEM.

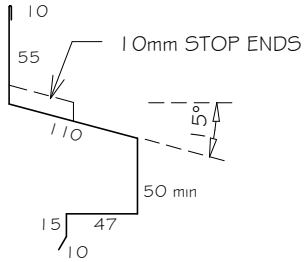

(Dimensions are indicative only)
Turn down end of head flashing to jamb flashing

REFERENCE FLASHINGS:
NZ METAL ROOF AND WALL CLADDING CODE OF PRACTICE.
E2/AS1 OR REFER MANUF DETAILING.
DIMENSIONS ARE INDICATIVE ONLY

NOTES:

- These details are generally in compliance the NZ Metal Roof & Wall Cladding Code of Practice and in some cases specific details by 'Roofing Industries'. Eurostyle falls outsider the criteria of E2/AS1 and this document is therefore not applicable.
- The building designer is ultimatley responsible to ensure that details used meet the requirements of the NZ Building Code for the specific project.
- Details of the supporting structure including cavity battens are indicative only and are the responsibility of the building designer. For steel framed buildings thermal break cavity battens may be required.
- Underlay selection and building wrap types are the responsibility of the designer.
- These details are for Roofing Industries profile/s as nominated and may not be applicable to other profiles.
- This drawing is the copyright of 'Roofing Industries' and can only be copied or reproduced with their permission.
- These details to be read with Roofing Industries profile technical summary regarding wind loads and fixings.
- Further information can be obtained from the NZ Metal Roof & Wall Cladding Code of Practice: www.metalroofing.org.nz or E2/AS1.

Roofing Industries
roof.co.nz

EUROSTYLE SPANLOK™ WALL CLADDING WINDOW / DOOR JAMB FLASHING FOR VERTICAL CLADDING

Detail Number: RI-ES45W012B

Date drawn: 02/02/2018

Scale: 1 : 5@ A4

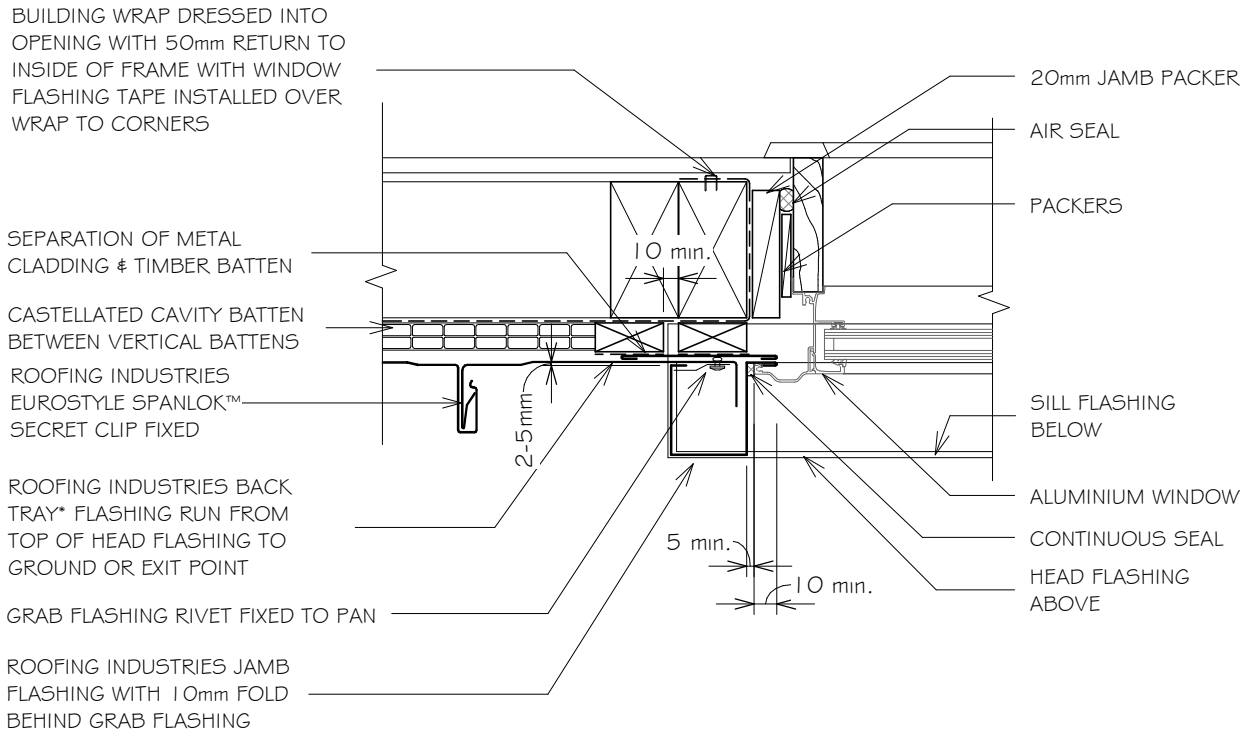

GENERAL NOTES:

1. REFER TO E2/AS1 FOR GENERAL WINDOW OPENING FOR WRAPPING OF FRAMED OPENING PRIOR TO WINDOW INSTALLATION.
2. A MIN. OF 8mm EFFECTIVE COVER AT SILLS SHALL BE PERMITTED WHERE NECESSARY TO ALLOW FOR TOLERANCES.
3. WINDOW PROFILE TO BE SELECTED TO ACHIEVE COVER SHOWN IN DETAILS.
4. ARCHITRAVE'S ARE SHOWN FOR CONSISTENCY ONLY, DETAIL MAY BE USED WITH REBATED LINER.
5. LIAISE WITH WINDOW MANUFACTURER PRIOR TO INSTALLATION.
6. ALLOW FOR SEPARATION FROM ANY CORROSIVE TIMBER TREATMENTS.
7. ALL DIMENSIONS SHOWN ON DRAWINGS ARE NOMINAL +/- 5mm
8. CASTELLATED TIMBER BATTEN OR APPROVED DRAINED BATTEN MAY BE USED WITH THIS SYSTEM.

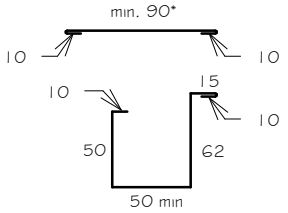

REFERENCE FLASHINGS:
NZ METAL ROOF AND WALL CLADDING CODE OF PRACTICE.
E2/AS1 OR REFER MANUF DETAILING.
DIMENSIONS ARE INDICATIVE ONLY

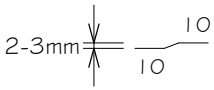

* Back tray size may require to increase to ensure coverage at ends of head flashings. Back Tray to run from top of head flashing to ground or exit point.
* (Dimensions are indicative only)
* Turn down end of head flashing

NOTES:

- These details are generally in compliance the NZ Metal Roof & Wall Cladding Code of Practice and in some cases specific details by 'Roofing Industries'. Eurostyle falls outsider the criteria of E2/AS1 and this document is therefore not applicable.
- The building designer is ultimatley responsible to ensure that details used meet the requirements of the NZ Building Code for the specific project.
- Details of the supporting structure including cavity battens are indicative only and are the responsibility of the building designer. For steel framed buildings thermal break cavity battens may be required.
- Underlay selection and building wrap types are the responsibility of the designer.
- These details are for Roofing Industries profile/s as nominated and may not be applicable to other profiles.
- This drawing is the copyright of 'Roofing Industries' and can only be copied or reproduced with their permission.
- These details to be read with Roofing Industries profile technical summary regarding wind loads and fixings.
- Further information can be obtained from the NZ Metal Roof & Wall Cladding Code of Practice: www.metalroofing.org.nz or E2/AS1.

Roofing Industries
roof.co.nz

EUROSTYLE SPANLOK™ WALL CLADDING WINDOW / DOOR JAMB FLASHING FOR VERTICAL CLADDING

Detail Number: RI-ES45W012BS

Date drawn: 02/02/2018

Scale: 1 : 5@ A4

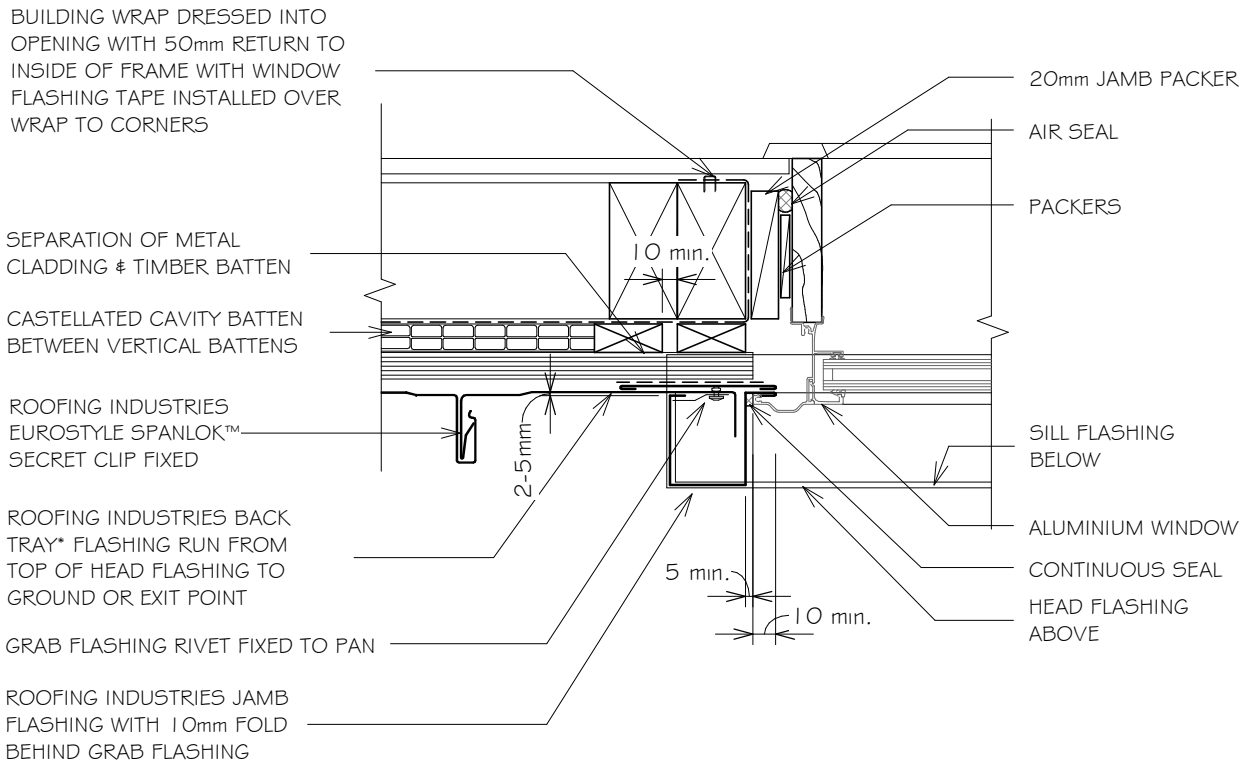

GENERAL NOTES:

1. REFER TO E2/AS1 FOR GENERAL WINDOW OPENING FOR WRAPPING OF FRAMED OPENING PRIOR TO WINDOW INSTALLATION.
2. A MIN. OF 8mm EFFECTIVE COVER AT SILLS SHALL BE PERMITTED WHERE NECESSARY TO ALLOW FOR TOLERANCES.
3. WINDOW PROFILE TO BE SELECTED TO ACHIEVE COVER SHOWN IN DETAILS.
4. ARCHITRAVE'S ARE SHOWN FOR CONSISTENCY ONLY, DETAIL MAY BE USED WITH REBATED LINER.
5. LIAISE WITH WINDOW MANUFACTURER PRIOR TO INSTALLATION.
6. ALLOW FOR SEPARATION FROM ANY CORROSIVE TIMBER TREATMENTS.
7. ALL DIMENSIONS SHOWN ON DRAWINGS ARE NOMINAL +/- 5mm
8. CASTELLATED TIMBER BATTEN OR APPROVED DRAINED BATTEN MAY BE USED WITH THIS SYSTEM.

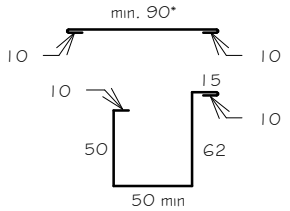

REFERENCE FLASHINGS:
NZ METAL ROOF AND WALL CLADDING CODE OF PRACTICE.
E2/AS1 OR REFER MANUF DETAILING.
DIMENSIONS ARE INDICATIVE ONLY

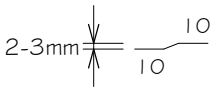

* Back tray size may require to increase to ensure coverage at ends of head flashings. Back Tray to run from top of head flashing to ground or exit point.
* (Dimensions are indicative only)
* Turn down end of head flashing

NOTES:

- These details are generally in compliance the NZ Metal Roof & Wall Cladding Code of Practice and in some cases specific details by 'Roofing Industries'. Eurostyle falls outsider the criteria of E2/AS1 and this document is therefore not applicable.
- The building designer is ultimatley responsible to ensure that details used meet the requirements of the NZ Building Code for the specific project.
- Details of the supporting structure including cavity battens are indicative only and are the responsibility of the building designer. For steel framed buildings thermal break cavity battens may be required.
- Underlay selection and building wrap types are the responsibility of the designer.
- These details are for Roofing Industries profile/s as nominated and may not be applicable to other profiles.
- This drawing is the copyright of 'Roofing Industries' and can only be copied or reproduced with their permission.
- These details to be read with Roofing Industries profile technical summary regarding wind loads and fixings.
- Further information can be obtained from the NZ Metal Roof & Wall Cladding Code of Practice: www.metalroofing.org.nz or E2/AS1.

Roofing Industries
roof.co.nz

EUROSTYLE SPANLOK™ WALL CLADDING WINDOW / DOOR SILL FLASHING FOR VERTICAL CLADDING

Detail Number: RI-ES45W012C

Date drawn: 02/02/2018

Scale: 1 : 5@ A4

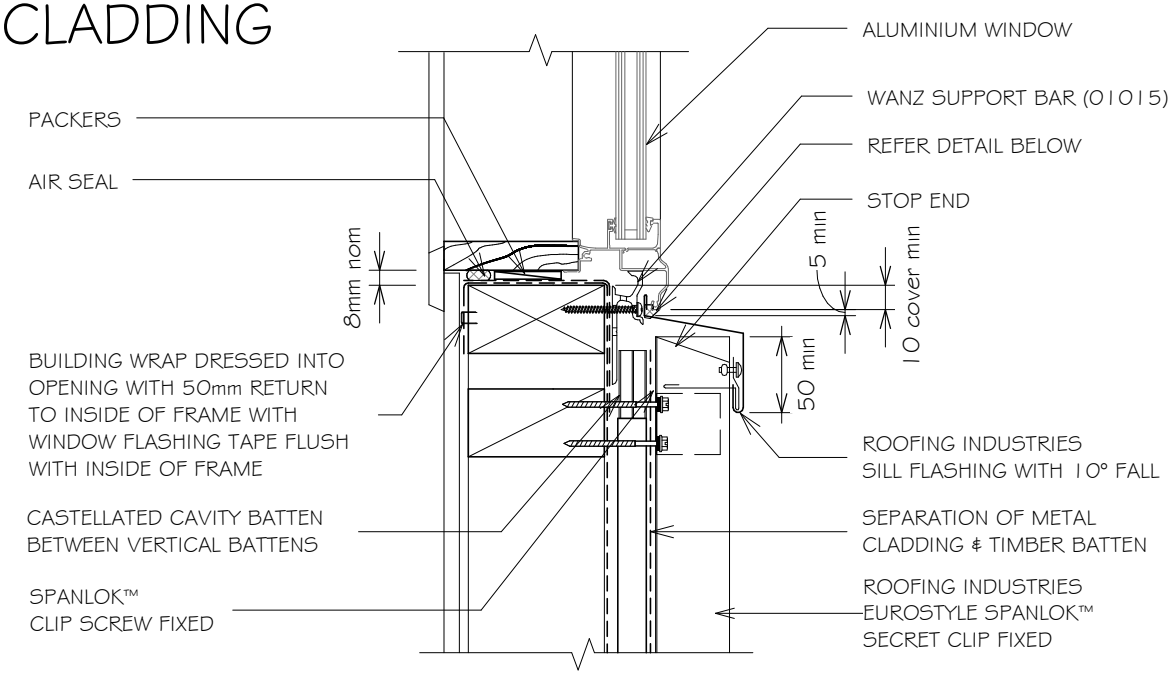

GENERAL NOTES:

1. REFER TO E2/AS1 FOR GENERAL WINDOW OPENING FOR WRAPPING OF FRAMED OPENING PRIOR TO WINDOW INSTALLATION.
2. A MIN. OF 8mm EFFECTIVE COVER AT SILLS SHALL BE PERMITTED WHERE NECESSARY TO ALLOW FOR TOLERANCES.
3. WINDOW PROFILE TO BE SELECTED TO ACHIEVE COVER SHOWN IN DETAILS.
4. ARCHITRAVE'S ARE SHOWN FOR CONSISTENCY ONLY, DETAIL MAY BE USED WITH REBATED LINER.
5. WHERE SUPPORT BRACKETS ARE REQUIRED BY THE WINDOW MANUFACTURER TO CARRY THE FRAME AND GLAZING LOADS THEY MUST BE SUPPLIED AS AN INTEGRAL PART OF THE WINDOW MANUFACTURER'S RECOMMENDATIONS.
6. LIAISE WITH WINDOW MANUFACTURER PRIOR TO INSTALLATION.
7. ALLOW FOR SEPARATION FROM ANY CORROSIVE TIMBER TREATMENTS.
8. ALL DIMENSIONS SHOWN ON DRAWINGS ARE NOMINAL +/- 5mm
9. CASTELLATED TIMBER BATTEN OR APPROVED DRAINED BATTEN MAY BE USED WITH THIS SYSTEM.

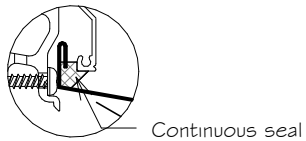

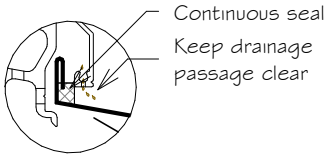

REFERENCE FLASHINGS:
NZ METAL ROOF AND WALL CLADDING CODE OF PRACTICE. E2/AS1 OR REFER MANUF DETAILING.
DIMENSIONS ARE INDICATIVE ONLY

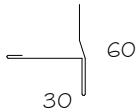

Hem to be clear of pan 3-5mm

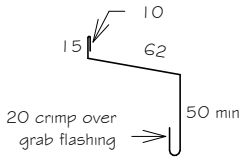

Sill flashings stop ended to receive jamb flashings (Dimensions are indicative only & show minimum lap covers)

NOTE:
Sill sealing method for flange end type drainage systems

NOTES:

- These details are generally in compliance the NZ Metal Roof & Wall Cladding Code of Practice and in some cases specific details by 'Roofing Industries'. Eurostyle falls outsider the criteria of E2/AS1 and this document is therefore not applicable.
- The building designer is ultimatley responsible to ensure that details used meet the requirements of the NZ Building Code for the specific project.
- Details of the supporting structure including cavity battens are indicative only and are the responsibility of the building designer. For steel framed buildings thermal break cavity battens may be required.
- Underlay selection and building wrap types are the responsibility of the designer.
- These details are for Roofing Industries profile/s as nominated and may not be applicable to other profiles.
- This drawing is the copyright of 'Roofing Industries' and can only be copied or reproduced with their permission.
- These details to be read with Roofing Industries profile technical summary regarding wind loads and fixings.
- Further information can be obtained from the NZ Metal Roof & Wall Cladding Code of Practice: www.metalroofing.org.nz or E2/AS1.

Roofing Industries
roof.co.nz

EUROSTYLE SPANLOK™ WALL CLADDING WINDOW / DOOR SILL FLASHING FOR VERTICAL CLADDING

Detail Number: RI-ES45W012CS

Date drawn: 02/02/2018

Scale: 1 : 5@ A4

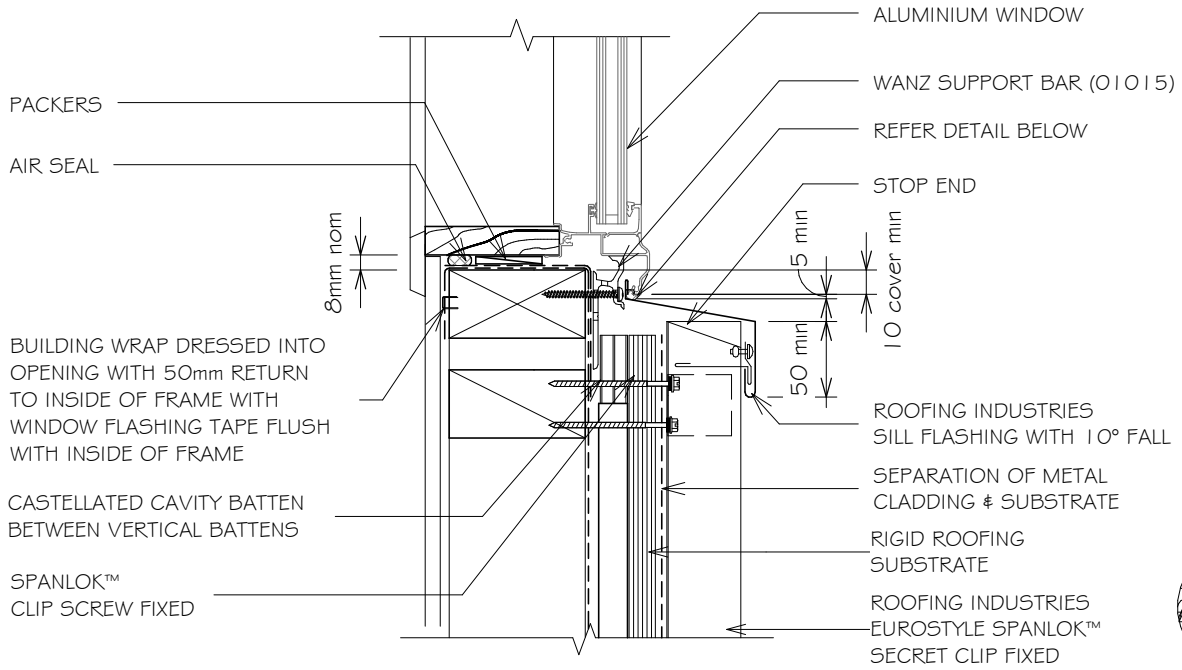

GENERAL NOTES:

1. REFER TO E2/AS1 FOR GENERAL WINDOW OPENING FOR WRAPPING OF FRAMED OPENING PRIOR TO WINDOW INSTALLATION.
2. A MIN. OF 8mm EFFECTIVE COVER AT SILLS SHALL BE PERMITTED WHERE NECESSARY TO ALLOW FOR TOLERANCES.
3. WINDOW PROFILE TO BE SELECTED TO ACHIEVE COVER SHOWN IN DETAILS.
4. ARCHITRAVE'S ARE SHOWN FOR CONSISTENCY ONLY, DETAIL MAY BE USED WITH REBATED LINER.
5. WHERE SUPPORT BRACKETS ARE REQUIRED BY THE WINDOW MANUFACTURER TO CARRY THE FRAME AND GLAZING LOADS THEY MUST BE SUPPLIED AS AN INTEGRAL PART OF THE WINDOW MANUFACTURER'S RECOMMENDATIONS.
6. LIAISE WITH WINDOW MANUFACTURER PRIOR TO INSTALLATION.
7. ALLOW FOR SEPARATION FROM ANY CORROSIVE TIMBER TREATMENTS.
8. ALL DIMENSIONS SHOWN ON DRAWINGS ARE NOMINAL +/- 5mm
9. CASTELLATED TIMBER BATTEN OR APPROVED DRAINED BATTEN MAY BE USED WITH THIS SYSTEM.

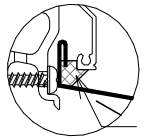

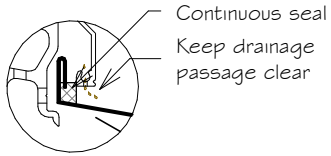

REFERENCE FLASHINGS:
NZ METAL ROOF AND WALL CLADDING CODE OF PRACTICE. E2/AS1 OR REFER MANUF DETAILING.
DIMENSIONS ARE INDICATIVE ONLY

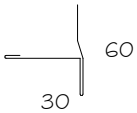

Hem to be clear of pan 3-5mm

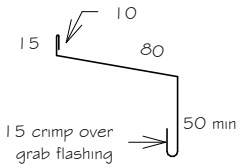

Sill flashings stop ended to receive jamb flashings (Dimensions are indicative only & show minimum lap covers)

NOTE:
Sill sealing method for flange end type drainage systems

NOTES:

- These details are generally in compliance the NZ Metal Roof & Wall Cladding Code of Practice and in some cases specific details by 'Roofing Industries'. Eurostyle falls outsider the criteria of E2/AS1 and this document is therefore not applicable.
- The building designer is ultimatley responsible to ensure that details used meet the requirements of the NZ Building Code for the specific project.
- Details of the supporting structure including cavity battens are indicative only and are the responsibility of the building designer. For steel framed buildings thermal break cavity battens may be required.
- Underlay selection and building wrap types are the responsibility of the designer.
- These details are for Roofing Industries profile/s as nominated and may not be applicable to other profiles.
- This drawing is the copyright of 'Roofing Industries' and can only be copied or reproduced with their permission.
- These details to be read with Roofing Industries profile technical summary regarding wind loads and fixings.
- Further information can be obtained from the NZ Metal Roof & Wall Cladding Code of Practice: www.metalroofing.org.nz or E2/AS1.

Roofing Industries
roof.co.nz