HINGED DOOR, SIDELIGHT MULLIONS AND COUPLING BAR

CROSS SECTION

CAD REF. VHD06-0	
DATE 01.04.19	SCALE 1:2

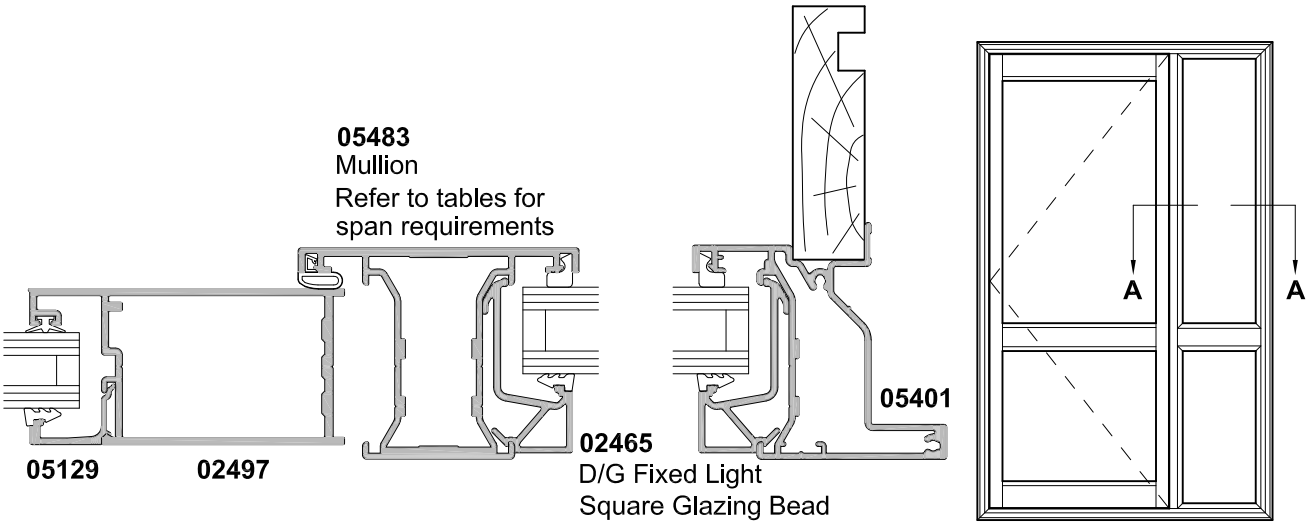

SECTION A-A

DIRECT GLAZING OPTION

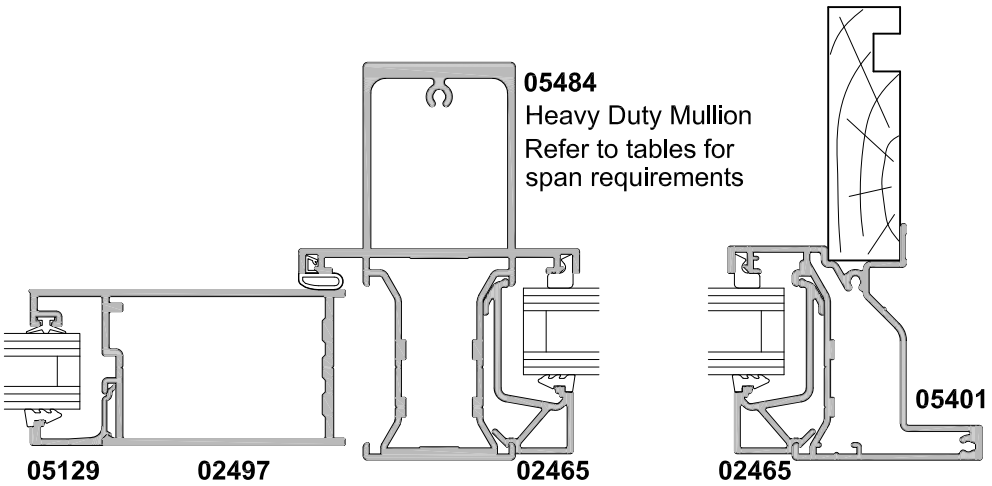

SECTION A-A

HEAVY DUTY SIDELIGHT MULLION OPTION

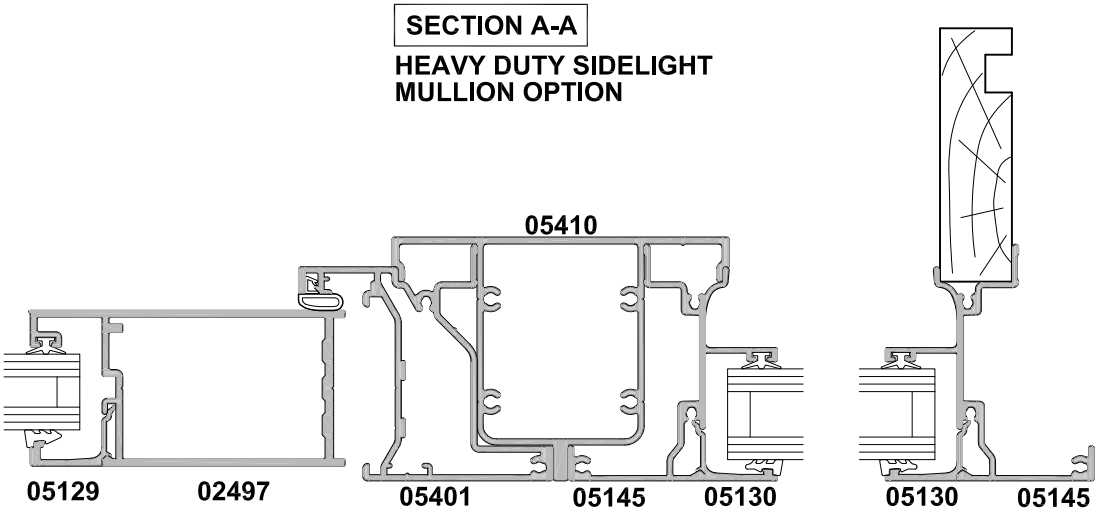

SECTION A-A

COUPLING OPTION

VANTAGE SPECIFIER'S GUIDE © APL Window Solutions. NB. TECHNICAL SPECIFICATIONS SUBJECT TO CHANGE WITHOUT NOTICE.