METRO THERMAL HEART SERIES HINGE DOOR, OPEN IN HINGE OPTIONS

Cad Ref | TMHD13-0 Scale | 1:2 Date | 01.01.24

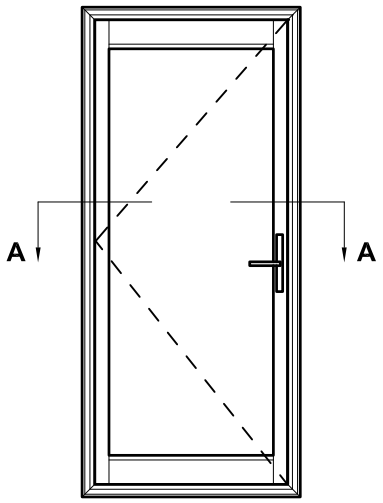

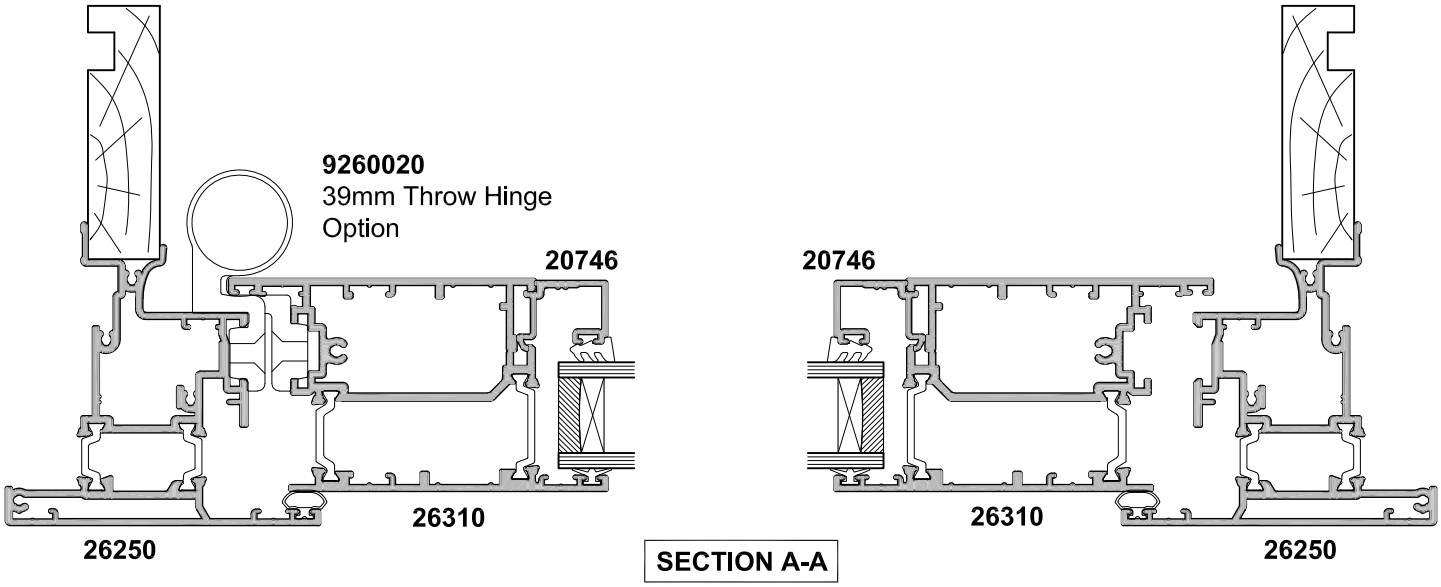

NB: Technical specification subject to change without notice