METRO SERIES
OPEN IN & OPEN OUT
HINGED DOOR TRANSOM OVERLIGHT

CROSS SECTION

CAD REF. VMHD09-0	
DATE 01.06.11	SCALE 1:2

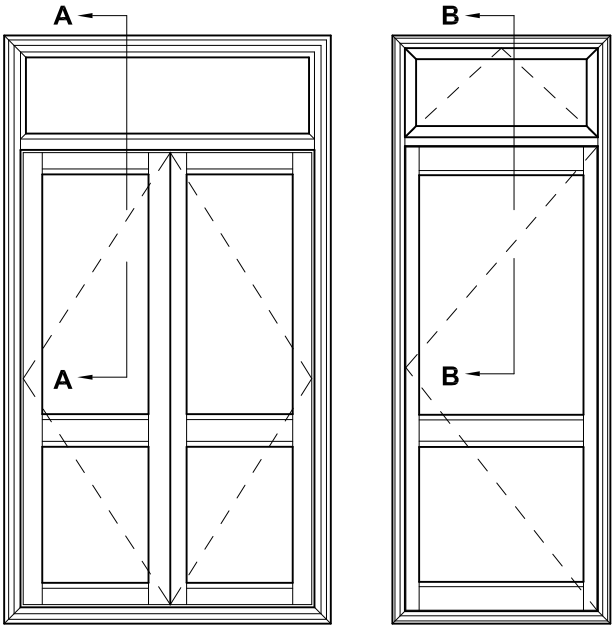

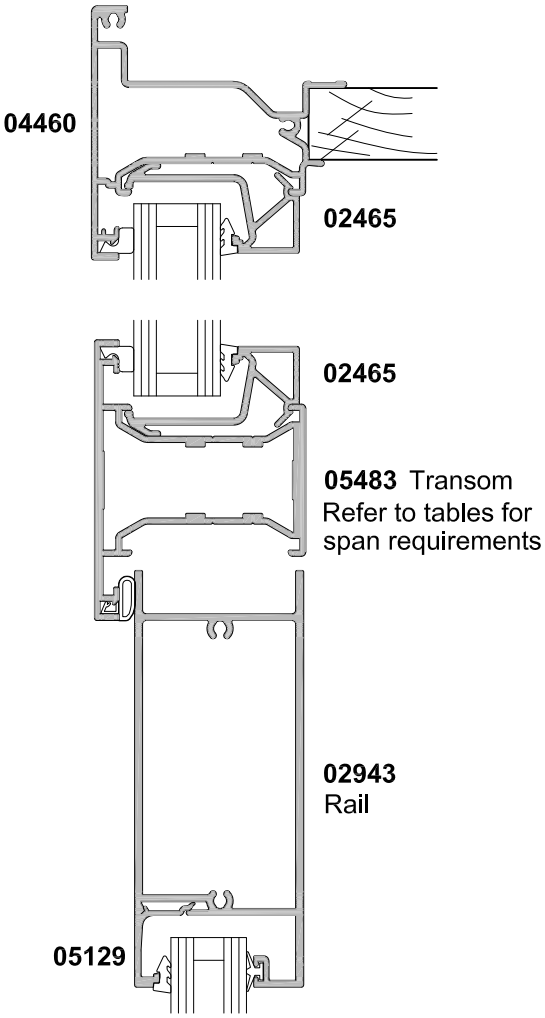

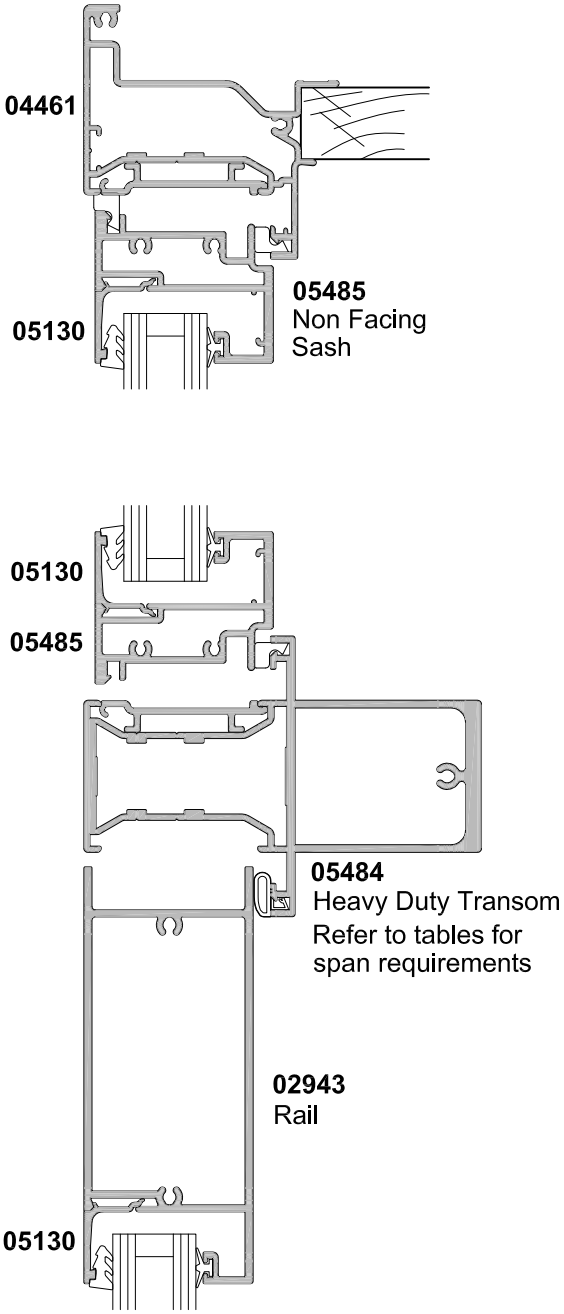

SECTION A-A

DOUBLE GLAZED OPEN IN DOOR

SECTION B-B

DOUBLE GLAZED OPEN OUT DOOR

VANTAGE SPECIFIER'S GUIDE 2011:1 © ARCHITECTURAL PROFILES LTD. NB. TECHNICAL SPECIFICATIONS SUBJECT TO CHANGE WITHOUT NOTICE.