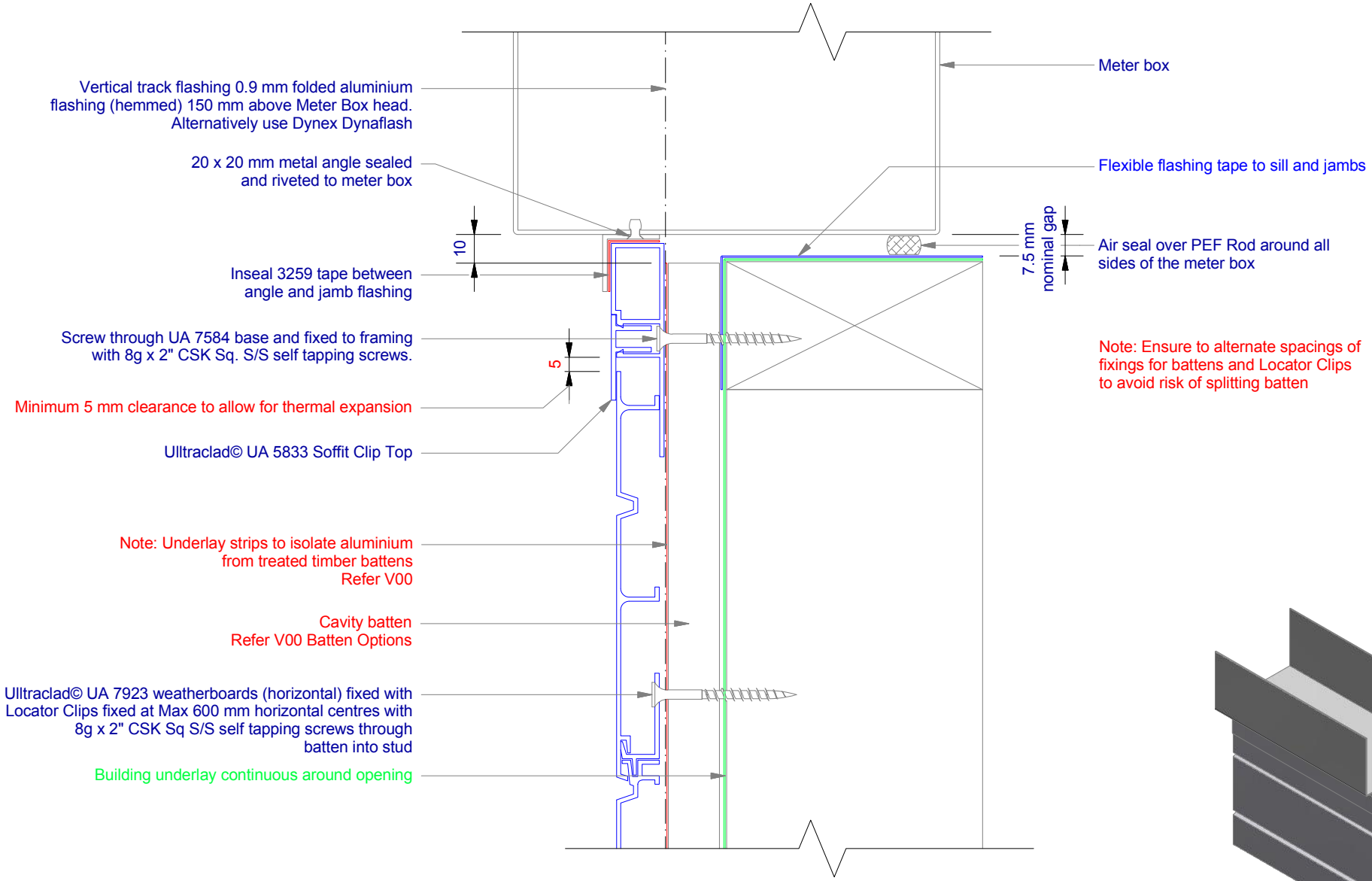

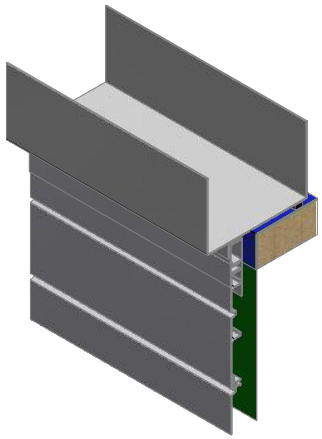

ULLTRACLAD®
ALUMINIUM WEATHERBOARDS

ULLRICH ALUMINIUM CO LTD
PO Box 98 843 Manukau City Auckland 2241
118 Wiri Station Road Wiri 2104 New Zealand
TL 09 262 6262 Ext. 814 Mob 021 541 563
www.ulltraclad.co.nz
© ULLRICH ALUMINIUM - All Rights Reserved

H18

Rev : 10

Meter Box Sill on Cavity

UA 7923 ULLTRALINE BOARD

HORIZONTAL CAVITY SYSTEM

Scale: 1 : 2 @ A4 - 2019

Branz Appraisal #487 2019. (Horizontal)