Vertical track flashing 0.9 mm folded aluminium flashing (hemmed) 150 mm above Meter Box head. Alternatively use Dynex Dynaflash

20 x 20 mm metal angle sealed and riveted to meter box

Inseal 3259 tape between angle and jamb flashing

Screw through UA 7584 base and fixed to framing with 8g x 2" CSK Sq. S/S self tapping screws.

Minimum 5 mm clearance to allow for thermal expansion

Ulltraclad© UA 5833 Soffit Clip Top

Note: Underlay strips to isolate aluminium from treated timber battens Refer V00

Ulltraclad© UA 7922 weatherboards (horizontal) fixed with Locator Clips fixed at Max 600 mm horizontal centres with 8g x 2" CSK Sq S/S self tapping screws through batten into stud

Cavity batten Refer V00 Batten Options

Building underlay continuous around opening

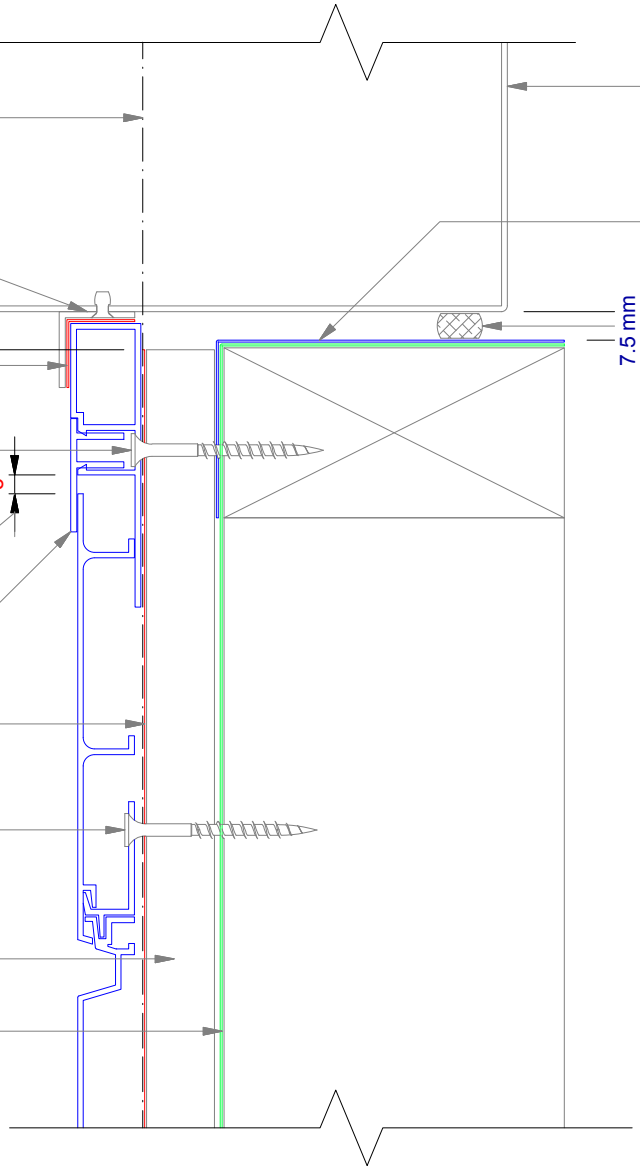

Meter box

Flexible flashing tape to sill and jambs

7.5 mm nominal gap

Air seal over PEF Rod around all sides of the meter box

Note: Ensure to alternate spacings of fixings for battens and Locator Clips to avoid risk of splitting batten

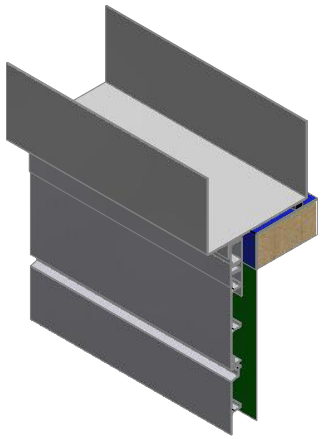

ULLTRACLAD®
ALUMINIUM WEATHERBOARDS

ULLRICH ALUMINIUM CO LTD
PO Box 98 843 Manukau City Auckland 2241
118 Wiri Station Road Wiri 2104 New Zealand
TL 09 262 6262 Ext. 814 Mob 021 541 563
www.ulltraclad.co.nz
© ULLRICH ALUMINIUM - All Rights Reserved

H18

Rev : 10

Meter Box Sill on Cavity

UA 7922 SHIPLAP BOARD

HORIZONTAL CAVITY SYSTEM

Scale: 1 : 2 @ A4 - 2019

Branz Appraisal #487 2019. (Horizontal)