Cavity batten
Refer V00 Batten Options

Ulltraclad© UA 7922 weatherboards (horizontal) fixed with Locator Clips fixed at Max 600 mm horizontal centres with 8g x 2" CSK Sq S/S self tapping screws through batten into stud

Note: Underlay strips to isolate aluminium from treated timber battens
Refer V00

Ulltraclad© Cavity Vent Strip
Alternatively use PVC type

Fixed to lintel at 600 mm centres with 50 x 2.5 mm stainless steel clout

Vertical track flashing 0.9 mm folded aluminiumflashing (hemmed) 150 mm above Meter Box head or inter-storey.
Alternatively use Dynex Dynaflash

Ulltraclad© UA 4533 Head Starter 5 mm diameter drainage holes drilled through base of flashing at 300 mm centres

Aluminium flashing 15° slope
(Note: not supplied with Ulltraclad© system - contractor to supply as additional flashing, Stop end etc.)

20mm x 20mm angle sealed and rivited to meter box

Note: Ensure to alternate spacings of fixings for battens and Locator Clips to avoid risk of splitting batten

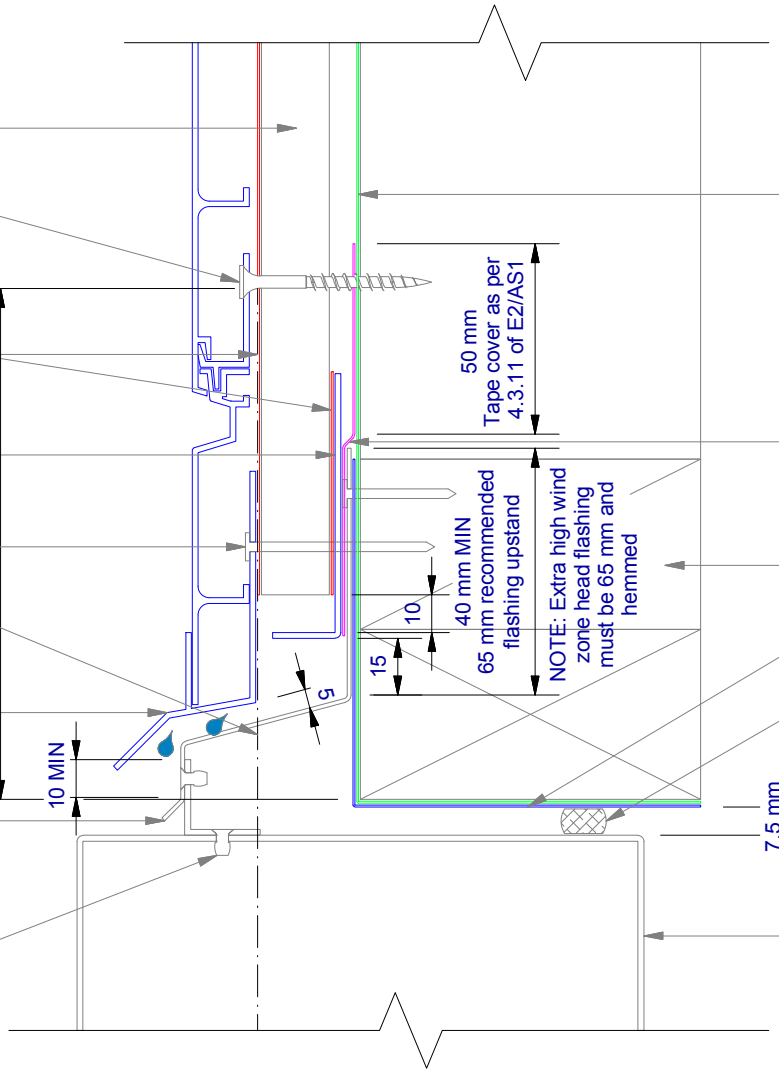

Building underlay continuous behind head flashing and into opening

Flashing tape

Nog as required

Flexible flashing tape at corners

Air seal over PEF Rod around all sides of meter box

Meter box

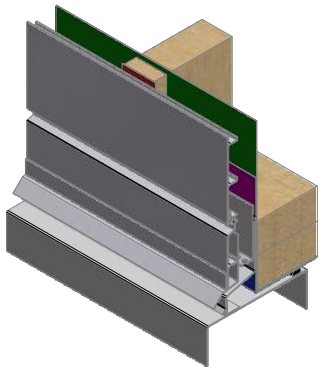

ULLTRACLAD®
ALUMINIUM WEATHERBOARDS

ULLRICH ALUMINIUM CO LTD
PO Box 98 843 Manukau City Auckland 2241
118 Wiri Station Road Wiri 2104 New Zealand
TL 09 262 6262 Ext. 814 Mob 021 541 563
www.ulltraclad.co.nz
© ULLRICH ALUMINIUM - All Rights Reserved

H16
Rev : 10

Meter Box Head on Cavity
UA 7922 SHIPLAP BOARD

HORIZONTAL CAVITY SYSTEM
Scale: 1 : 2 @ A4 - 2019

Branz Appraisal #487 2019. (Horizontal)