Window frame (Note: Refer to window manufacturer for method of supporting and fixing)

Window support bar or window openings wider than 600 mm. Support part to comply with E2/AS1 9.1.10.5(v)

Ulltraclad© UA 5833 Soffit Top Cap clipped into UA 7584 mitred in corners to join with Jamb Alternatively use UA 5832

Note: Ensure to alternate spacings of fixings for battens and Locator Clips to avoid risk of splitting batten

Clearance hole in board larger than screw gauge to allow for thermal expansion

Minimum 5 mm clearance to allow for thermal expansion

Vertical track flashing 0.9 mm folded aluminium flashing (hemmed) 150 mm above window sill. Alternatively use Dynex Dynaflash

Note: Underlay strips to isolate aluminium from treated timber battens Refer V00

Ulltraclad© UA 5059 weatherboards (horizontal) fixed with Locator Clips fixed at Max 600 mm horizontal centres with 8g x 2" CSK Sq S/S self tapping screws through batten into stud

Building underlay continuous around opening

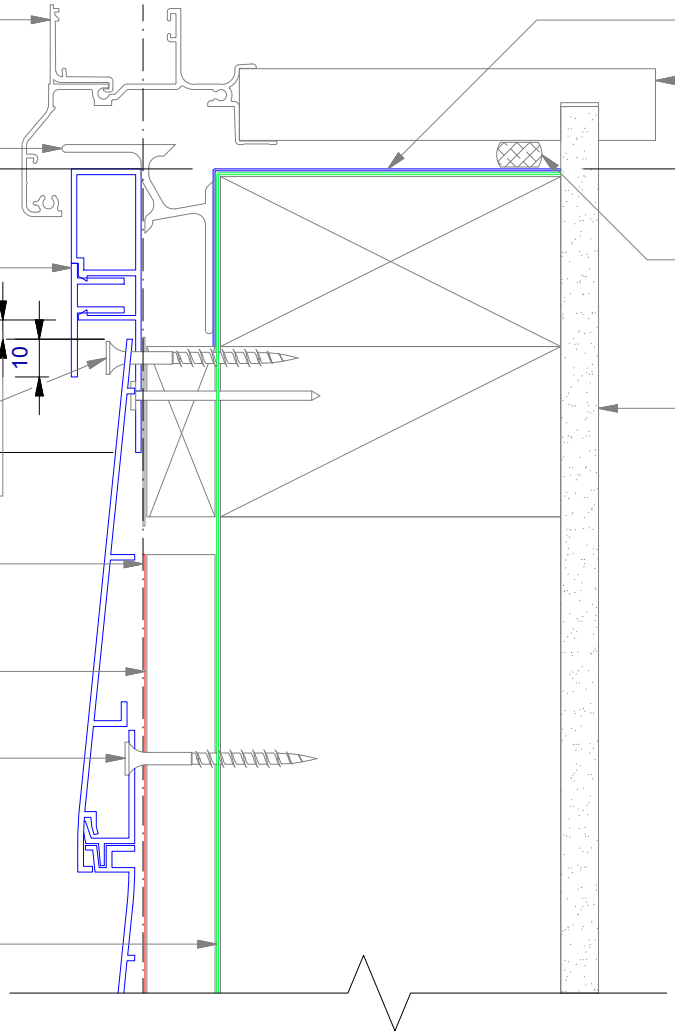

Flexible flashing tape along entire sill. 100 mm up each Jamb and 50 mm onto surface of building underlay

Window liner

7.5 mm nominal gap

Air seal to perimeter of trim cavity with expandable foam or sealant as per section 9.1.6 of E2/AS1

Interior lining

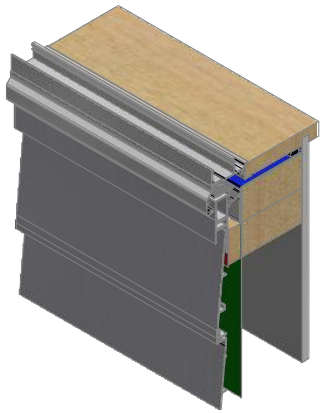

ULLTRACLAD®
ALUMINIUM WEATHERBOARDS

ULLTRACLAD ALUMINIUM CO LTD
PO Box 98 843 Manukau City Auckland 2241
118 Wiri Station Road Wiri 2104 New Zealand
TL 09 262 6262 Ext. 814 Mob 021 541 563
www.ulltraclad.co.nz
© ULLRICH ALUMINIUM - All Rights Reserved

H11

Rev : 10

Window Sill on Cavity

UA 5059 TRADITIONAL BOARD

HORIZONTAL CAVITY SYSTEM

Scale: 1 : 2 @ A4 - 2019

Branz Appraisal #487 2019. (Horizontal)