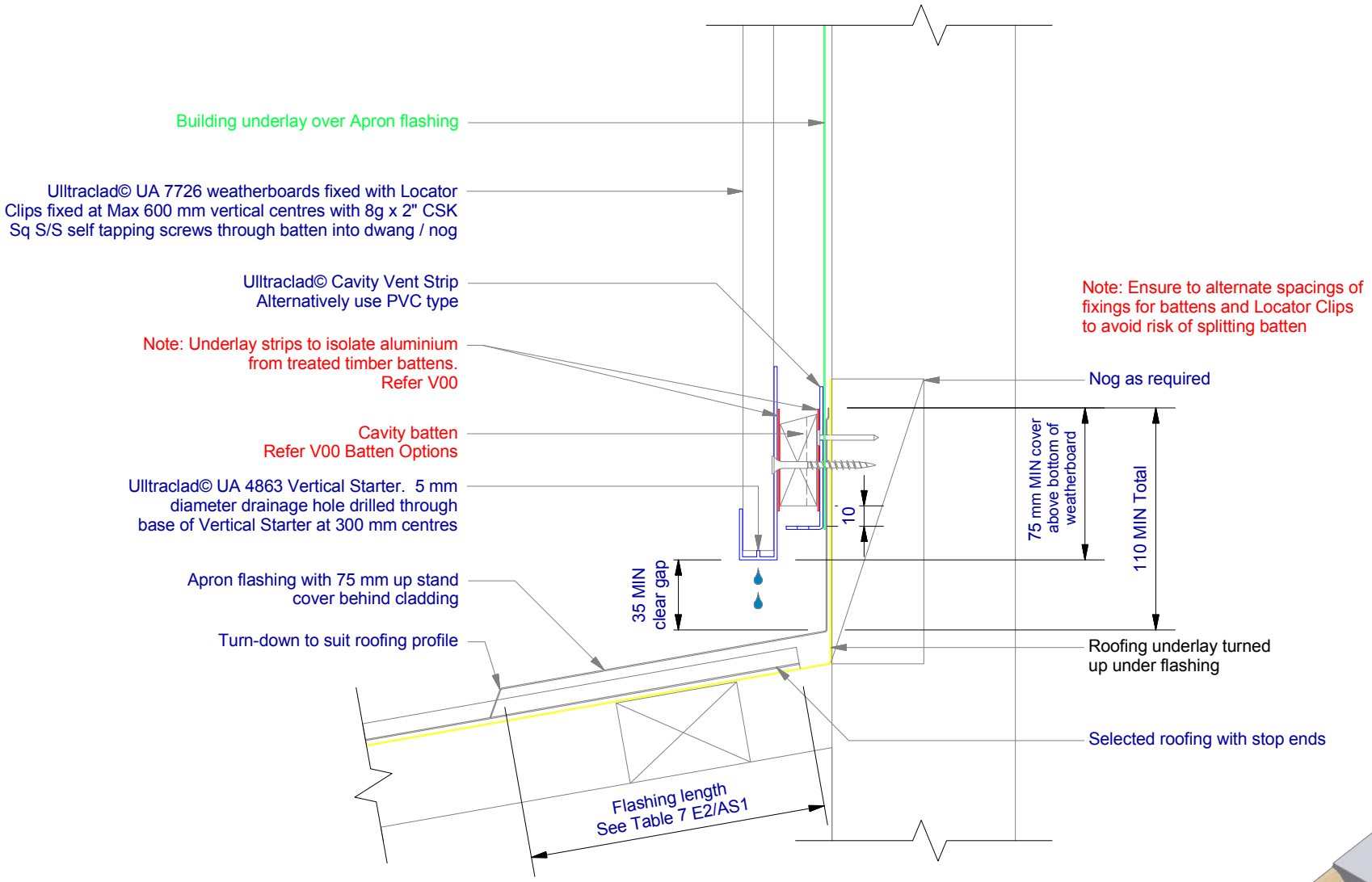

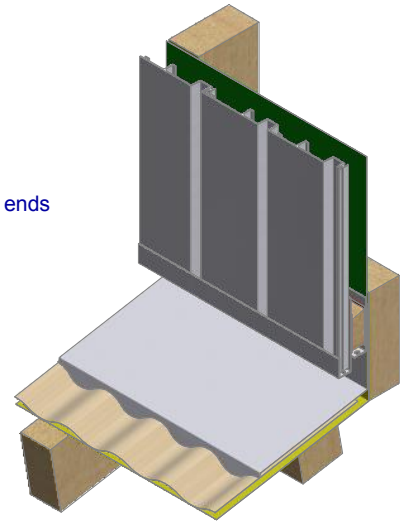

ULLTRACLAD®
ALUMINIUM WEATHERBOARDS

ULLRICH ALUMINIUM CO LTD
PO Box 98 843 Manukau City Auckland 2241
118 Wiri Station Road Wiri 2104 New Zealand
TL 09 262 6262 Ext. 814 Mob 021 541 563
www.ulltraclad.co.nz
© ULLRICH ALUMINIUM - All Rights Reserved

V19

Rev : 10

Roof-Wall Junction on Cavity

UA 7726 SHADO 100 BOARD

VERTICAL CAVITY SYSTEM

Scale: 1 : 3 @ A4 - 2019

Branz Appraisal #796 2019. (Vertical)