MASONS ENVIRO 50MM AAC INTERTENANCY WALL SYSTEM

INSTALLATION GUIDE

MASONS
Designed Smart, Built Tough.

V6.0 Oct 2025

Contents

1. General and product information **2**
2. Scope and limitations **4**
3. Components **5**
4. Planning for construction - considerations **6**
Construction joints 7
Framing 7
Intersections with other building elements 7
Specific design 8
Fastenings and brackets 8
Penetrations and services 8
Fire seals 8
Fire and acoustic sealant 9
Enviro AAC adhesive mortar and joints 10

5. Installation instructions sections **11**
Preparation 11
Step 1: Install first wall frame 11
Step 2: Install the Enviro C channel base 11
Step 3: Install the Enviro fire brackets to the first framing line 12
Step 4: Install Enviro panel 13
Step 5: Install second framing line 14
Step 6: Install Enviro brackets to the other side of panel framing 14
Step 7: Install fire seals 15
Step 8: Install services 16
Step 9: Install insulation 16
Step 10: Install gypsum board wall lining 16

General and product information

PURPOSE

This guide relates to the installation of the Masons Intertenancy Wall System.

IMPORTANT DOCUMENTS

This guide must be read in conjunction with:

- Masons Intertenancy Wall System pass™
- the relevant Masons Intertenancy Wall System details
- Masons Intertenancy Wall System Warranty
- NASH Standard Part 2: May 2019 Light Steel Framed Buildings
- NZS 3604: Timber-framed buildings.

SKILLS REQUIRED

This guide is suitable for use by a licensed building practitioner licensed to the relevant class or by a practitioner who will be supervised by a licensed building practitioner licensed to the relevant class or deemed LBP.

FOR MORE HELP

Technical assistance is available at mpb.co.nz.

While all reasonable efforts have been made to ensure the accuracy of information provided, this guide is a guide only. It may be subject to change.

FOR OUR WARRANTY

Refer to mpb.co.nz.

PRODUCT DESCRIPTION

- The Masons Intertenancy Wall System is an intertenancy acoustic and fire wall system: It is a secondary building element, based on Masons Enviro™ AAC panel – a 50 mm thick panel. It is manufactured from cement, sand, lime and water which is aerated with an expanding agent. Soft blocks are moulded from the mixture and then sliced into the required panel size and cured in a steam pressure autoclave for up to 12 hours.
- Secondary Building Elements designed to separate and protect people from the effects of fire typically require an FRR of -/30/30 or -/60/60.
- Sound Transmission Class (STC) is a measure of permissible sound transmission between adjoining tenancies through a vertical wall. An STC of 55 is the minimum. The higher the STC the less the sound transmission.
- The Masons Intertenancy Wall system has a Fire Resistance Rating of 120/120/120 timber frame and -/90/90 light steel frame with an estimated laboratory acoustic Sound Transmission Class (STC) performance of 64 dB. Where timber framing and lightweight steel framing is used Enviro Fire brackets are added to both sides of the Mason's Enviro panel to the framing on both sides. As the Enviro Fire brackets on the fire side melt, the Enviro panel is disconnected from the collapsing structure and is supported by the Fire Brackets and the structure on the side giving protection from fire for the 120 minutes – timber frame, or 90 minutes light steel frame.

TYPICAL PANEL LAYOUT AND MASONS BRACKET PLACEMENT

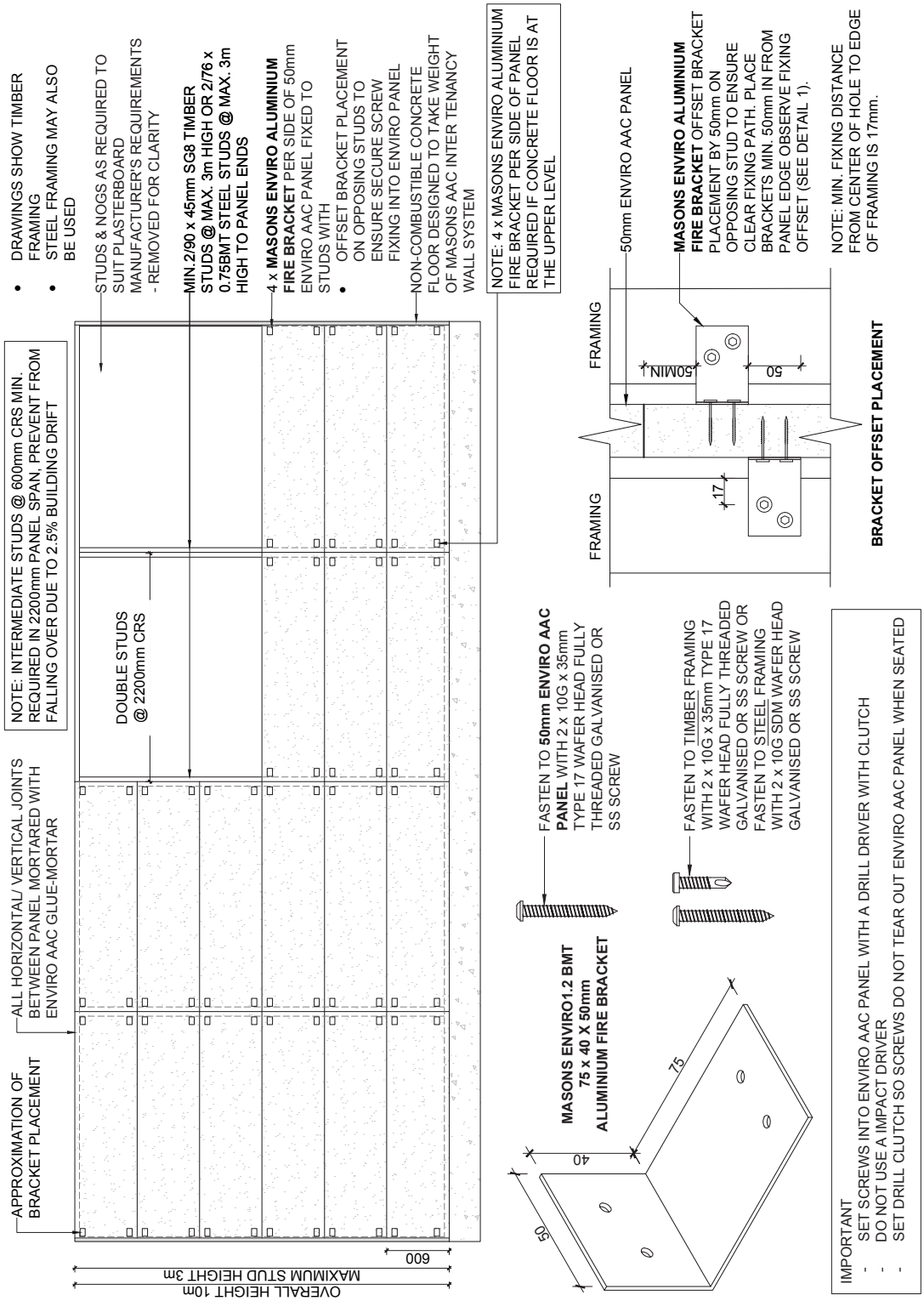

SCOPE AND LIMITATIONS

For scope of use, limitations, conditions and statement of building code compliance, refer to the Masons Intertenancy Wall System pass™.

Pre-installation

HEALTH AND SAFETY

Take all necessary steps to ensure your safety and the safety of others:

- Ensure mechanical ventilation is used when cutting or drilling
- Ensure the timber and steel are well supported when cutting and fixing
- Wear appropriate safety equipment, clothing and footwear
- Use all tools in accordance with relevant instruction manuals
- Plan and monitor a safe approach for working at height; select and use the right equipment
- Designate a disposal area for all sharp metal off-cuts
- Clear the work area of any obstruction before work starts.

For further information refer to:

- WorkSafe. [July 2018] Small Construction Sites, the Absolutely Essential Health and Safety Toolkit.
- WorkSafe. [December 2016] Health and Safety at Work, Quick Reference Guide.

These documents are available at worksafe.govt.nz.

HANDLING AND STORAGE

Correct handling and storage of Masons Intertenancy Wall System components are critical for best performance, ease of use and warranty adherence. All components handle and install best dry.

Handling

Lift Masons Enviro™ AAC panels by the long edge, carrying a panel between two people. Unload panels as close as possible to the installation area. Use trolleys or other mechanical devices where this is not possible.

Take care handling the panels to avoid damage to edges and surfaces.

Other products must be handled in accordance with the component product manufacturer or supplier requirements.

Keep panels dry for easier lifting and handling when installing.

Storage

Masons Enviro™ AAC panel packs must only be stacked one pack high and must be properly supported on level ground.

Mineral wool insulation and Masons Enviro™ AAC adhesive mortar must be stored dry and covered.

Other products must be stored in accordance with the component product manufacturer or supplier requirements.

TOOLS AND EQUIPMENT REQUIRED

Install the Masons Intertenancy Wall System using standard carpentry tools and equipment. A circular saw fitted with a Diamond Tipped cutting blade and dust extraction with relevant classed vacuum, or a sabre reciprocating saw with a demolition blade.
Important: Use a drill with torque clutch to seat the screws into the Enviro panel.

Use tools in accordance with good trade practice and supplier's instructions.

Use protective equipment when cutting panels, as Masons Enviro™ AAC panels contain crystalline silica or silica dust. Equipment must include P1 or P2 dust masks, protective glasses or goggles, earplugs or earmuffs, gloves, long sleeves, pants and protective footwear.

COMPONENTS

The following components are supplied by MASONS:

Enviro™ 50mm AAC Panel and Enviro™ C Channel and Fire Brackets

ENVPAN	50mm Enviro AAC Panel 2200mm x 600mm
CCHANNEL	Galvanised Steel C-Channel 3048mm long (35x51x35)
RANGLEBKT	Aluminium Bracket 75mm x 45mm x 50mm

Fixings

WAFERHEADSCREW35	10G x 35mm TYPE 17 Wafer Head Fully Threaded Galvanised or SS Screw (timber framing/enviro AAC panel)
	10G SDM Wafer Head Galvanised or SS Screw (steel framing)

Fire seal void filler

MINWOOL50	Mineral Wool Insulation 50mm x 1200mm x 600mm

Fire and acoustic sealer

FIRECRYL310	Firecryl Sealant Acrylic Sealant 310ml White
FIRECRYL310	Firecryl Sealant Acrylic Sealant 600ml Grey

Panel mortar

PBEJG25kg	Enviro Panel Jointing Glue 25kg

The following components are supplied by OTHERS:

Wall Insulation

Non combustible insulation such as glass fibre batts of equivalent R2.0 minimum

Framing

Structural framing - Double - 2/90 x 45 mm SG8 timber studs at 2.2 m centres or double - 2/76mm x 0.7BMT steel studs
Intermediate framing - as required to support gypsum board wall lining
Cold Galv spray to seal cut ends of steel reinforcing in Enviro panel
M8 x 75mm DynaBolt™ Plus or M8 x 80mm AnkaScrew™ Xtrem™ Screw In Anchor

General and Planning for Construction

- Masons Enviro 50mm AAC IT wall is installed in stack bond pattern and is supported between two lines of framing.
- One side of the supporting framing is erected first. Enviro aluminium fire brackets are placed and fixed to the first framing line to the correct pattern. The Enviro panel is mortared together and fixed to the framing line using Enviro Aluminium fire brackets and screws supplied. Minimum fixing distances from studs or panel edges must be observed. brackets must be off set to ensure clear fixing paths.
- Once the wall is erected to the designed height and secured to the first framing line, the second line of framing can be installed. The Enviro IT wall can then be secured using Enviro fire brackets and screws to the second line of framing.
- The builder erecting framing needs to coordinate closely with the contractor fixing the IT wall to avoid delays and wasted time. Also note the frame set out is non standard.
- Typically the IT wall will be constructed against the first framing line to full height before installing the second framing line. However, construction floor by floor is also possible.

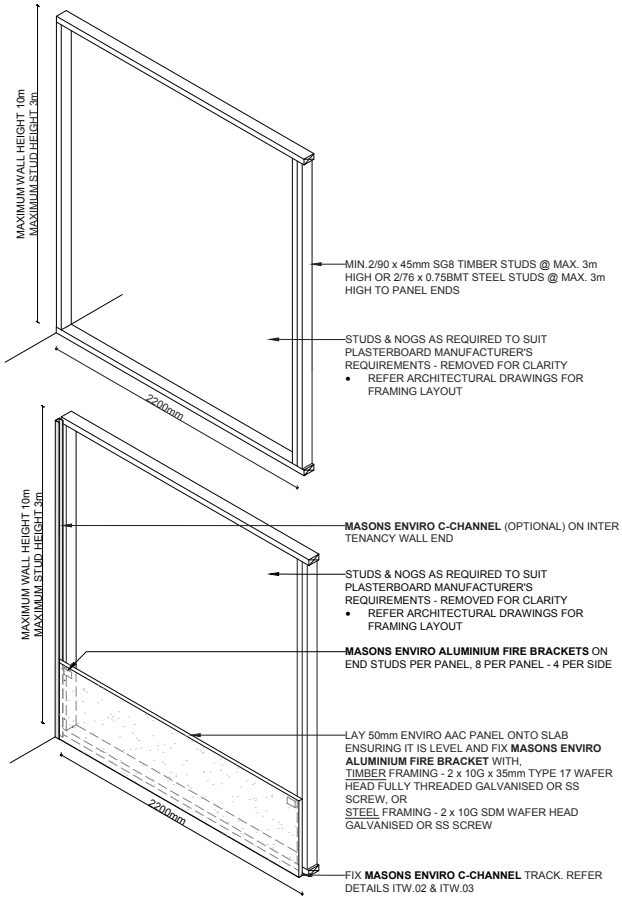

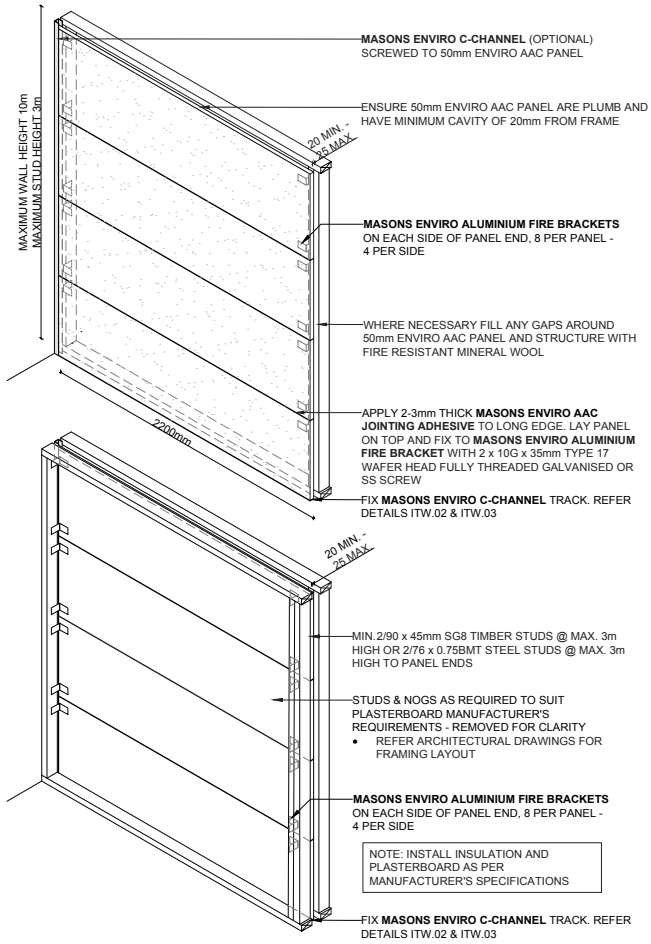

CONSTRUCTION JOINTS – EXPANSION AND CONTRACTION.

- Plan for any construction joints and ensure there is sufficient supporting framing and correct positioning of the Enviro brackets support the joint. A minimum of one horizontal construction joint should be installed at a maximum of every 10th 600 mm wide panel high, or 6 m spacing, in or near a mid floor.
- A vertical construction joint should be considered at every 4th 2.2 m panel laid horizontally or 8.8 m spacing. A construction joint is required after every 5th 2.2 m panel or a maximum of 11 m spacing. See specific details.
- Construction joints must be filled with a minimum 10mm x 15mm bead of Soudal Firecryl to each side of the panel over PEF rod or a strip of Mineral wool placed to ensure correct sealant joint size. – See Enviro IT Wall details.

INTERSECTING OTHER BUILDING ELEMENTS

- Plan for where the IT wall terminates against other building elements ensuring there is sufficient framing and all voids are filled with Mineral Wool. - See Enviro IT Wall details.

FRAMING

- Maximum stud height is 3 M and maximum over all framing wall height is 10 M. A 1m cantilever or extension of up to a 3 M stud is allowed where required.
- The system requires double studs – 2/90x 45 mm SG8 timber studs at 2.2 m centres or double -2/76 mm x 0.7BMT steel studs to suit the length of the Enviro panels. Intermediate framing between the double studs should be provided to suit the requirements of the gypsum board wall linings.
- Plan for construction joint placement, and studs required at intersections with other building elements when detailing or setting our framing.-See Enviro IT wall details.

MASONS 50MM ENVIRO AAC PANEL SETOUT - MULTI STORY

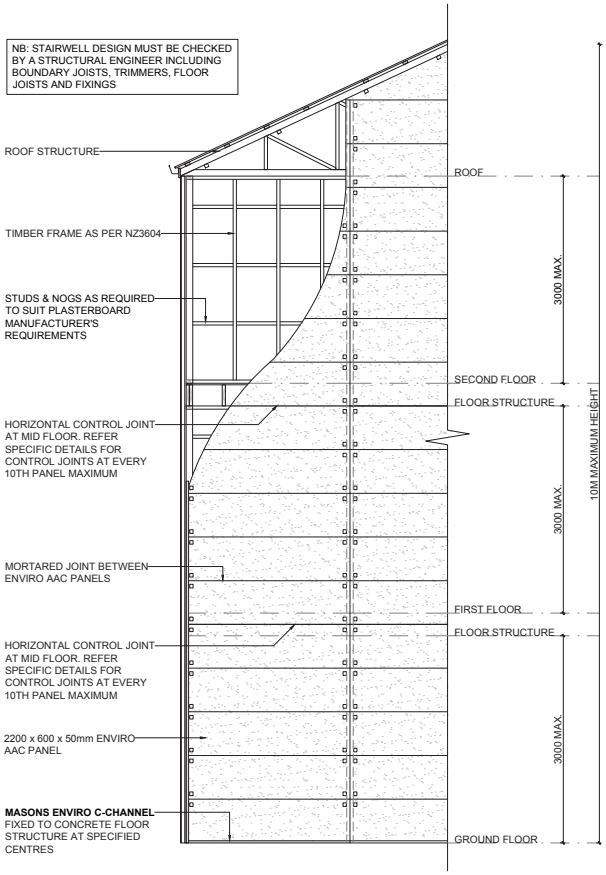

SPECIFIC DESIGN

- Earthquake movement, joints, and stair wells adjacent to the Enviro Intertenancy wall may require specific design and should be checked by a structural and or fire engineer. Design should be checked by suitably qualified persons.

FASTENINGS AND BRACKETS

- Use only the designated screw fixings and Enviro aluminium fire brackets as supplied by Masons. Observe the correct bracket placement. Use four brackets on each side of the panel fixed a minimum of 50 mmm in from the top or bottom of panel edge. Brackets should be offset by 50 mm from each other on opposing sides of the panel. - See Enviro IT wall details.
- **Do not over drive screws into the Enviro panel, use a drill with torque clutch on the lowest setting. Do not seat screws in Enviro panel with an impact driver.**

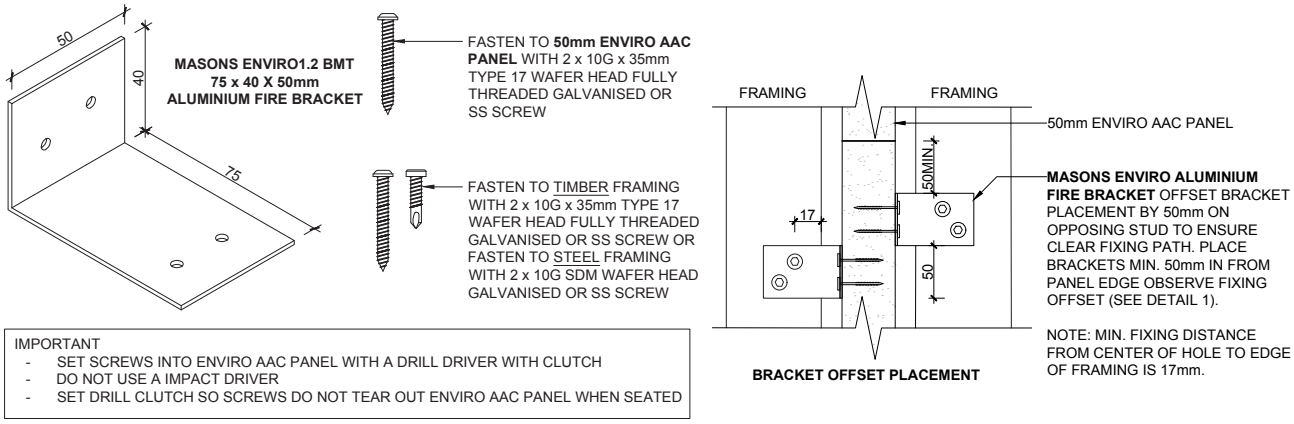

PENETRATIONS

- Penetrations to the Enviro AAC Intertenancy Wall should be avoided. Penetrations are outside the scope of the Masons 50 MM Enviro AAC Intertenancy Wall design and compliance documents.
- Any penetration should be designed, supplied, installed and signed off by a suitably qualified fire design or protection professionals. Masons is not responsible for the fire resistance, structural or acoustic performance of any penetrations to the Intertenancy Wall.

SERVICES

- Small diameter services may be run in the 20 mm air gap between the Enviro panel and the framing.
- Services MUST NOT touch Enviro fire brackets or bridge the Enviro Panel and framing as this will degrade acoustic separation. Fix small diameter services such as conduits or water pipe with suitable fixings to the framing avoiding brackets.
- Masons is not responsible for any downgrading of acoustic performance due to incorrect installation of services.

FIRE SEALS

- Voids where the Enviro Intertenancy Wall terminate against roof cladding or at the exterior framing – cladding line, or at intersection with other building elements use non-combustible mineral wool compressed a minimum of 10 % to fill any voids to provide a fire seal. - See Enviro IT Wall details.

PITCHED ROOF AND PARAPET JUNCTION

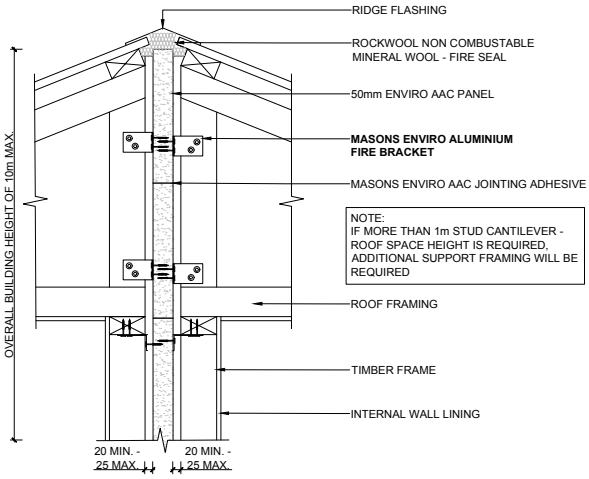

PITCHED ROOF JUNCTION

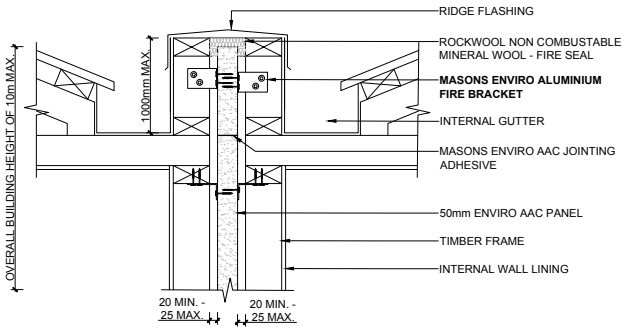

ROOF PARAPET JUNCTION

NIB WALL AND INTERSECTION WITH CLADDING

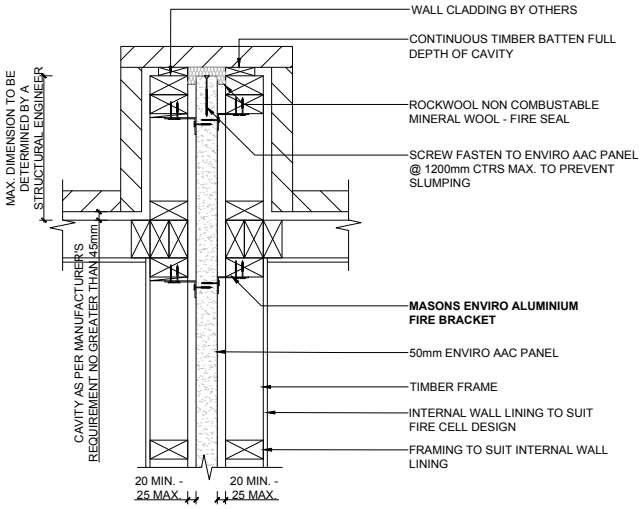

'NIB' JUNCTION

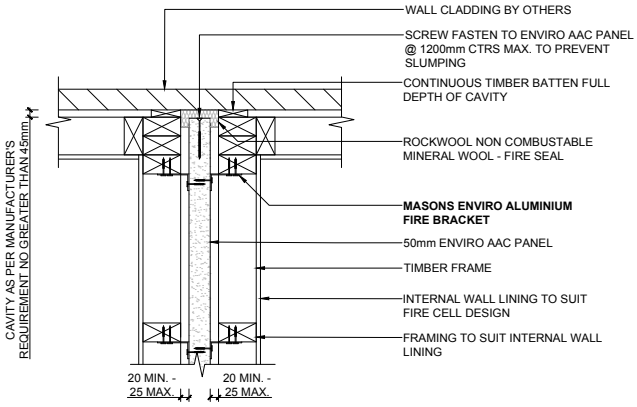

INTERSECTION WITH CLADDING

FIRE AND ACOUSTIC SEALANT

- Soudal Firecryl 240 minute fire and acoustic acrylic sealant should be used either side of the Enviro C channel to seal the channel to the floor.
- Soudal Fireycryl may optionally be used to seal penetrations through, and fittings to the Gypsum board wall lining. This is not a requirement.
- Soudal Firecryl may optionally be used between the wall linings and the wall framing to provide additional acoustic separation. This is not a requirement.
- Construction – expansion joints are filled on both sides of the Enviro panel with Soudal Fircryl over PEF rod, PEF rod needs to be approx. 30% compressed and placed to allow a minimum sealant section of 10mm x 10mm to both sides of the panel. See Enviro Intertenancy wall details
- Soudal Firecryl is supplied by Masons. It may also be obtained from anywhere Soudal products are sold. **DO NOT SUBSTITUTE**.

MID FLOOR EXPANSION JOINT

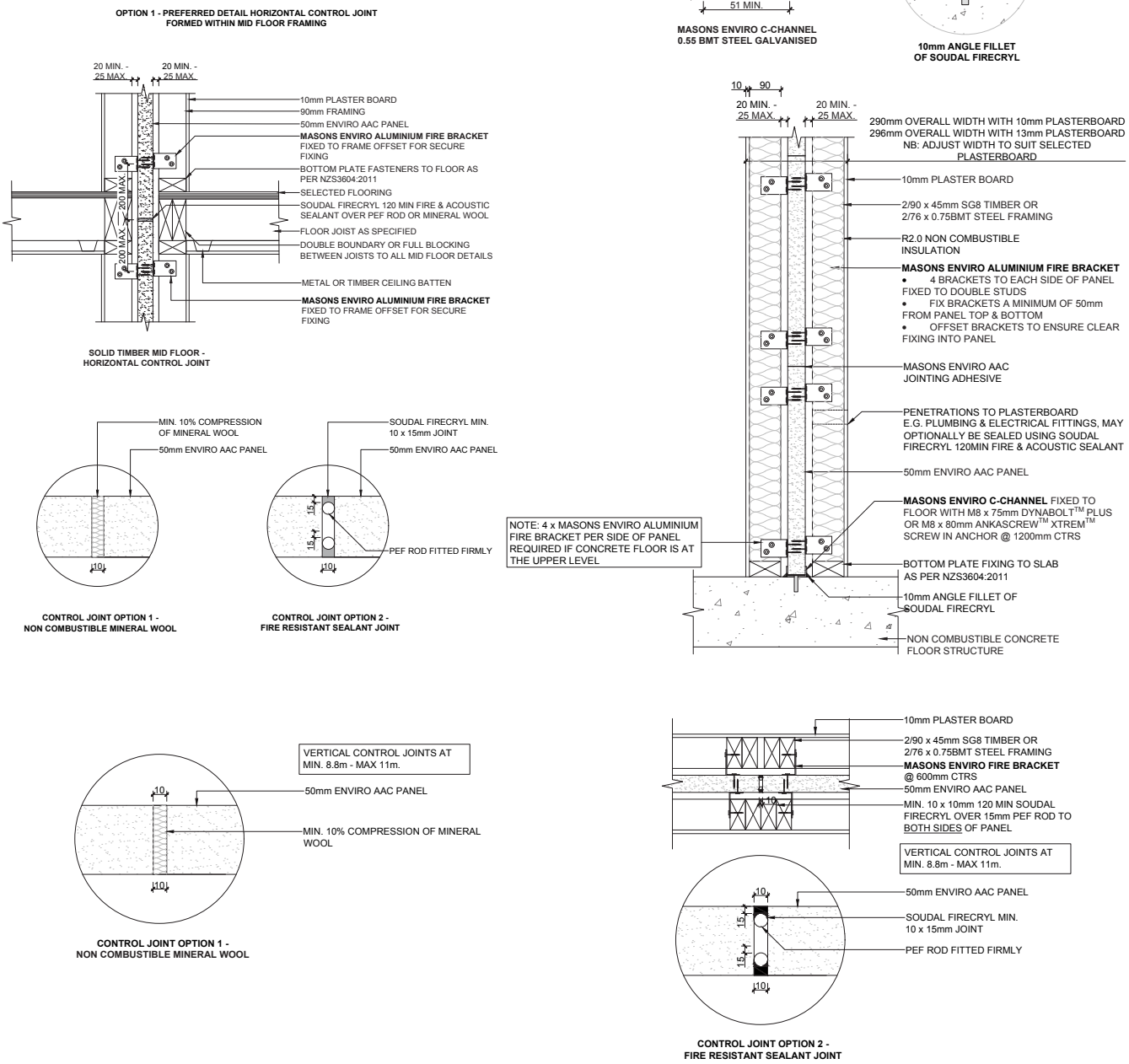

ENVIRO AAC ADHESIVE MORTAR

- Ensure there is a supply of clean water and a suitable area for mixing the mortar. Protect skin and eyes, and avoid ingesting or breathing in any dust from the dry mortar mix when opening and mixing.
- Mix The mortar according to the instructions on the 25 KG bag.
- Apply the mixed mortar slurry to the edges of Enviro panel and place the adjacent panel so some mortar is expressed from the joint. The mortar should applied, and panels placed so is there is a continuous mortar joint between panel edges of approximately 3-5 mm with no gaps. There must be no light visible through these mortar joins.

Installation

PREPARATION

Building consent documentation

Access and view the building consent documentation. Ensure NZS 3604:2011 and NASH Standard Part 2: May 2019 Light Steel Framed Buildings are available for reference.

Primary structure (excluding Masons Intertenancy Wall System)

Ensure the framing of the primary structure is straight and true and within framing tolerances as described in section 2 and Table 2.1 of NZS 3604:2011 or section 2.5 and Appendix A of NASH Standard Part 2: May 2019 Light Steel Framed Buildings.

Prepare Masons Enviro™ AAC panels

Masons Enviro™ AAC panels can be cut to the required length using power or hand tools with a diamond-impregnated cutting blade.

INSTALLATION

Step 1: Details

Access and view the relevant Masons Intertenancy Wall System details in the building consent documentation or from Masons NZ Ltd.

Install first wall frame

The Masons Intertenancy Wall System has one wall frame on each side of the Masons Enviro™ AAC panel.

Install one of the wall frames. Ensure the framing is straight and true and within framing tolerances as described in section 2 and Table 2.1 of NZS 3604:2011 or section 2.5 and Appendix A of NASH Standard Part 2: May 2019 Light Steel Framed Buildings.

If required, install temporary bracing to the wall to keep the wall straight and plumb during installation of the Masons Enviro™ AAC panels.

Check the building consent plans for any applicable building services. Services may be run in the gap between the Masons Enviro™ AAC panel and the framing, but the services must not touch the panel or the brackets to ensure sound transfer is prevented.

Penetrations are not permitted unless these are specifically fire engineered.

Step 2: Install the Enviro C channel base

Measure 19mm from the frame to the edge of the Enviro C channel, and Install the Enviro Galv Steel C channel to concrete floor using M8 x 75mm DynaBolt™ Plus or M8 x 80mm AnkaScrew™ Xtrem™ Screw In Anchor @ 1200mm centres. Ensure this is parallel to the frame and 20 mm panel to frame gap is maintained.

Pack level if necessary. Ensure all gaps are filled and a bead is applied down each side of the C channel with Soudal Firecryl.

Step 3 Install the Enviro fire brackets to the first framing line

Measure up and mark 500mm from the floor level and place the lower edge of the Enviro Fire brackets for the first layer of panel. Fix to the studs using 2 x 10G head fastener supplied for either timber 35mm or steel studs 20mm. The C channel holds the panel base so no brackets are necessary at the base of the first run of panel, only if the concrete floor is on the ground level, fixing centers must be 17mm from the stud edge. If the concrete floor is at the upper level, 2xbrackets are still required per side at the base of the first run of panel (8 in total per panel - both sides).

- Brackets must be placed so they are minimum of 50mm in from the top or bottom of the panel.
- Enviro panels are 600mm high, 2200mm long x 50mm thick.

With this in mind, set out for the next few x rows of Enviro panel and place and screw fix the brackets to the studs. Allow 4 brackets per panel side (8 in total per panel – both sides). These can be adjusted later if required.

TYPICAL PANEL LAYOUT AND MASONS BRACKET PLACEMENT

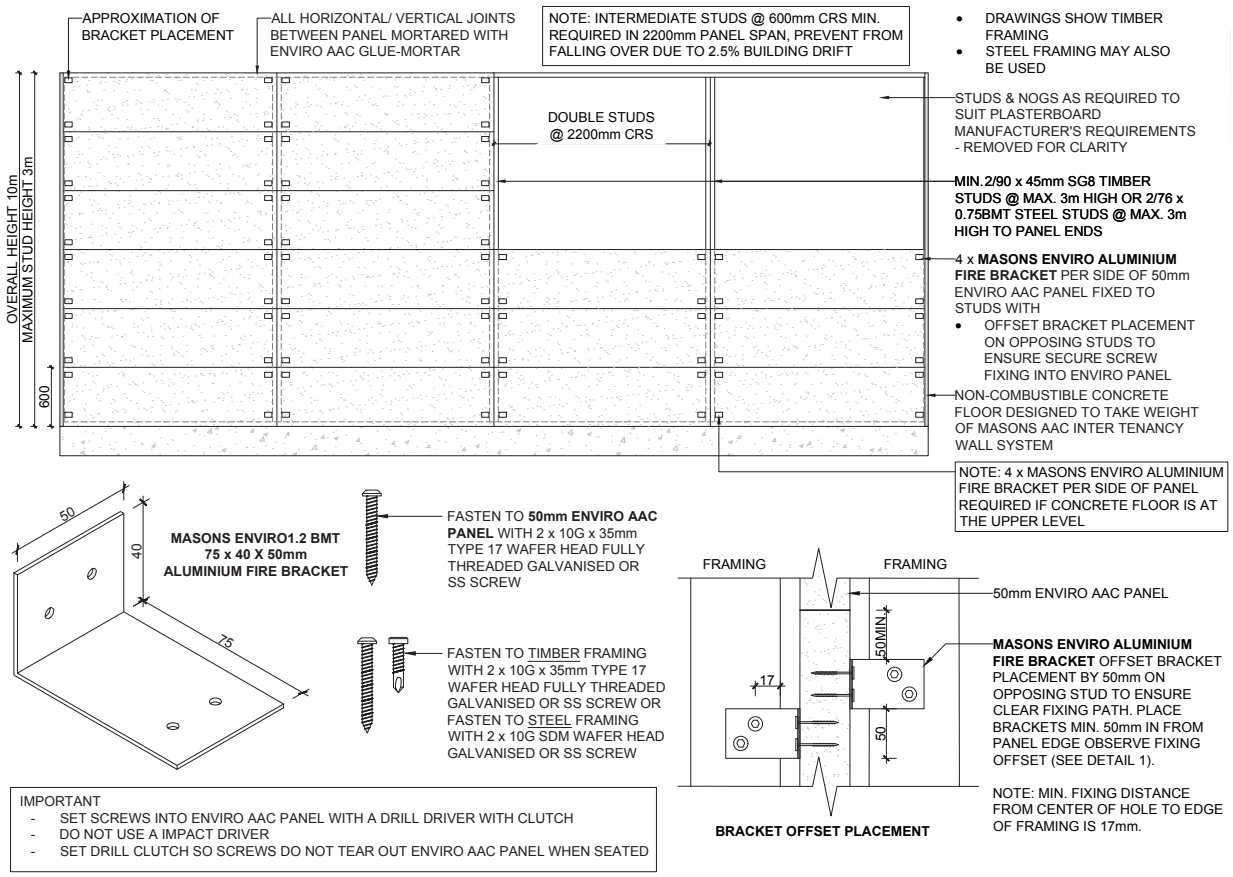

Step 4: Install Enviro panel

Plan and determine which end or double stud - 2/90 x45 SG8 or 2/76 x .075BMT Galv steel studs to start from to minimise cutting and waste.

Slot first row of Enviro panel into the C channel fixed to the floor. Fasten panel to pre-placed Enviro fire brackets using the correct fastening provided for the stud type. Ensure there is a 20 mm gap between the panel and the fist frame.

Mortar all panel-to-panel joints using Enviro AAC adhesive mortar. Check level and plumb. Adjust as necessary.

If Enviro C channel is being used to trim the vertical panel end (optional) at the end of the IT wall run, consider installing the first vertical C Channel section now. This may be friction fitted, screwed nailed into place. Continue to install vertical C channel to the IT wall end as panel installed vertically.

Continue to install Enviro panel in a stack bond pattern to the first framing line ensuring all panels are well mortared together, that there are 4 Enviro fire brackets per panel side fixed to the double studs amin 50 mm in from the panel top-bottom edges. Continue to check level and plumb and adjust as required.

Install panel up the first frame to the planned height, and horizontally as required. Installation may be completed in stages as suits the contractors or build.

ENVIRO ALUMINIUM FIRE BRACKET LAYOUT

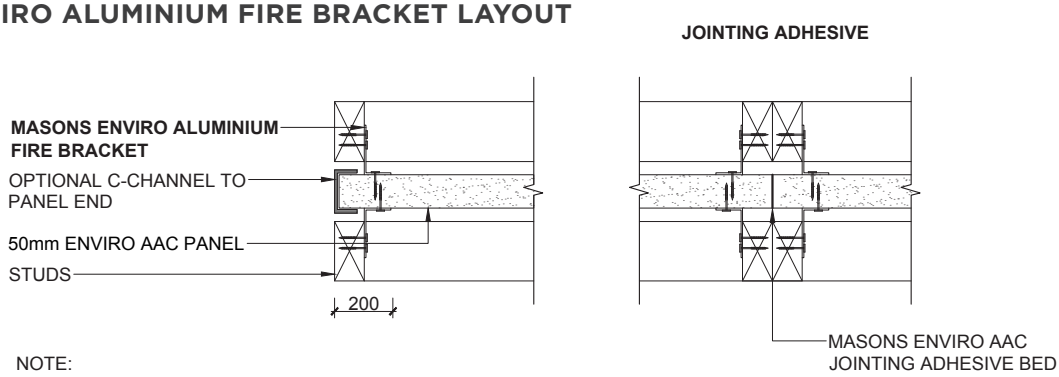

NOTE:
- USE APPROPRIATE FIXING FOR CORROSION ZONE
- MAXIMUM SPACING FOR ANGLE BRACKETS REFER TO FIXING TABLE

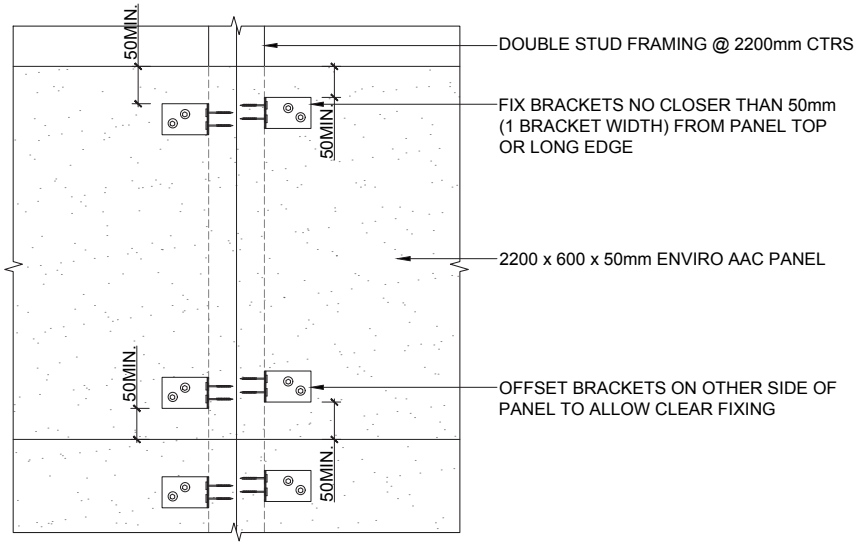

CONTROL JOINT BRACKET PLACEMENT

Step 5: Install second framing line

Install the second wall frame. Ensure the framing is straight and true and within framing tolerances as described in section 2 and Table 2.1 of NZS 3604:2011 or section 2.5 and Appendix A of NASH Standard Part 2: May 2019 Light Steel Framed Buildings.

Ensure the air gap of 20 mm has been maintained. Adjust the framing if necessary.

Check the building consent plans for any applicable building services. Services may be run in the gap between the Masons Enviro™ AAC panel and the framing, but the services must not touch the panel or the brackets to ensure sound transfer is prevented.

Step 6: Install Enviro brackets to other side of panel framing

Install remaining Enviro brackets through the second framing line securing the Enviro panel to the double studs with the supplied screws. Off set brackets slightly from those on the other side of the Enviro panel to avoid fouling. Ensure the correct number of brackets has been used per panel and all screws have been fixed off.

OVERALL DIMENSION

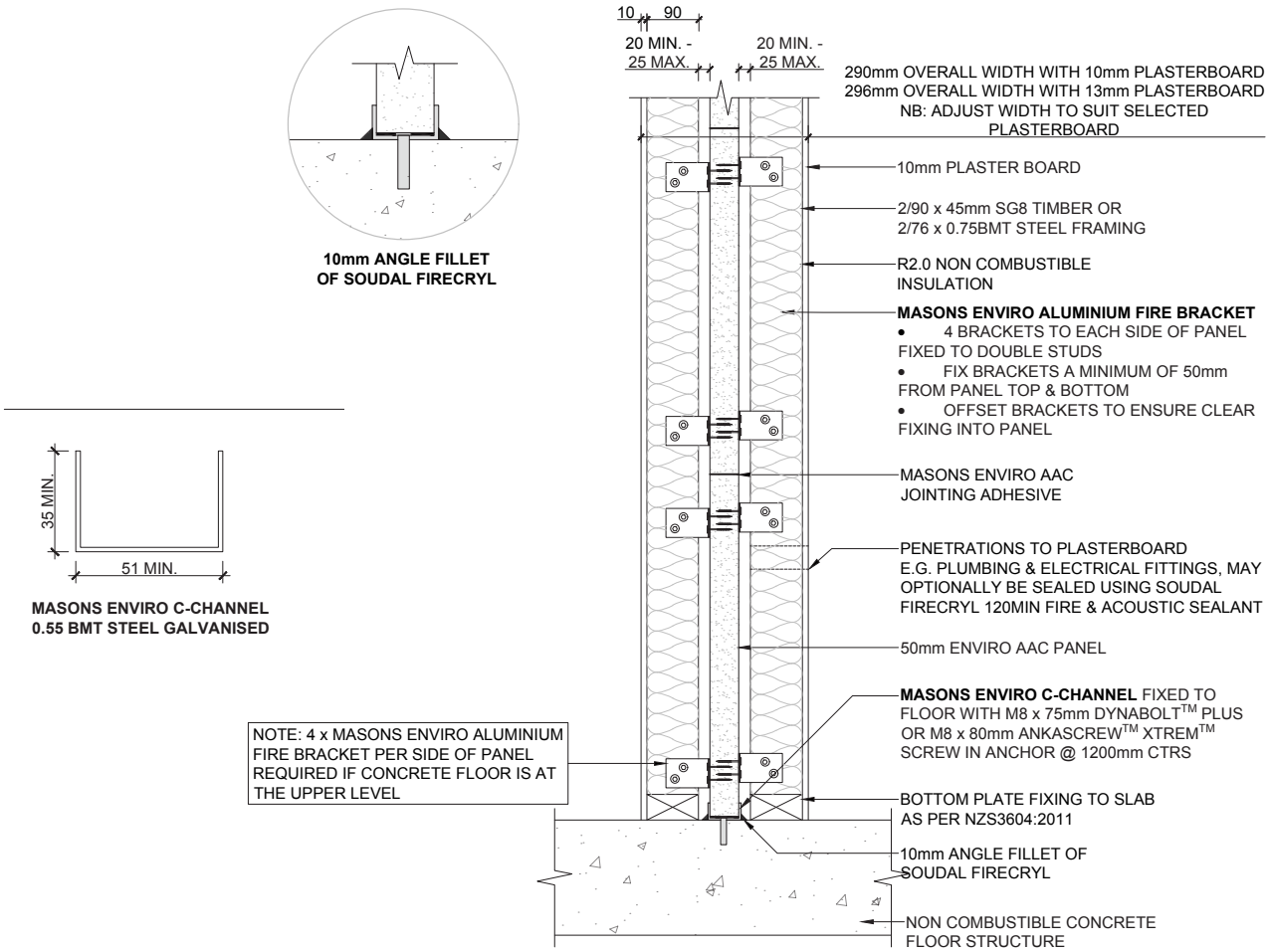

Step 7: Install fire seals

Install Rockwool mineral wool to all voids or gaps between the Enviro Intertennacy walls and adjacent building elements such as roof cladding, and intersections with exterior wall framing. See the specific Enviro 50 MM AAC Intertenancy Wall details and follow these.

Do not proceed to the next installation step before checking and ensuring all fire seals are in place.

Mineral wool is installed with minimum 10 % compressed for a friction fit It is acceptable to glue or pin in place with suitable fixings. There MUST BE NO GAPS or deformation of the mineral wool of any fixings are used.

NIB WALL AND INTERSECTION WITH CLADDING

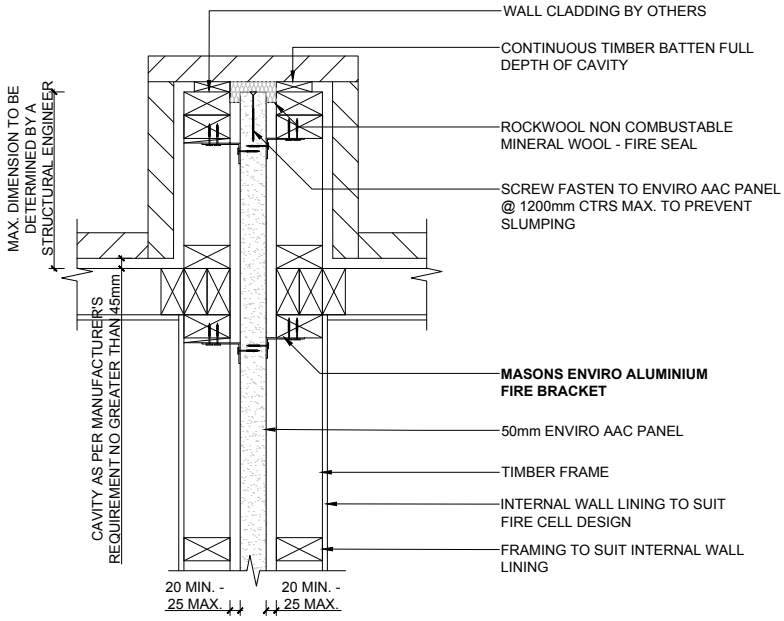

'NIB' JUNCTION

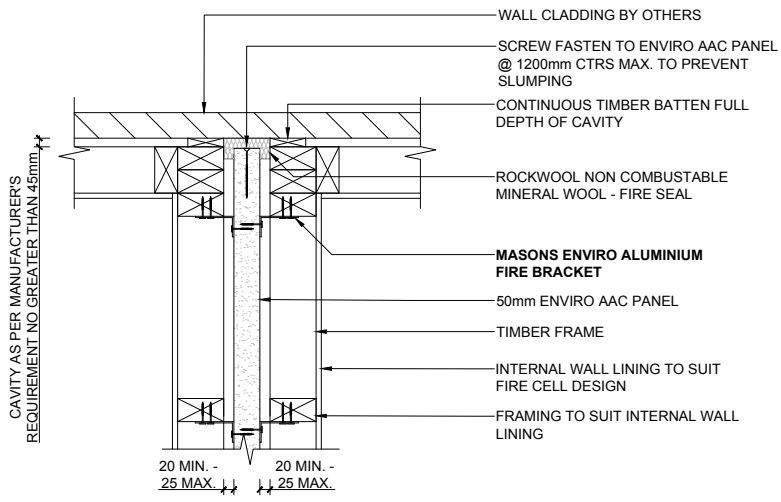

Step 8: Install services.

Install small services in the 20 mm air gaps between the panel and the frames. These MUST NOT touch the brackets or panel.

Step 9: Install insulation.

R2.0 or greater non-combustible insulation. Glass fibre batts properly sized and installed insulation should not require restraint. But, if necessary, prevent insulation from sagging into the cavity using polypropylene strapping before fitting the wall linings.

NOW recheck all fire seals are in place and have not been disturbed by sub trades.

Step 10: Install gypsum board wall lining.

DISPOSAL OF WASTE

Enviro™ AAC panel should be disposed of at a concrete recycling facility.

COMPLETION

Check to ensure all components and the required number are installed correctly and in accordance with Masons Intertenancy Wall System requirements.

Complete the Masons Intertenancy Wall System Installation Record.

Ensure all information is available for the building owner to maintain the Masons Intertenancy Wall System, including information from the selected plasterboard supplier.

MAINTENANCE

The Masons Intertenancy Wall System requires minimal maintenance. Maintain the plasterboard in accordance with the selected plasterboard supplier's requirements.

Step 11: Install plasterboard

Install plasterboard in accordance with the selected plasterboard supplier's requirements.

Check the building consent for any wall bracing requirements. Plasterboard fixing may vary depending on wall bracing or a non-bracing design.